Analyzer Repair Inc.

Test Equipment Repair & Calibration

HP-8566A

HP 8566A Calibration Guide 85662-90085

Need this instrument repaired or calibrated?

Analyzer Repair services spectrum analyzers, network analyzers, signal generators and other RF/microwave test equipment.

Free estimates - visit our website or email us to get started.

www.analyzerrepair.com **manager@analyzerrepair.com**

This manual is provided free as a reference by Analyzer Repair, Inc. All original content remains the property of its original manufacturer. Not for resale.

If you are the rights holder and object to this document being hosted here, email manager@analyzerrepair.com and it will be removed promptly.

Troubleshooting and Repair Manual

HP 85662A Spectrum Analyzer IF-Display Section

Analyzer Repair Inc.

HEWLETT PACKARD

HP Part No. 85662-90085 Microfiche Part No. 85662-90086
Printed in USA December 1990

@Copyright Hewlett-Packard Company 1990
All Rights Reserved. Reproduction, adaptation, or translation without prior written permission is prohibited, except as allowed under the copyright laws.
1212 Valley House Drive, Rohnert Park, CA 94928-4999, USA

Certification

Hewlett-Packard Company certifies that this product met its published specifications at the time of shipment from the factory. Hewlett-Packard further certifies that its calibration measurements are traceable to the United States National Institute of Standards and Technology, to the extent allowed by the Institute's calibration facility, and to the calibration facilities of other International Standards Organization members.

Warranty

This Hewlett-Packard instrument product is warranted against defects in material and workmanship for a period of one year from date of shipment. During the warranty period, Hewlett-Packard Company will, at its option, either repair or replace products which prove to be defective.

For warranty service or repair, this product must be returned to a service facility designated by HP. Buyer shall prepay shipping charges to HP and HP shall pay shipping charges to return the product to Buyer. However, Buyer shall pay all shipping charges, duties, and taxes for products returned to HP from another country.

HP warrants that its software and firmware designated by HP for use with an instrument will execute its programming instructions when properly installed on that instrument. HP does not warrant that the operation of the instrument, or software, or firmware will be uninterrupted or error-free.

Analyzer Repair Inc.

Limitation of Warranty

The foregoing warranty shall not apply to defects resulting from improper or inadequate maintenance by Buyer, Buyer-supplied software or interfacing, unauthorized modification or misuse, operation outside of the environmental specifications for the product, or improper site preparation or maintenance.

NO OTHER WARRANTY IS EXPRESSED OR IMPLIED. HP SPECIFICALLY DISCLAIMS THE IMPLIED WARRANTIES OF MERCHANTABILITY AND FITNESS FOR A PARTICULAR PURPOSE.

Exclusive Remedies

THE REMEDIES PROVIDED HEREIN ARE BUYER'S SOLE AND EXCLUSIVE REMEDIES. HP SHALL NOT BE LIABLE FOR ANY DIRECT, INDIRECT, SPECIAL, INCIDENTAL, OR CONSEQUENTIAL DAMAGES, WHETHER BASED ON CONTRACT, TORT, OR ANY OTHER LEGAL THEORY.

Assistance

Product maintenance agreements and other customer assistance agreements are available for Hewlett-Packard products.

For any assistance, contact your nearest Hewlett-Packard Sales and Service *Office.*

Safety Symbols

The following safety symbols are used throughout this manual. Familiarize yourself with each of the symbols and its meaning before operating this instrument.

Caution



The ***caution*** sign denotes a hazard. It calls attention to a procedure which, if not correctly performed or adhered to, could result in damage to or destruction of the instrument. Do not proceed beyond a ***caution*** sign until the indicated conditions are fully understood and met.

Warning



The *warning* sign denotes a hazard. It calls attention to a procedure which, if not correctly performed or adhered to, could result in injury or loss of life. Do not proceed beyond a *warning* sign until the indicated conditions are fully understood and met.

General Safety Considerations

Warning



***Before this instrument is switched on,* make sure it has been properly grounded through the protective conductor of the ac power cable to a socket outlet provided with protective earth contact.**

Any interruption of the protective (grounding) conductor, inside or outside the instrument, or disconnection of the protective earth terminal can result in personal injury.

Warning

There are many points in the instrument which can, if contacted, cause personal injury. Be extremely careful.

Any adjustments or service procedures that require operation of the instrument with protective covers removed should be performed only by trained service personnel.

Caution



***Before this instrument is switched on,* make sure its primary power circuitry has been adapted to the voltage of the ac power source.**

Failure to set the ac power input to the correct voltage could cause damage to the instrument when the ac power cable is plugged in.

Analyzer Repair Inc.

Contents

IF-Display Section General Information	General information on the contents of the manual, including storage, shipment, and packaging.
IF Overall Block Diagram	Mnemonic Table, Instrument Bus Pin Connection Table, and Overall IF Block Diagram.
Al Display Section	Al Display Section Troubleshooting information, Block Diagram, and A1A1 through A1A10 service sheets.
A3 Digital Storage Troubleshooting	A3 Digital Storage Troubleshooting information, Block Diagram, and A3A1 through A3A10 service sheets.
A4 IF Section Troubleshooting	A4 Section Block Diagram, and A4A1 through A4A10 service sheets.
Options	Information and service sheets that explain the difference between an IF-Display Section with an option and a standard IF-Display Section.
General Parts Listing	Replaceable parts information and parts identification figures.
Major Assembly and Component Locations	Major assembly and component locations.

Analyzer Repair Inc.

IF-Display Section General Information

IF-Display Section Service

Introduction

This Troubleshooting and Repair Manual contains information for the troubleshooting and repair of the IF-Display Section of the instrument. This information is combined in service sheets and indexed with tabs for quick reference.

Instruments Covered by This Manual

- HP 85662A IF-Display Sections, serial number prefixes 2403A and above.
- Option 067 (1 kHz to 3 MHz Resolution Bandwidths for the HP 8567A Spectrum Analyzer),
- Option 400 (400 Hz operation)
- Option 462 (Impulse Bandwidths)
- Option H96 (30 Hz-l MHz Resolution Bandwidths)

HP 85662A IF-Display Sections with serial number prefixes below 24038 are covered in both Volume 3 of the HP 8566A Operating and Service Manual (HP part number 08566-90006) and Volume 3 of the HP 85688 Operating and Service Manual (HP part number 08568-90012).

How the HP 85662A Is Used

- HP 85662A IF-Display Section is used with:
  - HP 85660B RF Section as the HP 8566B Spectrum Analyzer
  - HP 85680B RF Section as the HP 8568B Spectrum Analyzer.
- Option 462 is used with:
  - HP 85660B RF Section as the HP 8566B Option 462 Spectrum Analyzer
  - HP 85680B RF Section as the HP 8568B Option 462 Spectrum Analyzer
- Option 067 is used with:
  - HP 856708 RF Section as the HP 85678 Spectrum Analyzer
- Option H96 is used with:

•I HP 85680B Option H96 as the HP 8568B Option E96 Spectrum Analyzer
o HP 85680B Option H44 as the HP 8568B Option E44 Spectrum Analyzer.

Analyzer Repair Inc.

Service Sheets

The service sheets in this manual are organized in alpha-numeric order and are indexed with tabs to make it easy to locate a specific service sheet. Each of the service sheets contain the following information:

- Circuit Description (where practical)
- Troubleshooting Hints (where practical)
- Replaceable Parts Lists
- Block Diagram (where practical)
- Component Location Illustrations
- Schematic Diagrams

Repair Procedures

Repair procedures are included for use in removing and replacing assemblies for repair. They are located in the following sections:

- Front-Panel LED Replacement

  Tab: A1A1 Keyboard

- Front Panel Removal and Repair

  Tab: A1A1 Keyboard

- CRT Replacement

  Tab: A1A3 High Voltage Regulator

- IF-Display Section Internal Fuse Replacement

  Tab: A1A6 ±15 V Regulator and High Voltage

Major Assembly and Component Locations

Major assembly and component location illustrations for the IF-Section are located at the rear of this manual.

Troubleshooting

Troubleshooting information for the IF-Section is divided into two levels as follows:

- Section Level

  IF Overall Block Diagrarn
  Al Display Section Block Diagram
  A3 Digital Storage Troubleshooting
  A4 IF-Section Troubleshooting

- Assembly Level

  Most assemblies have troubleshooting hints immediately following their circuit descriptions. Troubleshooting information is also located on assembly-level block diagrams, notes, and schematics.

Analyzer Repair Inc.

All assemblies are indexed by tab except for the ones listed in Table 1 at the end of this section. Table 1 lists the index tabs where these assemblies can be found.

Assembly Locations

Assembly	Tab Location
A1T1	A1A8 Rectifier, Block Diagram General Parts Listing, Table 6
A1V1	A1A3 High Voltage Regulator, Block Diagram General Parts Listing, Table 6
A1A11	A1A3 High Voltage Regulator, Block Diagram General Parts Listing, Table 4
A2	Not Assigned

Storage and Shipment

Environment

The instrument may be stored or shipped in environments within the following limits:

Temperature ..... −40°C to +75°C
Humidity ..... 5% to 90% at 0° to 40°C
Altitude ..... Up to 15,240 meters (50,000 feet)

The instrument should be protected from temperature extremes which might cause condensation within the instrument.

Original Packaging

It is recommended that the original factory packaging materials be retained for use when shipping the instrument. If original packaging material cannot be retained, packaging materials identical to those used in factory packaging are available through Hewlett-Packard offices. Part numbers and descriptions of the packaging materials are listed in Figure 1.

The combined weight of the two instrument sections is approximately 50 kg (112 lbs). Because of the weight involved, do not package the instrument sections fastened together as one unit. The instrument sections must be separated and packaged in separate containers. The quantity of packaging materials in Figure 1 is for only one instrument section.

If the instrument is being returned to Hewlett-Packard for servicing, attach a tag to each carton indicating the type of service required, return address, model number, and full serial number. For your convenience, a supply of tags is included at the end of this section. Also, mark each container FRAGILE to assure careful handling. In any correspondence, refer to the instrument by model number and full serial number.

Other Packaging

If it is necessary to use packaging materials other than the type used in original factory packaging, the following general instructions should be followed.

Analyzer Repair Inc.

1. Separate the two instrument sections and wrap each in heavy paper or plastic.
2. Place the instrument sections in separate containers with 8 to 10 cm (3 to 4 inches) of shock-absorbing material around all sides to provide firm cushioning and prevent movement inside the container. Protect front panels with cardboard. Double-wall corrugated cartons of 125 kg (275 lb) bursting strength are sufficient for shipping containers.
3. Seal each container securely and, if shipping to a Hewlett-Packard office or service center, attach a tag to each container indicating the type of service required, return address, model number, and full serial number. For your convenience, a supply of tags is included at the end of this section.
4. Mark each container FRAGILE to assure careful handling.

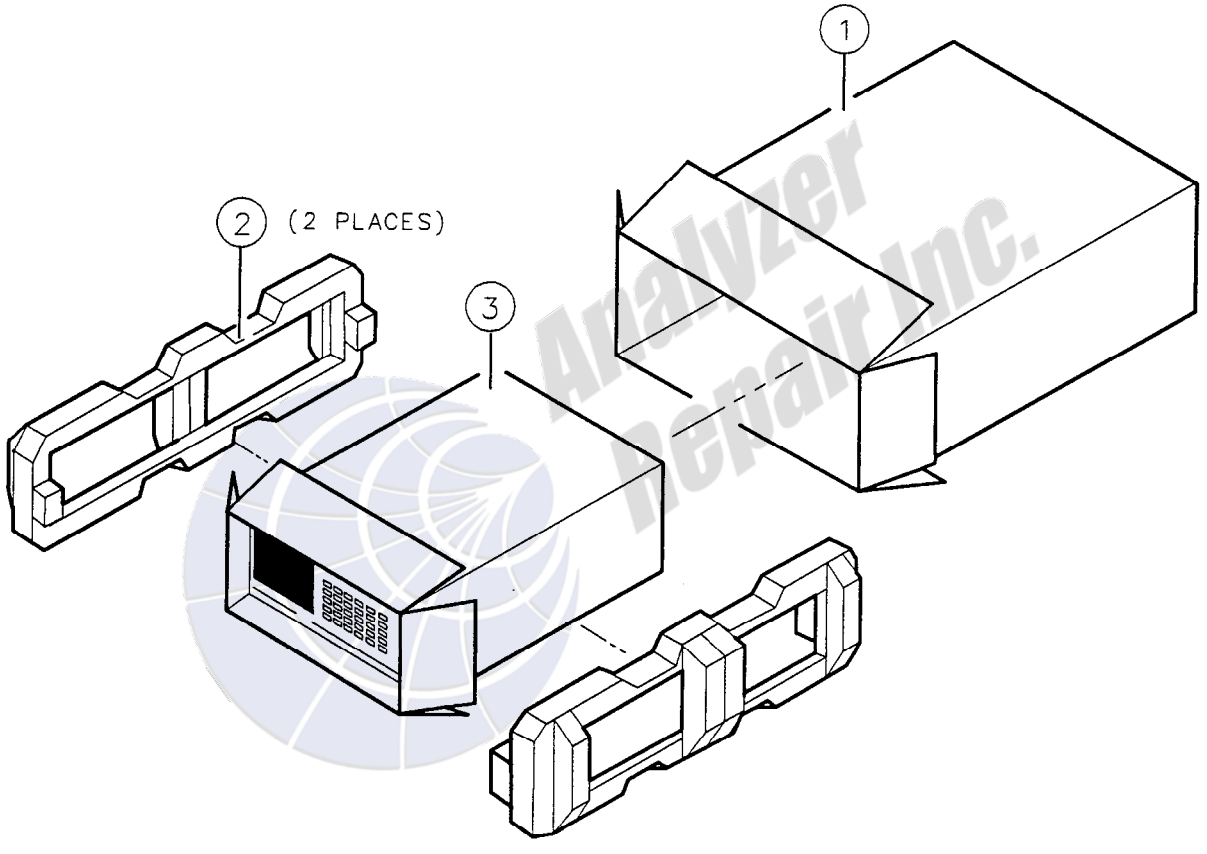

ITEM	QTY	HP PART NO.	DESCRIPTION
1	1	9211-4487	OUTER BOX
2	2	5180-2319	INNER FOAM PAD
3	1	5180-2320	INNER BOX

Figure 1. Packaging for Shipment Using Factory Packaging Materials

4 IF-Display Section General Information

IF Overall Block Diagram

Table 1. A3 Digital Storage Mnemonic Table

Mnemonic	Description	Mnemonic	Description
18.4MHZ LO	18.4 MHz Local Oscillator Signal	LDRMP	Load Ramp Register
[MHZ	1 MHz ADC Clock	LDSR	LOW = Digital Storage Ready
21.4MHZ	21.4 MHz IF Signal	LDX	Load X Position Register
3 MHZ	3 MHz IF Signal	LDY	Load Y Position Register
A LOG	Log Expand Control	LFSEN	LOW = Fast Sweep Enable
A0 - A11	Accumulator Bus Bits 0 through 11	LG 10	Linear Gain Controls
A10dB	Attenuation Controls	LG20	
A20dB		LGCLK	200 kHz Line Generator Clock
A2dB		LGX	Line Generator Horizontal Signal
A4dB		LGY	Line Generator Vertical Signal
A8dB		LINCRSA	Increment Stroke Address
ADR0	Instrument Bus Address Bits 0 through 3	LINTG	LOW = Integrator Control
ADR3		LL	Long Line
AUX BLANK	Auxiliary Blanking Output	LLGBLANK	LOW = Line Generator Blanking Control
AUX Z	Auxiliary Z Axis Output	LLL	LOW = Long Line
AVdB	Attenuation Control	LMEMEN	LOW = Enable Memory Output
B LOG	Log Expand Control	Log/Linear Control	
B0 - B11	Digital Storage Bus Data Bits 0 through 11	LQ	LOW = Selected Qualifier
BL0 - BL6	Branch Length Bus Bits 0 through 6	LROMEN	LOW = ROM Enable
BLINK	Blink CRT Display Control	LRSTO	LOW = Reset Trigger Occurred
BRIGHT	Bright CRT Display Control	LRTN	LOW = Enable Interrupt Return
BS	Block Switch Control	LRTRC	LOW = Retrace Signal
BWS	Bandwidth Controls	LT10	LOW= IF-Display Section 1/0 Strobe
BW63		LTON	LOW = Turn On
BW68		LTSTA	LOW = Input Test A Data
BW7		LTSTB	LOW = Input Test B Data
CE	Memory Chip Enable	LWRITE	Memory Write Control
CHAR	Character Mode Display Control	LZERO	Output of Zero Check on ALU Result
CLK	8 MHz System Clock	MA0-MA11	Memory Address Bus Bits 0 through 11

Analyzer Repair Inc.

Table 1. A3 Digital Storage Mnemonic Table (continued)

Mnemonic	Description	Mnemonic	Description
CRT DSBL	CRT Disable Control	NS0 - NS7	Next State Bus Bits 0 through 7
ΔX	Delta X Position	OS10	Offset Gain Controls
ΔY	Delta Y Position	OS20-1	
DIM	Dim CRT Display Control	OS20-2	
DOTEN	Dot Enable	PENLIFT	Recorder PENLIFT Control
F0 - F11	Function Bus Bits 0 through 11	POS	Sign of ALU Results
FC0 - FC3	Data Manipulator Function Control Bits 0 thru 3		
PS0 - PS3	1/0 Port Selection Bits 0 through 3		
FREQ ZERO	Frequency Zero Control	QS0 - QS3	Qualifier Selection Bits 0 through 3
FS	Fast Sweep Mode	R0 - R 11	Ram Bus Bits 0 through 11
FSOUT	Fast Sweep Output	RBWA	Resolution Bandwidth Controls
FSZ	Fast Sweep Z Axis	RBWB	
HLDX	Hold X Position (Sample and Hold Control	RBWC	
HLDY	Hold Y Position (Sample and Hold Control	RBWD	
HOLD	Track and Hold Control	REC CAL	Recorder Calibrate
HSWP	HIGH = Sweeping	REC ZERO	Recorder Zero
ICLK	ndicator Clock (Front-Panel LEDs)	RM0 - RM2	Ram Register Select Bits 0 through 2
INSELA	Input Selection Bit A	RSEN	Reset Peak Detectors Enable
INSELB	Input Selection Bit B	RSHS	Reset High Sweep
INTG	Integrator Control	S0 - S11	Source Bus Bits 0 through 11
INTR	Interrupt	S0 - S7	State Bus Bits 0 through 7
IOB0	Instrument Bus Data Bits 0 through 15	SG10	Step Gain Controls
IOB15		SG20-1	
IOC	1/0 Port Input/Output Control	SG20-2	
KS0 - KS3	Constant Selection Bits 0 through 3	SMPL	Sample
L0 - L7	Link State Bus Bits 0 through 7	STROK8	Stroke 8 of Current Character
LADC	LOW = Enable ADC Output	SWITCH	Up/Down Converter Control
LBLANK	LOW= Blanking Control	VBWA	Video Bandwidth Controls
LCLK	nverted CLK	VBWB	
LCLRSA	LOW = Clear Stroke Address	VBWC	
LDCHAR	Load Character Register	VBWD	
LDEXP	Load Expand Register	VIDEO	Video Signal
LDM EN	Data Manipulator Output Enable	X	Horizontal Signal to CRT
LDMAR	Load Memory Address Register	Y	Vertical Signal to CRT
LDMDR	Load Memory Data Register	Z	ntensity Signal to CRT

Analyzer Repair Inc.

2 IF Overall Block Diagram

Table 2. 50-Wire Instrument Bus Pin Connection Table for IF-Display Section

Pin	Signal	Description	Pin	Signal	Description
1	GND	Ground	26	ADR3	Instrument Bus Address Bits 0 - 4
2	NC	No Connection	27	ADR4	Instrument Bus Address Bits 0 - 4
3	IOBO	Instrument Bus Data Bits 0 - 15	28	ADRS	Address Bit 5 not used
4	IOB I	Instrument Bus Data Bits 0 - 15	29	NC	No Connection
5	IOB2	Instrument Bus Data Bits 0 - 15	30	NC	No Connection
6	IOB3	Instrument Bus Data Bits 0 - 15	31	KR8	Key Rows 8 - 11
7	IOB4	Instrument Bus Data Bits 0 - 15	32	KR9	Key Rows 8 - 11
8	IOB5	Instrument Bus Data Bits 0 - 15	33	KR10	Key Rows 8 - 11
9	IOB6	Instrument Bus Data Bits 0 - 15	34	KR 11	Key Rows 8 - 11
10	IOB7	Instrument Bus Data Bits 0 - 15	35	KC0	Key Columns 0 - 7
11	IOB8	Instrument Bus Data Bits 0 - 15	36	KCI	Key Columns 0 - 7
12	IOB9	Instrument Bus Data Bits 0 - 15	37	KC2	Key Columns 0 - 7
13	IOB10	Instrument Bus Data Bits 0 - 15	39	KC4	Key Columns 0 - 7
14	IOB11	Instrument Bus Data Bits 0 - 15	40	KCS	Key Columns 0 - 7
15	IOB12	Instrument Bus Data Bits 0 - 15	41	KC6	Key Columns 0 - 7
16	IOB13	Instrument Bus Data Bits 0 - 15	42	KC7	Key Columns 0 - 7
17	IOB14	Instrument Bus Data Bits 0 - 15	43	LSTP	LOW = Stop Processor
18	IOB15	Instrument Bus Data Bits 0 - 15	44	HSWP	HIGH = Sweeping
19	NC	No Connection	45	LSRQ	LOW = Service Request
20	NC	No Connection	46	LDSR	LOW = Digital Storage Ready
21	NC	No Connection	47	LB10	LOW = RF Section I/O Strobe
22	HPON	HIGH = IF-Display Section Power ON	48	GND	Ground
23	ADRO	Instrument Bus Address Bits 0 - 4	49	LT10	LOW = IF-Display Section I/O Strobe
24	ADR1	Instrument Bus Address Bits 0 - 4	50	GND	Ground
25	ADR2	Instrument Bus Address Bits 0 - 4			

Analyzer Repair Inc.

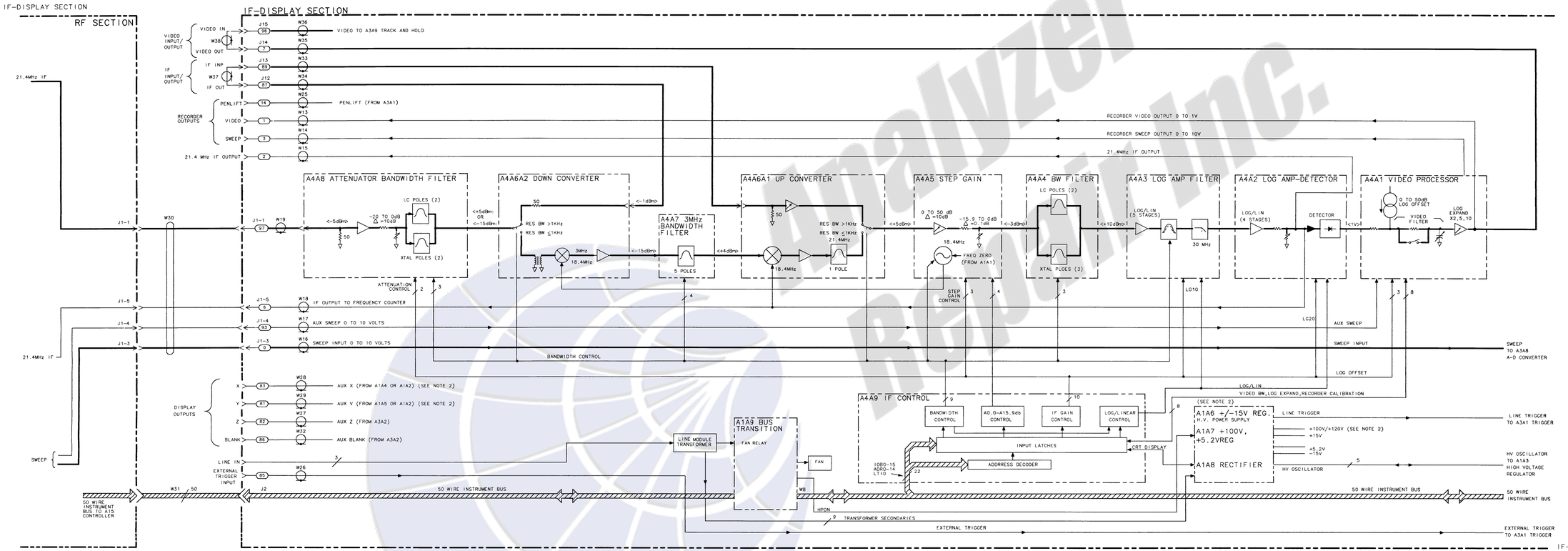

NOTES:

1. UNLESS OTHERWISE INDICATED, POWER LEVELS ARE MEASURED UNDER THE FOLLOWING CONDITIONS USING AN ACTIVE PROBE AND THE SPECTRUM ANALYZER.

INSTRUMENT PRESET	
CENTER FREQUENCY	CAL OUT FREQ.
FREQUENCY SPAN	0 Hz
ATTENUATION	0 dB
RESOLUTION BANDWIDTH	3KHz

2. IF-DISPLAY SECTIONS WITH SERIAL NUMBER PREFIXES 3004A AND ABOVE HAVE THE FOLLOWING CHANGES.

—THE A1A2 Z-AXIS APLIFIER, THE A1A4 X DEFLECTION AMPLIFIER, AND THE A1A5 Y DEFLECTION AMPLIFIER WERE INCORPORATED INTO THE A1A2 XYZ DRIVER AMPLIFIER.

—THE A1A6 +/-15V REGULATOR WAS CHANGED AND HAS BEEN RENAMED THE A1A6 HIGH VOLTAGE POWER SUPPLY.

—THE A1A7 +100V, +5.2V REGULATOR +100V OUTPUT HAS BEEN CHANGED TO THE +120V.

—THE A1A11 HIGH VOLTAGE MULTIPLIER HAS BEEN INCORPORATED ONTO THE A1A3A1 HIGH VOLTAGE MODULE.

IF-DISPLAY OVERALL, BLOCK DIAGRAM (1 OF 2)

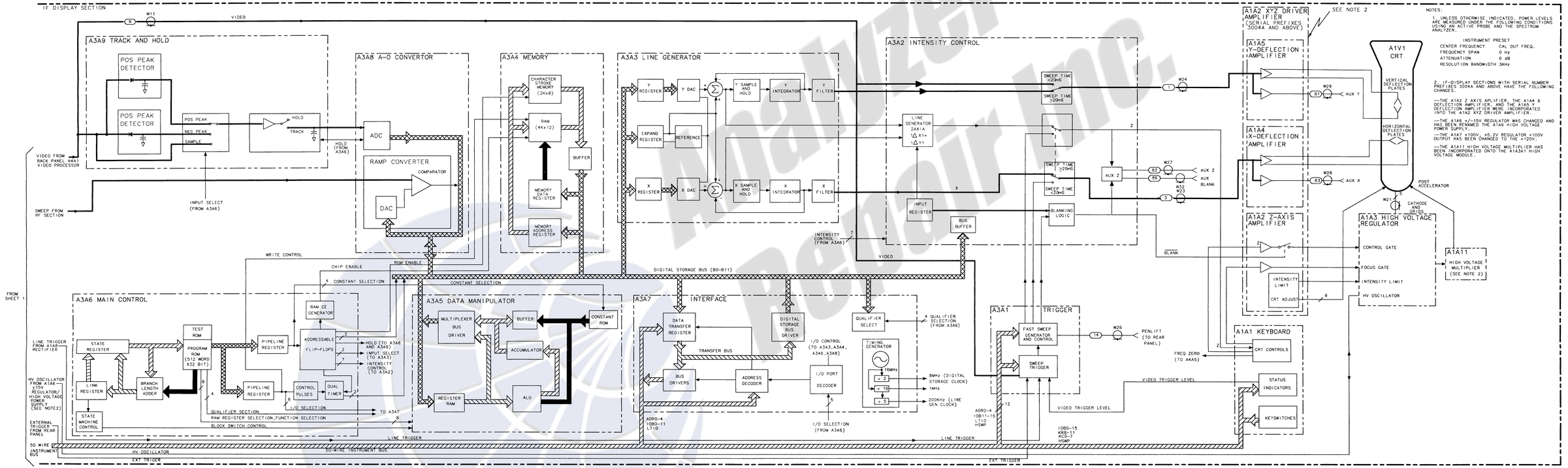

IF-DISPLAY OVERALL BLOCK DIAGRAM (2 OF 2)

A1

Display Troubleshooting

The Display system consists of four sections:

Input Section	A3A8 Analog-Digital Converter and A3A9 Track and Hold
Processor Section	A3A4 Memory, A3A5 Data Manipulator, A3A6 Main Control, and A3A7 Interface
CRT Driver Section	A3A1 Trigger, A3A2 Intensity Control, and A3A3 Line Generator.
CRT Amplifier Section	A1A3 High Voltage Regulator and either A1A2 XYZ Driver Amplifier (Serial Prefixes 3004A and above) or A1A2 Z Axis Amplifier A1A4 X Deflection Amplifier and A1A5 Y Deflection Amplifier

Isolation of a malfunction to one of the above sections is done with the use of rear-panel display outputs and the internal test programs.

If the left INSTR CHECK LED is on, a failure has probably occurred in Digital Storage. Refer to the A3 Digital Storage Troubleshooting notes for the correct troubleshooting procedure.

The following paragraphs briefly describe the failure modes and appropriate places to begin the troubleshooting.

Characters Only

If only the characters on the CRT display are affected, the problem most likely exists on the A3A4 Memory.

Graticule and Characters Only

If the graticule and characters are incorrect, but the video information appears to be correct, suspect the System ROMs on A3A6 first. Also the "long POP" test of the RF Section memory should be performed. Refer to the Digital Storage Troubleshooting notes for more information.

Analyzer Repair Inc

Video (Signal) Only

If only the video information is incorrect, suspect A4 IF Section, A3A8, or A3A9. To eliminate the IF, connect the rear-panel SWEEP and VIDEO RECORDER OUTPUTS to an oscilloscope. If the video is correct, then either A3A8 or A3A9 is defective.

Remove cable 96 from A3A9J1. Then jumper A3A8TP1 to A3A9TP3 and push Instrument Preset. This substitutes the sweep ramp for the video input. The CRT display is similar to Figure 7 in the A3A8 tab. If the ramp is incorrect, remove A3A9, jumper A3A8TP1 to A3A8TP6 and push Instrument Preset. The CRT display is the same as Figure 7 in the A3A8 tab. If the display is correct, the problem is in the A3A9 assembly. Refer to A3A9 Troubleshooting procedure. If ramp is incorrect, suspect ADC on A3A8. See the A3A8 Troubleshooting notes to verify this.

Don't rule out the sweep system, especially the ramp converter on A3A8, when troubleshooting video failures. Some ramp converter failures produce CRT displays that are similar to those caused by ADC failures.

All CRT Information Blank or Distorted

Check X, Y, and Z DISPLAY OUTPUTS on rear panel. If these are correct, the fault is most likely with the X/Y Deflection Amplifiers or Z Axis Amplifier (or A1A2 XYZ Deflection Amplifier). The following program, which places a dot at the center of the display, is helpful when troubleshooting the Deflection Amplifiers. It balances the voltages in both halves of the circuitry. Press Instrument Preset and key in the following:

Blank Trace A, SHIFT, Recorder Lower Left, 0 Hz . . . . . .DSPL ADRS
SHIFT, Recorder Upper Right . . . . . .WRITE
1090 Hz . . . . . Vector Command
512 Hz . . . .X coordinatesforcenter screen
512 Hz . . . . . Y coordinates for center screen
1092 Hz . . . . . End of display

If the X, Y, and Z DISPLAY OUTPUTS produce either distorted or no output, Digital Storage must be tested. Connect a jumper from A3A6TP3 to A3A6TP6 and push A3A7S1. The Digital Storage Test Pattern (Figure 1 of the A3 Digital Storage Troubleshooting tab) results. Refer to the Digital Storage Troubleshooting procedures. If the test pattern is correct, start with the system ROMs check.

If the test pattern is incorrect, verify operation of A3A3 Line Generator and A3A2 Intensity Control. Refer to the troubleshooting information included with the schematics. If A3A3 and A3A2 are working properly, then all of Digital Storage will have to be checked, starting with A3A6.

Whenever the display is blank, and the left INSTR CHECK LED is off, check the A1A6 ±15 V Regulator (or A1A6 High Voltage Power Supply) and A1A7 +100 V, +5.2 V Regulator. The power supply LEDs indicate the presence of voltage but not regulation. Verify operation of A3A2 Intensity Control and A1A2 Z Axis Amplifier. If these are all working properly, carefully examine the A1A3 High Voltage Regulator assembly.

If the CRT is blank, check the CRT oscillator to see if it is turned off. Measure A1A6TP6 with a DVM. If TP6 is a digital high, the CRT will not operate since the oscillator is turned off. Troubleshoot A1A6 to check for bad components, shorts, and so forth. If the A1A6 is operating correctly, check the CRT disable line from A4A9U14. If the IC is damaged, it

can cause the CRT to be disabled. If U14 is operating correctly, visually inspect the A4A9 assembly.

Analyzer Repair Inc.

A3A3 LINE GENERATOR

A3A2 INTENSITY CONTROL

A1A4 X DEFLECTION AMPLIFIER

A1A5 Y DEFLECTION AMPLIFIER

A1A2 XYZ DRIVER APMLIFIER (SEE NOTE 1)

A1V1 CRT

A1A3 HIGH VOLTAGE REGULATOR

A1A2 Z AXIS AMPLIFIER

A3A1 TRIGGER

A1A9 BUS TRANSITION

A1A1 KEYBOARD

A1A6 +/-15V REGULATOR/ HIGH VOLTAGE POWER SUPPLY (SEE NOTE 2)

A1A11 HIGH VOLTAGE AMPLIFIER

NOTES:

1. A1A2 XYZ DRIVER AMPLIFIER INCORPORATED A1A2 Z-AXIS AMPLIFIER; A1A4 X-DEFLECTION AMPLIFIER; AND A1A5 Y-DEFLECTION AMPLIFIER ASSEMBLIES ON SERIAL NUMBER PREFIXES 3004A AND ABOVE.

2. FOR SERIAL NUMBER PREFIXES 3004A AND ABOVE, A1A3 AND A1A6 ASSEMBLY INFORMATION IS NOT CURRENT. REFER TO A1A3 TAB AND A1A6/A1A7 TAB FOR CURRENT BLOCK DIAGRAMS.

A1 DISPLAY SECTION, BLOCK DIAGRAM

A1A1

A1A1 Keyboard, Circuit Description

A1A1 Keyboard consists of three functional blocks: CRT Controls, Keyboard Switches, and Status Indicators.

CRT Controls (A)

The CRT Controls include the following front-panel potentiometers:

- INTENSITY control R1. Sets the level of the input to A1A2 Z Axis Amplifier.
- ALIGN screwdriver adjustment R8. Sets the CRT trace to horizontal.
- FOCUS screwdriver adjustment R2. Focuses the CRT trace.
- FREQ ZERO screwdriver adjustment R3. For resolution bandwidths of 1 kHz or less, adjusts the frequency of the 18.4 MHz oscillator (A4A5 Step Gain) to precisely align the IF passband to 21.400 MHz.

The front-panel STANDBY indicator, LED DS16, which is driven by the PWR DWN signal from A1A6 ±15 V Regulator, is activated when line power is applied while the power supply regulators are off.

Keyboard Switches (B)

The Keyboard Switches are a matrix of rows and columns connected to the RF Section keyboard by the 50-wire Instrument Bus W8. When a keyboard switch is activated, Al5 Controller recognizes the switch and performs the indicated operation.

Status Indicators (C)

The 17 Status Indicators, LEDs DS1 through DS15, DS17, and DS18, show the states of the various keyboard functions. Al5 Controller loads the latches U1 and U2 via the Instrument Bus W8. The latch address is decoded in A3A1 Trigger, which generates the ICLK strobe signal.

Front-Panel LED Replacement

1. Set instrument LINE switch to STANDBY.
2. Loosen set screws in INTENSITY control and Video Trigger LEVEL control knobs ① and ② and remove knobs. See Figure 1.

Analyzer Repair Inc.

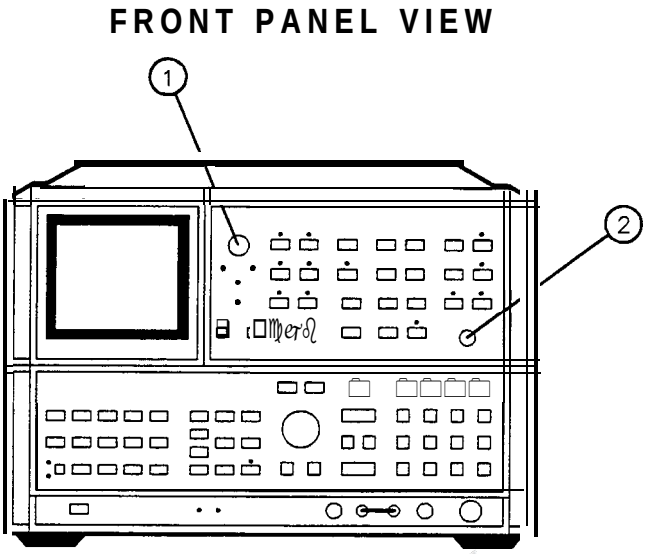

Figure 1. Front Panel Control Knobs

3. Remove nut from INTENSITY control and from Video Trigger LEVEL control using a 5/16-inch wrench.
4. The dress panel is now loose. It may be necessary to pry front panel out slightly using a sharp instrument such as a knife blade along the edge of the panel.
5. Remove the Front Panel by removing the 8 screws ④ around its edge. The LEDs are now accessible for replacement. Unsolder the leads of the LED from the rear of the printed circuit board. Pull out the LED and its standoff. Insert a new LED in the standoff and replace it on the board with the negative lead (cathode) to the square pad on the printed circuit board. Refer to Figure 2 for identification of LED leads. Solder leads to printed circuit board and trim excess lead length and reassemble the front panel.

Analyzer Repair Inc.

6. The RECORDER pushbutton LEDs ③ LOWER LEFT and UPPER RIGHT cannot be replaced as described in Step 5. To replace these LEDs, it is necessary to remove the pushbutton keys and the A1A1 Keyboard.

   a. Remove key housing the defective LED by prying the key outward using a pointed instrument such as a soldering aid.

   b. Remove sub-panel and A1A1 Keyboard by removing the screws ④ from the perimeter and pulling forward.

   C. Unsolder the defective LED from the rear of the A1A1 Keyboard.

   d. Loosen the leads from the printed circuit board using a soldering aid and push on the leads to force LED out of switch through the front of the panel.

   e. Insert new LED through the switch from the front of the panel so that leads extend through the printed circuit board at the rear of the keyboard. Negative (cathode) lead goes to square pad on printed circuit board.

   f. Pull leads of LED with fingers or needle-nose pliers to ensure that LED is far enough inside of the switch to allow the key to be reinstalled.

   g. Solder LED leads to printed circuit board, trim excess lead length, and reassemble front panel.

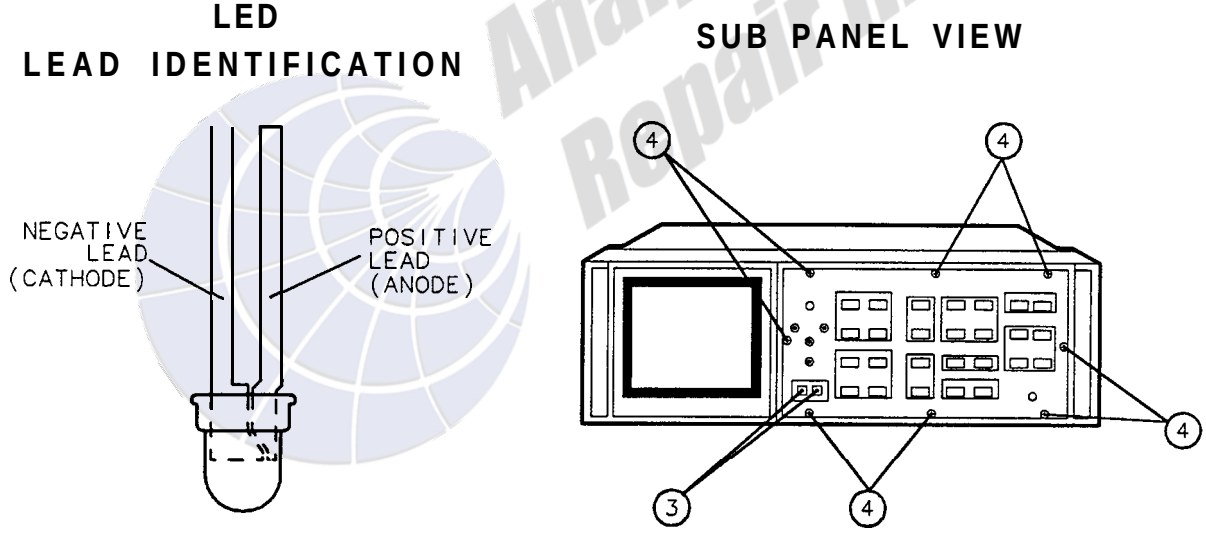

Figure 2. Front Panel LED Replacement

Analyzer Repair Inc.

Front Panel Removal and Repair

1. Remove adhesive trim strip ① from both sides of instrument.
2. Remove two screws ② located under trim strip ① as shown in View A of Figure 3.

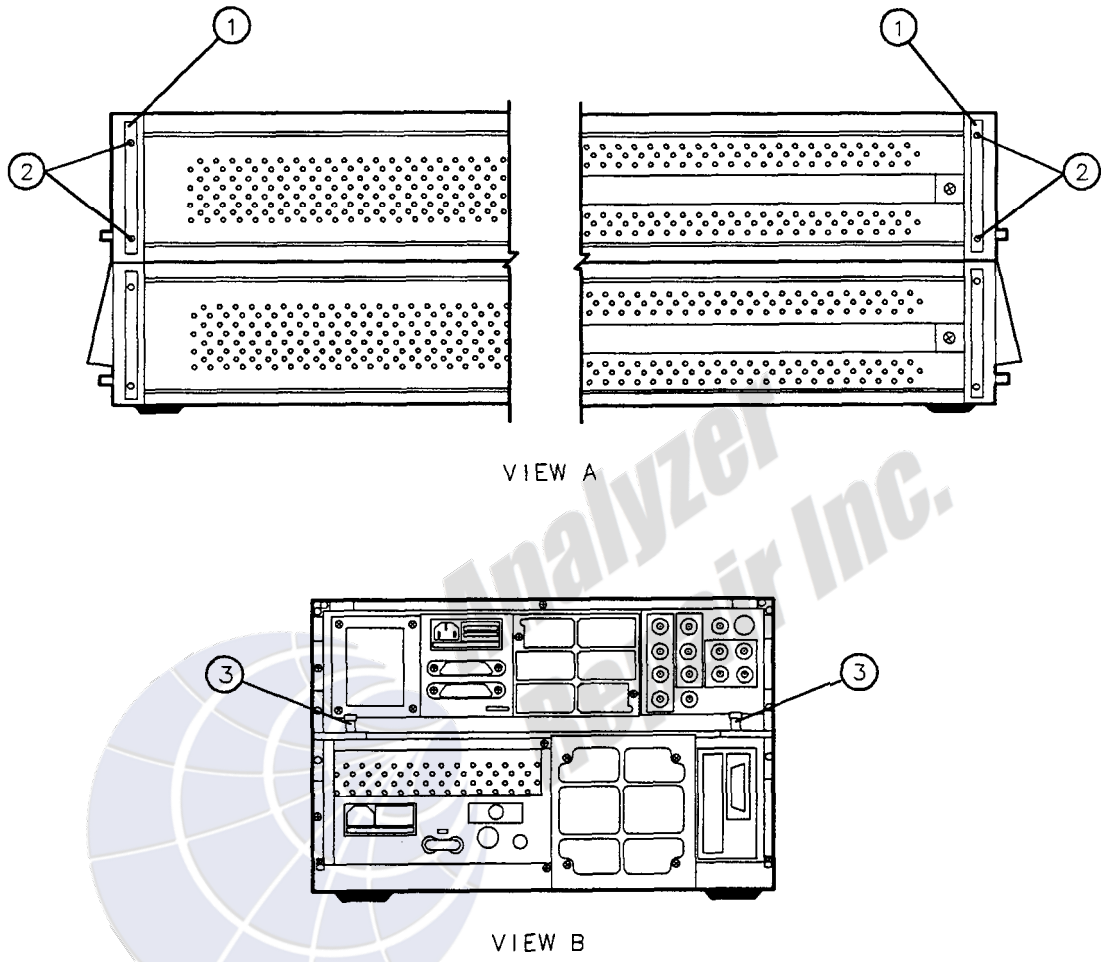

Figure 3. Front Panel Removal and Repair, Side and Rear Views

3. Loosen thumbscrews ③ shown in View B of Figure 3 used to fasten instrument sections together.
4. Separate instrument sections by holding RF Section in place while pulling forward toward front panel on IF-Display Section.

5. Remove two screws ④ (View A of Figure 4) from bottom of instrument used to secure front panel to frame.

6. Remove trim strip ⑤ shown in View B of Figure 4, by inserting blade of small flat blade screwdriver into slot ⑥ and lifting upwards.

7. Remove two screws ⑦ located under trim strip ⑤ as shown in View B of Figure 4.

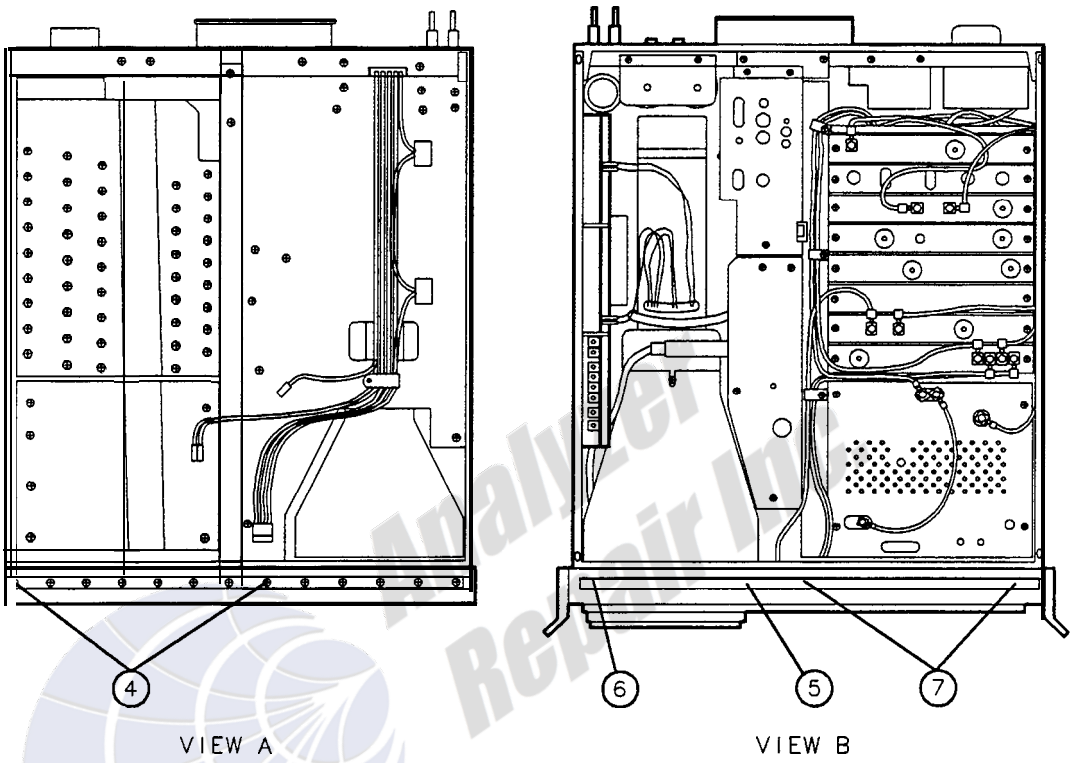

Figure 4. Front Panel Removal and Repair, Bottom and Top Views

Analyzer Repair Inc.

8. Place instrument in position shown in View A of Figure 5 and pull front panel forward to position shown.
9. Disconnect cable ⑧ from A1A10 Motherboard as shown in View A of Figure 5. Disconnect cable ⑨ at connector ⑩ and cable ⑪ at connector ⑫ on A3A10 Motherboard.
10. Front panel is now loose from instrument as shown in View B of Figure 5.
11. To remove A1A1 Keyboard, remove nine screws ⑬ used to fasten keyboard to frame.

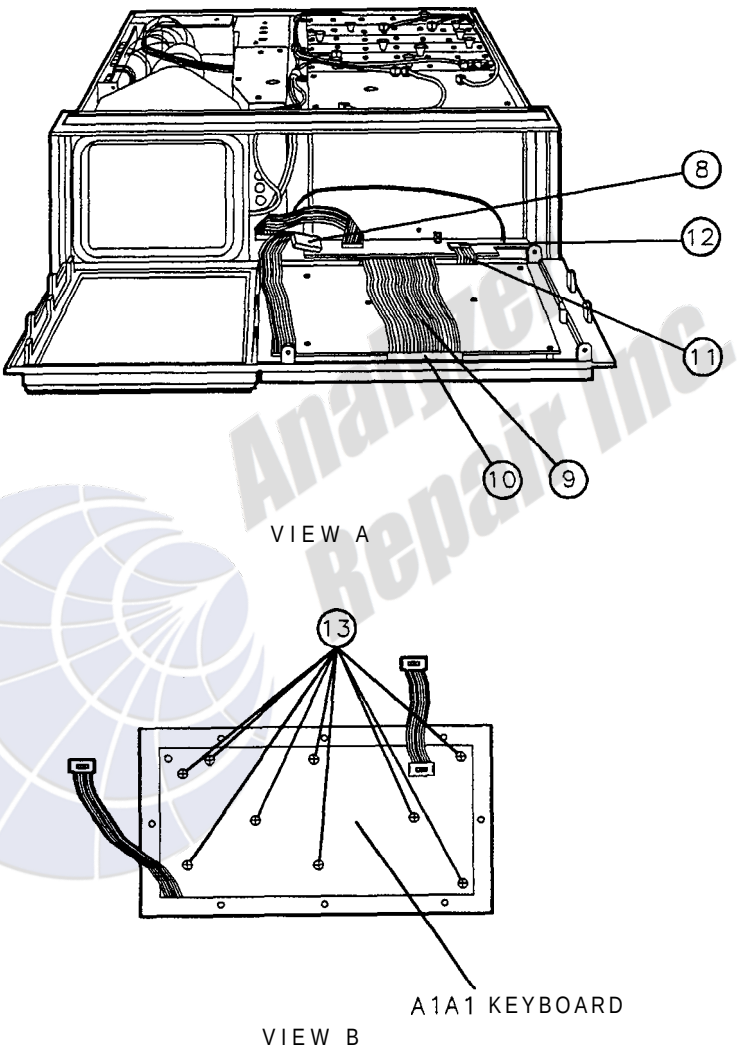

Figure 5. Front Panel Removal and Repair, Front Views

HP Part Number 85662-60001
A1A1 Keyboard

Reference Designation	HP Part Number	C D	Qty	Description	Mfr Code	Mfr Part Number
A1A1	85662-60001	1	1	KEYBOARD ASSEMBLY	28480	85662-60001
A1A1C1	0160-4084	8	1	CAP-FXD 0.1uF 50 V	56289	1C20X7R104M050B
A1A1DS1	1990-0485	5	1	LED-LAMP LUM-INT=2MCD IF=30MA-MAX BVR=5V	28480	HLMP-1503
A1A1DS2	1990-0487	7	1	LED-LAMP LUM-INT=2MCD BVR=5V	28480	HLMP-1401
A1A1DS3	1990-0487	7	1	LED-LAMP LUM-INT=2MCD BVR=5V	28480	HLMP-1401
A1A1DS4	1990-0487	7	1	LED-LAMP LUM-INT=2MCD BVR=5V	28480	HLMP-1401
A1A1DS5	1990-0487	7	1	LED-LAMP LUM-INT=2MCD BVR=5V	28480	HLMP-1401
A1A1DS6	1990-0487	7	1	LED-LAMP LUM-INT=2MCD BVR=5V	28480	HLMP-1401
A1A1DS7	1990-0487	7	1	LED-LAMP LUM-INT=2MCD BVR=5V	28480	HLMP-1401
A1A1DS8	1990-0487	7	1	LED-LAMP LUM-INT=2MCD BVR=5V	28480	HLMP-1401
A1A1DS9	1990-0487	7	1	LED-LAMP LUM-INT=2MCD BVR=5V	28480	HLMP-1401
A1A1DS10	1990-0487	7	1	LED-LAMP LUM-INT=2MCD BVR=5V	28480	HLMP-1401
A1A1DS11	1990-0487	7	1	LED-LAMP LUM-INT=2MCD BVR=5V	28480	HLMP-1401
A1A1DS12	1990-0487	7	1	LED-LAMP LUM-INT=2MCD BVR=5V	28480	HLMP-1401
A1A1DS13	1990-0487	7	1	LED-LAMP LUM-INT=2MCD BVR=5V	28480	HLMP-1401
A1A1DS14	1990-0487	7	1	LED-LAMP LUM-INT=2MCD BVR=5V	28480	HLMP-1401
A1A1DS15	1990-0487	7	1	LED-LAMP LUM-INT=2MCD BVR=5V	28480	HLMP-1401
A1A1DS16	1990-0487	7	1	LED-LAMP LUM-INT=2MCD BVR=5V	28480	HLMP-1401
A1A1DS17	1990-0487	7	1	LED-LAMP LUM-INT=2MCD BVR=5V	28480	HLMP-1401
A1A1DS18	1990-0487	7	1	LED-LAMP LUM-INT=2MCD BVR=5V	28480	HLMP-1401
A1A1J1	1251-5269	7	1	CONN-POST TYPE .100-PIN-SPCG 50-CONT	18873	68020-650
A1A1MP1	5041-3929	1	16	SPACER .450L LED	28480	5041-3929
A1A1MP3				NOT ASSIGNED		
A1A1Q1	1854-0404	0	1	TRANSISTOR NPN SI TO-18 PD=360MW	04713	
A1A1Q2	1854-0404	0	1	TRANSISTOR NPN SI TO-18 PD=360MW	04713	
A1A1R1	2100-3587	0	1	RESISTOR-VAR CONTROL CP 2K 10% 10CW	12697	388
A1A1R2	2100-2452	6	1	RESISTOR-TRMR 25K 20% CCP TOP-ADJ 1-TRN	01121	FC253M
A1A1R3	2100-2452	6	1	RESISTOR-TRMR 25K 20% CCP TOP-ADJ 1-TRN	01121	FC253M
A1A1R4	0698-3157	3	1	RESISTOR 19.6K 1% .125W TF TC=0+-100	19701	SFR25H
A1A1R5	0757-0420	3	1	RESISTOR 750 +-1% .125W TF TC=0+-100	19701	SFR25H
A1A1R6	0757-0442	9	1	RESISTOR 10K +-1% .125W TF TC=0+-100	19701	SFR25H
A1A1R7	0757-0442	9	1	RESISTOR 10K +-1% .125W TF TC=0+-100	19701	SFR25H
A1A1R8	2100-2452	6	1	RESISTOR-TRMR 25K 20% CCP TOP-ADJ 1-TRN	01121	FC253M
A1A1R9	0698-3444	1	1	RESISTOR 316 1% .125W TF TC=0+-100	19701	SFR25H
A1A1R10	0698-3161	9	1	RESISTOR 38.3K 1% .125W TF TC=0+-100	19701	SFR25H
A1A1R11	0698-3161	9	1	RESISTOR 38.3K 1% .125W TF TC=0+-100	19701	SFR25H
A1A1R12	2100-3647	3	1	RESISTOR-VAR CONTROL CP 5K 10% LIN	12697	388
A1A1R13	0698-3444	1	1	RESISTOR 316 1% .125W TF TC=0+-100	19701	SFR25H
A1A1R14	0698-3444	1	1	RESISTOR 316 1% .125W TF TC=0+-100	19701	SFR25H
A1A1R15	0757-0401	0	1	RESISTOR 100 +-1% .125W TF TC=0+-100	19701	SFR25H
A1A1S1	5060-9436	7	1	SWITCH-PB SPST-NO MOM	71468	5560-9436
A1A1S2	5060-9436	7	1	SWITCH-PB SPST-NO MOM	71468	5560-9436
A1A1S3	5060-9436	7	1	SWITCH-PB SPST-NO MOM	71468	5560-9436
A1A1S4	5060-9436	7	1	SWITCH-PB SPST-NO MOM	71468	5560-9436
A1A1S5	5060-9436	7	1	SWITCH-PB SPST-NO MOM	71468	5560-9436
A1A1S6	5060-9436	7	1	SWITCH-PB SPST-NO MOM	71468	5560-9436
A1A1S7	5060-9436	7	1	SWITCH-PB SPST-NO MOM	71468	5560-9436

**Indicates factory-selected value*

HP Part Number 85662-60001

A1A1 Keyboard

Reference Designatior	HP Part Number	C. D	Qty	Description	Mfr Code	Mfr Part Number
A1A1S8	5060-9436	7	1	SWITCH-PB SPST-NO MOM	7146E	5560-9436
A1A1S9	5060-9436	i	1	SWITCH-P8 SPST-NO MOM	71468	5560-9436
A1A1S10	5060-9436	i	1	SWITCH-PB SPST-NO MOM	7146E	5560-9436
A1A1S11	5060-9436	7	1	SWITCH-P8 SPST-NO MOM	7146E	5560-9436
A1A1S12	5060-9436	7	1	SWITCH-PB SPST-NO MOM	7146E	5560-9436
A1A1S13	5060-9436	7	1	SWITCH-PB SPST-NO MOM	7146E	5560-9436
A1A1S14	5060-9436	7	1	SWITCH-PB SPST-NO MOM	7146E	5560-9436
A1A1S15	5060-9436	7	1	SWITCH-PB SPST-NO MOM	71466	5560-9436
A1A1S16	5060-9436	7	1	SWITCH-PB SPST-NO MOM	71468	5560-9436
A1A1S17	5060-9436	7	1	SWITCH-P8 SPST-NO MOM	71468	5560-9436
A1A1S18	5060-9436	7	1	SWITCH-PB SPST-NO MOM	71468	5560-9436
A1A1S19	5060-9436	7	1	SWITCH-PB SPST-NO MOM	71466	5560-9436
A1A1S20	5060-9436	7	1	SWITCH-PB SPST-NO MOM	71466	5560-9436
A1A1S21	5060-9436	7	1	SWITCH-PB SPST-NO MOM	71466	5560-9436
A1A1S22	5060-9436	7	1	SWITCH-PB SPST-NO MOM	71468	5560-9436
A1A1S23	5060-9436	7	1	SWITCH-PB SPST-NO MOM	71468	5560-9436
A1A1S24	5060-9436	7	1	SWITCH-PB SPST-NO MOM	71468	5560-9436
A1A1S25	5060-9436	7	1	SWITCH-PB SPST-NO MOM	71468	5560-9436
A1A1S26	5060-9436	7	1	SWITCH-PB SPST-NO MOM	71468	5560-9436
A1A1S27	5060-9436	7	1	SWITCH-PB SPST-NO MOM	71468	5560-9436
A1A1S28	5060-9436	7	1	SWITCH-PB SPST-NO MOM	71468	5560-9436
A1A1U1	.820-1730	6	1	IC FF TTL LS D-TYPE POS-EDGE-TRIG COM CL	01295	SN74LS273N
A1A1U2	.820-1730	6	1	IC FF TTL LS D-TYPE POS-EDGE-TRIG COM CL	01295	SN74LS273N
A1A1U3	.810-0203	5	1	NETWORK-RES 8-SIP 470.0 OHM X 7	11236	750-81
A1A1U4	.810-0203	5	1	NETWORK-RES 8-SIP 470.0 OHM X 7	11236	750-81
A1A1W1	15662-60068	0	1	CABLE ASSEMBLY-A3 INTERFACE	28480	85662-60068
A1A1W9	15662-60066	8	1	CABLE ASSEMBLY-KEYBOARD-A3	28480	85662-60066

Analyzer Repair Inc

**Indicates factory-selected value*

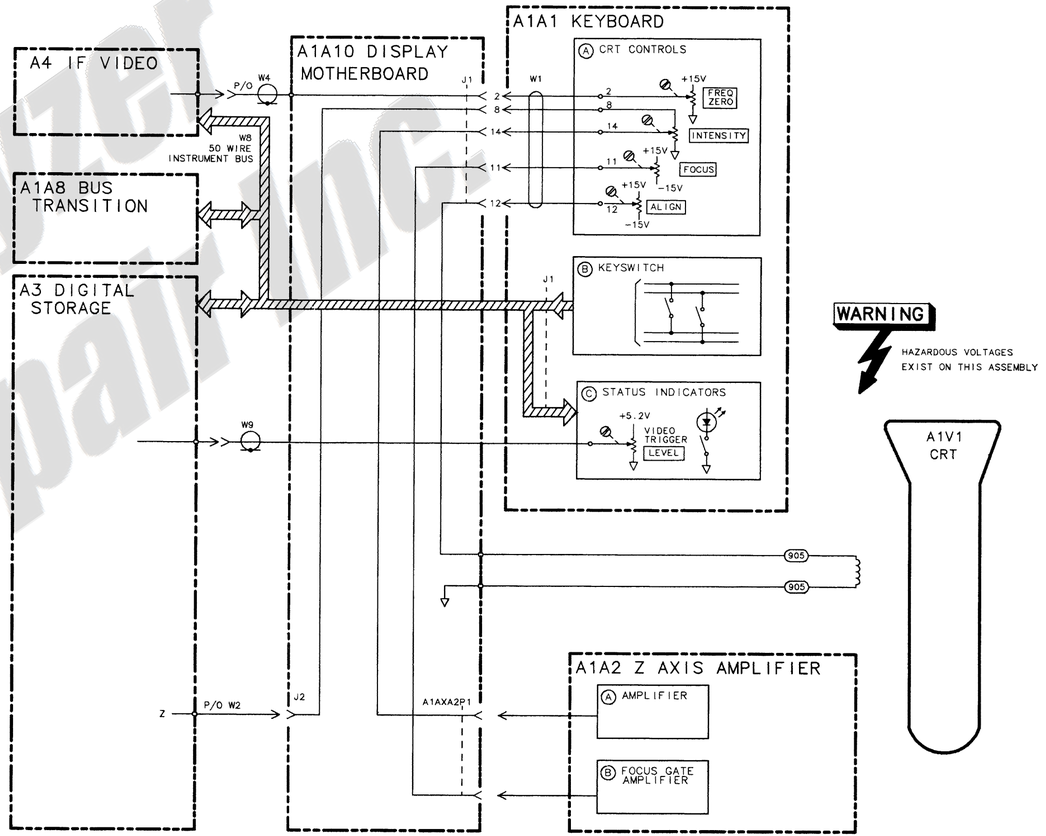

A1A1 KEYBOARD, BLOCK DIAGRAM

Analyzer Repair Inc

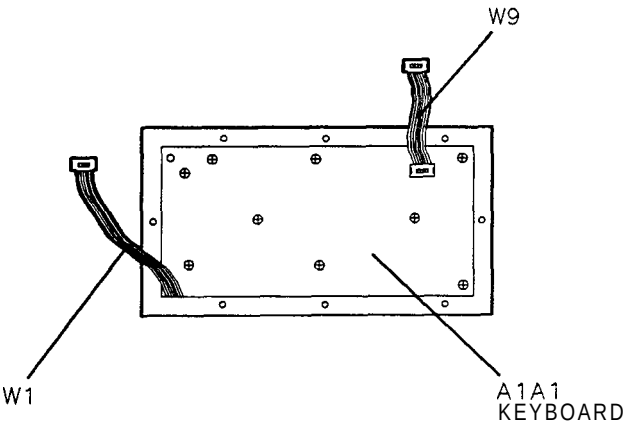

Al Front Panel Assembly and Component Locations

Analyzer Repair Inc.

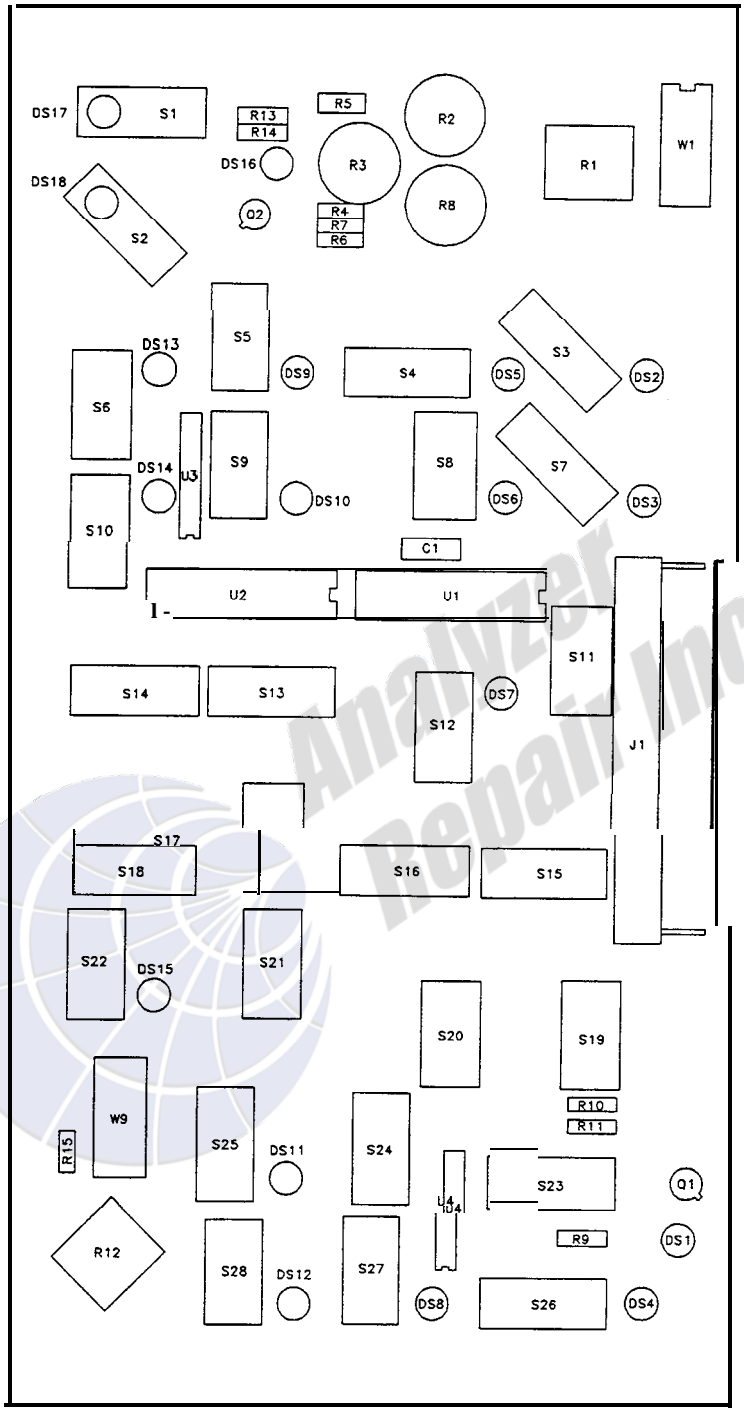

A1A1 Keyboard Component Locations, 85662-60001

A1A1 KEYBOARD
85662-60001
(SERIAL PREFIX: 2403A)

J1

PIN	SIGNAL	TO/FROM	FUNCTION BLOCK	PIN	SIGNAL	TO/FROM	FUNCTION BLOCK
1	GND		NC	26	ADR3		NC
2	NC			27	ADR4		NC
3	1OB0	A1A9J1-3	C	28	ADR5	NOT USED	NC
4	1OB1	A1A9J1-4	C	29	NC		
5	1OB2	A1A9J1-5	C	30	NC		
6	1OB3	A1A9J1-6	C	31	KR8	A1A9J1-31	B
7	1OB4	A1A9J1-7	C	32	KR9	A1A9J1-32	B
8	1OB5	A1A9J1-8	C	33	KR10	A1A9J1-33	B
9	1OB6	A1A9J1-9	C	34	KR11	A1A9J1-34	B
10	1OB7	A1A9J1-10	C	35	KC0	A1A9J1-35	B
11	1OB8	A1A9J1-11	C	36	KC1	A1A9J1-36	B
12	1OB9	A1A9J1-12	C	37	KC2	A1A9J1-37	B
13	1OB10	A1A9J1-13	C	38	KC3	A1A9J1-38	B
14	1OB11	A1A9J1-14	C	39	KC4	A1A9J1-39	B
15	1OB12	A1A9J1-15	C	40	KC5	A1A9J1-40	B
16	1OB13	A1A9J1-16	C	41	KC6	A1A9J1-41	B
17	1OB14	A1A9J1-17	C	42	KC7	A1A9J1-42	B
18	1OB15	A1A9J1-18	C	43	LSTP		NC
19	NC			44	HSWP	A3A1P1-21, A1A9J1-44	C
20	NC			45	LSRQ		NC
21	NC			46	LDSR		NC
22	HPON		NC	47	LBIO		NC
23	ADR0		NC	48	GND		NC
24	ADR1		NC	49	LTIO		NC
25	ADR2		NC	50	GND		NC

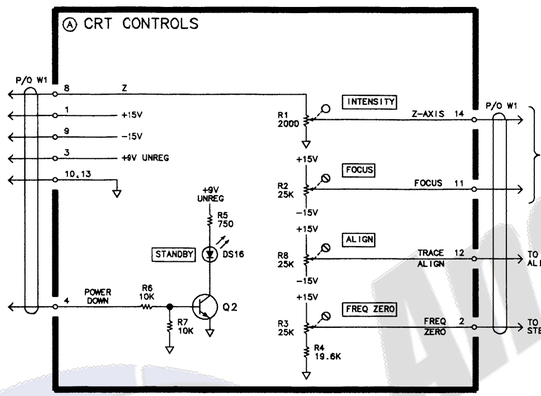

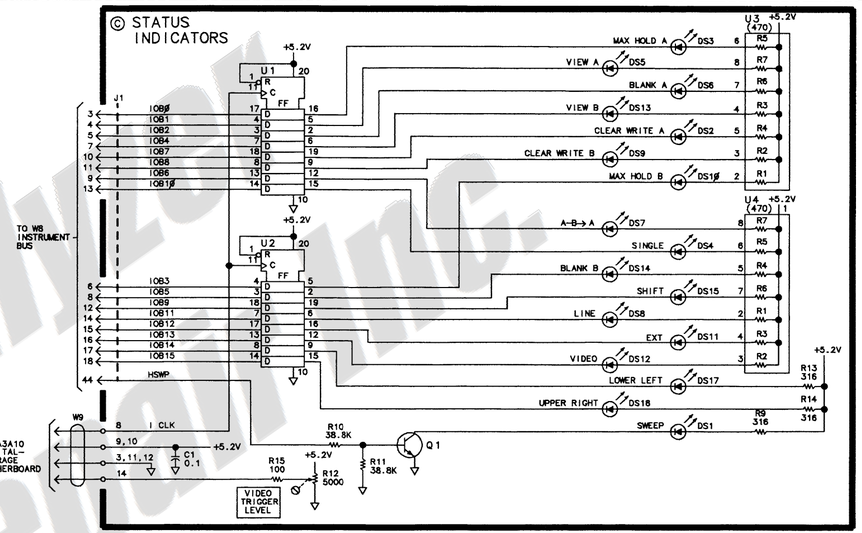

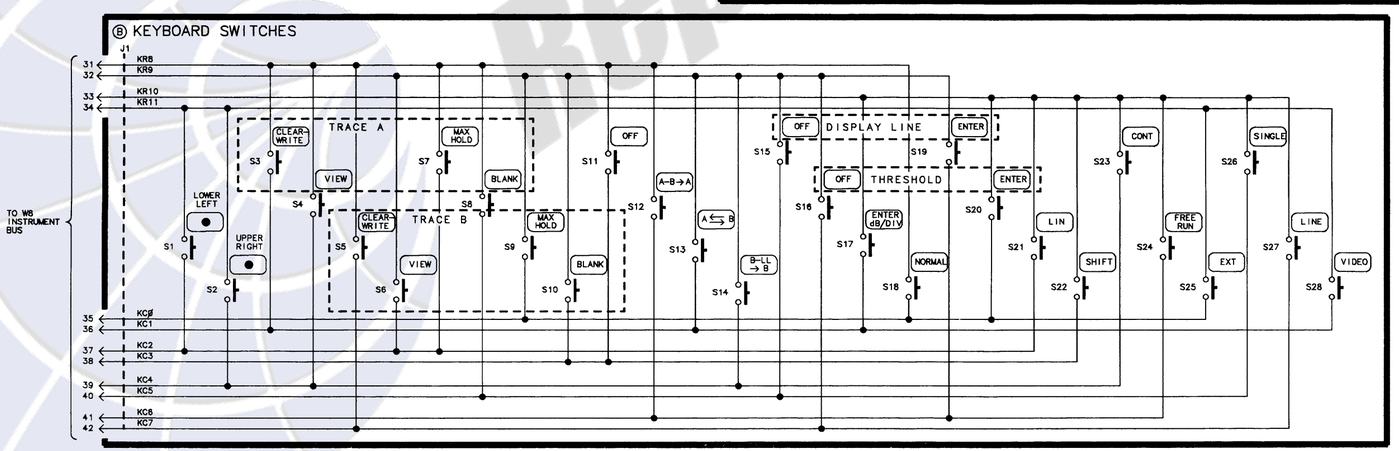

NOTES:

1. REFERENCE DESIGNATORS WITHIN THIS ASSEMBLY ARE ABBREVIATED. FOR COMPLETE REFERENCE DESIGNATION, PREFIX ABBREVIATION WITH ASSEMBLY DESIGNATION.
2. UNLESS OTHERWISE INDICATED: RESISTANCE IS IN OHMS (Ω) CAPACITANCE IS IN MICROFARADS (μF) INDUCTANCE IS IN MICROHENRIES (μH)
3. UNLESS OTHERWISE INDICATED: SIGNALS ENTER AT LEFT SIDE OR TOP AND EXIT AT RIGHT SIDE OR BOTTOM OF FUNCTION BLOCKS.
4. MNEMONIC TABLE:

MNEMONIC	DESCRIPTION
ORTHO	ORTHOGONAL
ACC	ACCELERATOR
ASTIG	ASTIGMATISM
Z	UNSCALED INTENSITY SIGNAL
LBLANK	(LOW: CRT BEAM BLANKED)
Z-AXIS	INTENSITY SIGNAL (SCALED BY A1A1R1 INTENSITY CONTROL)
ICLK	INDICATOR CLOCK (FRONT PANEL LEDS)

Analyzer Repair Inc.

A1A2

A1A2 Z Axis Amplifier / A1A2 XYZ Driver Amplifier

The A1A2 board assembly has two versions that have major differences. The change of the A1A2 assembly is the result of a change of the A1V1 Cathode Ray Tube (CRT).

The original A1A2 assembly (Instrument Serial Number Prefixes 2403A–3001A) is the Z Axis Amplifier. It is used in conjunction with the A1A4 X Deflection Amplifier and the A1A5 Y Deflection Amplifer.

The second version of the A1A2 assembly, the XYZ Driver Amplifier, replaces the original A1A2 Z Axis Amplifier. The XYZ Driver Amplifier (Serial Number Prefixes 3004A and above) incorporates the circuitry of the A1A4 X Deflection Amplifier and the A1A5 Y Deflection Amplifier, and replaces the A1A4 and the A1A5 assemblies too. The new A1A2 XYZ Driver Amplifier assembly, much larger than the original A1A2 assembly, uses the three motherboard connectors used by the original A1A2, A1A4 and A1A5 assemblies.

Analog Test Repair Info

A1A2 Z Axis Amplifier, Circuit Description (Serial Number Prefixes: 2403A–3001A)

A1A2 Z Axis Amplifier receives from A3A2 Intensity Control two signals for control of the CRT: a 0 V – 2 V Z signal proportional to the CRT writing rate, and a blanking signal LBLANK.

Amplifier Ⓐ

The Z signal, after attenuation by the front-panel INTENSITY potentiometer A1R1, drives the input stage Q9–Q10. This amplifier supplies a differential current output to the Focus Gate Amplifier and, through a Blanking Switch, to the Control Gate Amplifier.

Blanking Switch Ⓑ
Control Gate Amplifier Ⓒ

The input to the Control Gate amplifier is a virtual-ground, current-summing junction. Its output voltage is given by:

$$V \approx I_{Q7}R25$$

Where I_{Q7} is the current in Q7, which is determined by the Z-axis input when LBLANK is high. When LBLANK is low, Q7 is off, and the output of the Control Gate amplifier drops to a few volts, blanking the CRT.

Focus Gate Amplifier Ⓓ

The Focus Gate Amplifier supplies a correction voltage to the FOCUS grid of the CRT to compensate for defocusing effects with varying intensity levels. The magnitude of this correction voltage is set by FOCUS GAIN potentiometer R30 and the front-panel FOCUS screwdriver adjustment A1R2. The output stage is identical to that of the Control Gate Amplifier except for the pulse response adjustments (HF GAIN potentiometer R22 and HF TRIM capacitor C10 in the Control Gate Amplifier). These components are fixed in the Focus Gate Amplifier.

CRT Adjustments Ⓔ

The CRT Adjustments set the bias voltage for the various CRT functions. Each adjustment name is indicated on the schematic.

Analyzer Repair Inc.

A1A2 XYZ Driver Amplifier (85662-60232), Circuit Description (Serial Number Prefixes: 3004A and Above)

Y Deflection Amplifier Ⓜ, Ⓞ, Ⓟ

The Y deflection amplifier consists of a single ended to differential voltage to current amplifier Ⓜ which drives two current to voltage output stages. The result is a differential voltage output to drive the positive and negative Y deflection plates of the CRT. The output has an average (common mode) voltage of approximately 55 V (equal to the first accelerator voltage of the CRT).

The voltage to current Y Preamplifier Ⓜ consists of a differential pair Q113 and Q114 with a constant current emitter bias supplied by Q115. R127 is used to adjust the collector bias to position the beam in the center of the CRT when the input voltage is 1 V. This adjustment also makes up for gun misalignment in the CRT.

Q111 and Q112 are voltage gain stages and Q109 and Q110 are voltage to current converters that drive a virtual ground input to the two current to voltage output stages with equal but opposite signals. The gain of the Q109 and Q110 stage is determined by the emitter resistance. The differential gain is adjusted by R120 and R119 and the common mode current is set by R118 and R120.

The current to voltage stages, Ⓞ and Ⓟ, are identical so only Y+ Current to Voltage Amplifier Ⓞ is described. The Y+ amplifier consists of an active load (constant current source) made up of Q101, R101, R102 and R104 and a pull down transistor Q102. R102 and R104 set the base voltage of Q101 to a nominal dc level. R101, in the emitter of Q101, sets the current in the collector. Q102 is biased on by R102 and R104 and is held in linear operation by the emitter of Q104. R106 is the gain setting feedback resistor that maintains closed loop operation. R108 biases the current to voltage amplifier input to set the minimum output voltage to about 5.7 V with no collector current from Q109.

$$V_{out} = \left(\frac{R106}{R108}\right) 1\ 5 \quad \text{v}$$

In general, the output voltage of the current to voltage stage is determined by the current drawn from the input by Q109. This current is supplied by the feedback resistor R106. R106 is a 23.7 k resistor so the output voltage will rise 23.7 V for each milliamp of current drawn from the input node.

Q103 is a feed forward circuit to help speed up transient response. A rise or fall in input signal voltage will pass through the emitter follower formed by Q103 and R105 and then are ac coupled through C102 and C103 to the base of Q102. C102 also couples this voltage to the base of Q101. With the emitter bypassed against rapid voltage changes by C101, the active load current is also modulated to help the ac response of the output stage.

CR102, CR103, R140 and spark gap E101 are an output protection network to protect the amplifier from arcs inside the CRT or in the cabling to the CRT.

Buffer Amplifiers Ⓙ

There are two buffer amplifiers that are used to supply buffered copies of the Y signal to other uses. One, U101B, is used to drive the rear panel Aux Y output. The other copy of the Y signal is buffered by U101A and is used in the dynamic focus correction for beam position (see FOCUS below).

X Deflection Amplifier Ⓝ, Ⓡ, Ⓢ
X Buffer Amplifiers Ⓛ

The X Deflection Amplifier and X Buffer Amplifier are identical to the Y Deflection Amplifier Ⓜ, Ⓞ, Ⓟ and Y Buffer Amplifier Ⓙ described previously.

Intensity Control Ⓐ, Ⓑ, Ⓕ

The intensity section takes brightness information from the line generator section (A3) of the machine and provides analog modulation of the CRT and digital blanking.

Brightness Ⓐ provides a high impedance input buffer (U401B) for the Z axis signal that comes from the wiper of the front panel intensity control. The output of U401B is used by the brightness amplifier (U401D) and by the Focus Intensity Compensation Amplifier Ⓑ U401C.

The pot R319 is used to set the analog gain of the intensity amplifier. This adjustment is used to calibrate the brightness of the CRT using a known test pattern and a light meter. R316, R318, and R319 set the gain of the amplifier, while R317 is used to set the output offset. This offset is used to set the overall minimum analog output level of the Control Gate Amplifier Ⓗ. This level corresponds to the dc level at the Control Gate Amplifier output that will be translated to the CRT cutoff voltage by the A1A3 High Voltage Regulator board. R315 is used to translate the voltage brightness signal from U401D into a current at the emitters of Q305 and Q306 of the Blanking Switch Ⓕ. CR303 is used to prevent the emitter voltage of Q305 and Q306 from going positive during turn on and damaging the base emitter junctions.

The Blanking Switch Ⓕ consists of a differential pair current switch, Q305 and Q306. The base of Q305 is biased at -1.9 V by R309 and R310. The base of Q306 is driven from a TTL signal (BLANK, low = dark) that is translated down in voltage by R311, R312, and R314 such that the signal at the base will swing either side of the -1.9 volt level on the other side of the differential pair. The result is that when BLANK is low, Q305 will be on, Q306 will be off, and the brightness current signal from R315 will be drawn through the collector of Q305 from ground. No current will be drawn from the input of the current to voltage amplifier.

When BLANK is high, Q306 will be on and Q305 will be off. C305 is used as a speedup. In this case the brightness current signal from R315 will be drawn through the collector of Q306 from the virtual ground input of the current to voltage amplifier.

R329 is used to set a minimum current draw at the input of the current to voltage amplifier to set the minimum output voltage level when the brightness signal is blanked.

Control Gate Amplifier Ⓗ

The current to voltage amplifier output stage for the Z Axis amplifier is similar in concept to the one used in the X and Y Current to Voltage Amplifiers. There are some significant differences in the input stages however. The active load current source is formed by Q301, R301, R302, and R305. The emitter of Q303 is at a fixed dc level of three base-emitter junction voltages above ground (approximately 1.8 V). R302 and R305 develop a fixed dc voltage at the base of Q301 and thus establish a fixed dc current in the emitter resistor, R301. The emitter current translates into a fixed dc collector current source acting as a pullup for the output node. Q302 acts as a common emitter pull down for the output node. Q304 is an emitter follower driver for Q302 giving a large open-loop current gain in the pull-down half of the amplifier. R307 is the feedback resistor that determines the closed loop current to voltage gain of the stage. Q303 provides the dc bias path for Q301, Q302, and Q304, and also acts as an ac feed forward amplifier to improve the transient response of the amplifier both by modulating the current source load, Q301, and the pull down stage, Q302.

C307 is used to provide a zero in the feedback path to compensate the high frequency response of the amplifier. R308 and C304 are also used to adjust the high frequency response. These two adjustments are used to optimize the step response of the amplifier when the blanking signal is switched on and off. The rising edge is adjusted for best rise time without overshoot. Any overshoot shows up as intensity modulation at the beginning of a vector. The falling edge is not as critical for overshoot because the beam is off. Both rise and fall times are critical because if they are too slow, vectors will have tails as the beam moves during the transition time or there will be gaps between vectors that are supposed to be continuous lines. Typically this design yields rise and fall times of 40 ns in response to the blank signal. The rise and fall times for the brightness signal are about 150 ns. This signal path includes the op amp stages U101B and U101D which determine the response time. The brightness signal has one microsecond to settle between each vector so this signal path is much faster than the signal that it needs to carry.

Focus Controls Ⓒ, Ⓓ, Ⓔ, Ⓖ

The focus control section consists of a dc focus voltage that is established by the A1A3 board and the Focus Gate signal that is generated by the A1A2 board. The focus gate signal is composed of four separate input terms fed to a virtual ground summing node at the input of a current to voltage amplifier. The output of this amplifier is coupled onto the dc focus voltage generated on the A1A3 board and applied to the focus electrode of the CRT.

The four focus terms are the intensity correction, front panel FOCUS and correction for the curvature of focus field, top/bottom and right/left. The Focus Gate Amplifier Ⓖ is nearly identical to the Control Gate Amplifier Ⓗ except the high frequency compensation of the focus amplifier is not adjustable and CR404 and CR405 were added to bring the summing node voltage down to 0 V so that the top/bottom and left/right adjustment attenuators could be referenced to ground.

Focus must be corrected for beam intensity. The focus voltage needs to be made more negative as the beam current increases. This is done by taking the intensity signal from U401B Ⓑ and feeding it to a variable gain stage formed by U401C, R409, R410, and R411. This amplifier has an adjustable gain of from zero to approximately three. With Z axis signals of zero to two volts this gives a maximum of minus six volts output from U401C. R412 (511 Ω) translates this voltage into approximately 12 mA maximum. This would translate to over 140 V correction at the Focus Gate output if the FOCUS COMP pot, R409 were set to

maximum. Typically it takes about -40 to −50 V correction from minimum to maximum brightness.

Focus also needs to be "fine tuned" from the front panel. The front panel control is a 25K pot with the two ends tied to +15 V and -15 V with the wiper brought to the A1A2 Front Panel Focus ©. The front panel signal is fed to an amplifier formed by U401A, R413 and R415. C412 compensates the amplifier for less than unity gain by creating a poll at 28 Hz. C411 provides a passive filter on the input line. This was found to be necessary due to signal pickup from the focus gate output signal by the PC trace between R413 and the input of U401A that caused instability. R416 translates the approximately f7.5 volt output of U401A into a current at the summing node of ±3.5 mA as the front panel focus knob is rotated from one extreme to the other. This translates to a focus voltage range of ±40 V. Nominally the instrument focus is set up such that the front panel knob is in the center of its rotation and therefore is not producing any net current into the summing node.

The other two terms in the focus voltage correction signal are the top/bottom and the right/left focus corrections. The CRT has significant curvature of the focus plane. As the beam is deflected away from the center of the CRT, the focus voltage needed to give optimum focus becomes more positive. Typically it requires 20 V at the right and left edges and 10 V at the top and bottom to give the best overall focus. Top & Bottom Focus Ⓓ and Right & Left Focus Ⓔ contain identical offset absolute-value circuits. Since these two circuits are identical, only the Top & Bottom Focus Ⓓ is described.

The concept of this circuit is to generate a voltage that is proportional to the distance from the center of the screen. Ideally, a parabolic function is desired. A three part piecewise linear approximation will be adequate as the actual focus voltage requirements are not extremely critical. What this circuit actually produces is a truncated, inverted "vee" current at the input of the focus amplifier.

R425 and R427 provide a reference voltage for the offset of the absolute value. Normally R427 is set to give a one volt reference. This is nominally the video voltage that represents center screen (0 V = bottom, 2 V = top of screen) and will therefore give a symmetrical correction. Some individual CRTs will not be exactly symmetrical and will require that the offset voltage for the correction be moved to get the best compromise of top to bottom focus.

With an input, both U402A and U402B positive inputs will be at positive one volt. Both of these amplifiers are in a closed loop condition, therefore, the negative inputs are also at plus one volt. Given these conditions, R417 and R420 have no voltage across them and therefore are not carrying any current. Since net current at the negative input node of U402B must be zero the algebraic sum of the currents in R418 and R419 must be zero. R418 and R421 have plus one volt at their extreme ends so any difference in the current in R418 and R421 must be flowing in CR408. CR409 would have to carry an equal and opposite current from R419, but CR408 and CR409 can't both be on at the same time due to their polarity. There is no current in R418, R419 and R421, the output of U402B will be at plus one volt plus or minus one diode drop depending on whether the input is slightly below or above the reference, but no current is flowing in either diode.

With no current flowing in R420 or R421 there is no current in R423. The output of U402A must be at +1 V. R426 acts as an attenuator for the output of U402A. The summing input of the focus amplifier is nominally at 0 V so CR406 is reverse biased and there is no effect on the focus amplifier output for our +1 V (center screen) input signal.

With a 0 V input signal, R417 and R420 now have -1 V across each of them. Therefore, each of these 4 kΩ resistors will be carrying -0.25 mA. R418 must be carrying the same current as

R417 (CR409 prevents current from flowing into the U402B negative node) so R418 must have one volt across it and therefore the cathode of CR408 must be at plus two volts. R421 has plus one volt across it and therefore is conducting 0.5 mA into the negative node of U402A. R420 is drawing 0.25 mA from this same node so the difference, 0.25 mA, must be flowing out of this node through R423. The output of U402A is at -4.4 V. Current is drawn from the amplifier summing node through CR406 from approximately -0.6 V at the cathode of CR406. This puts 3.8 V across R424 (maximum with R426 in a full clockwise position, zero with R426 in a full counter clockwise position). This current is summed into the focus amplifier input and produces the correction for beam position.

The right/left focus correction is identical to the top/bottom. Both circuits sum into the Focus Gate Amplifier input. The result is an asymmetrical, upside-down, truncated pyramid approximation to an asymmetrical parabolic bowl. By adjusting the heights and offsets of the pyramid for the best fit to the bowl one can achieve a focus uniformity over the whole CRT screen.

Analyzer Repair Inc.

HP Part Number 85662-60100

A1A2 Z Axis Amplifier

Reference Designation	HP Part Number	C D	Qty	Description	Mfr Code	Mfr Part Number
A1A2	85662-60100	1	1	Z AXIS AMPLIFIER BOARD ASSEMBLY (SERIAL PREFIXES: 2403A-3001A)	28480	85662-60100
A1A2C1	0180-0374	3	1	CAPACITOR-FXD 10UF+-10% 20VDC TA	56289	150D106X9020B2-DYS
A1A2C2	0180-0374	3	1	CAPACITOR-FXD 10UF+-10% 20VDC TA	56289	150D106X9020B2-DYS
A1A2C3	0160-3670	6	1	CAPACITOR-FXD .1UF +-20% 200VDC CER	04222	SR302E104MAAH
A1A2C4	0160-4084	8	1	CAP-FXD 0.1uF 50 V	56289	1C20X7R104M050B
A1A2C5	0160-4084	8	1	CAP-FXD 0.1uF 50 V	56289	1C20X7R104M050B
A1A2C6	0160-2204	0	1	CAPACITOR-FXD 100PF +-5% 300VDC MICA	09023	CD15FD101J03
A1A2C7	0160-2308	5	1	CAPACITOR-FXD 36PF +-5% 300VDC MICA	09023	CD15ED360J03
A1A2C8	0160-3670	6	1	CAPACITOR-FXD .1UF +-20% 200VDC CER	04222	SR302E104MAAH
A1A2C9	0160-3670	6	1	CAPACITOR-FXD .1UF +-20% 200VDC CER	04222	SR302E104MAAH
A1A2C10	0121-0474	0	1	CAP-VAR 3pF 1.5pF 600 V FEP	74970	273-0001-002
A1A2C11	0160-3670	6	1	CAPACITOR-FXD .1UF +-20% POOVDC CER	04222	SR302E104MAAH
A1A2C12	0160-3670	6	1	CAPACITOR-FXD .1UF +-20% 200VDC CER	04222	SR302E104MAAH
A1A2C13	0160-3670	6	1	CAPACITOR-FXD .1UF +-20% POOVDC CER	04222	SR302E104MAAH
A1A2C14	0160-4084	8	1	CAP-FXD 0.1uF 50 V	56289	1C20X7R104M050B
A1A2C15	0160-4084	8	1	CAP-FXD 0.1uF 50 V	56289	1C20X7R104M050B
A1A2C16	0180-0269	5	1	CAP-FXD 1uF 150 V AL-ELCTLT	56289	30D105F150BA2
A1A2C17	0160-4084	8	1	CAP-FXD 0.1uF 50 V	56289	1C20X7R104M050B
A1A2C18	0160-2204	0	1	CAPACITOR-FXO 100PF +-5% 300VDC MICA	09023	CD15FD101J03
A1A2C19	0160-3670	6	1	CAPACITOR-FXD .1UF +-20% 200VDC CER	04222	SR302E104MAAH
A1A2C20	0160-2238	0	1	CAP-FXD 1.5pF 500 V	52763	
A1A2C21	0160-3670	6	1	CAPACITOR-FXD .1UF +-20% 200VDC CER	04222	SR302E104MAAH
A1A2C22	0160-3670	6	1	CAPACITOR-FXD .1UF +-20% 200VDC CER	04222	SR302E104MAAH
A1A2C23	0160-3670	6	1	CAPACITOR-FXD .1UF +-20% 200VDC CER	04222	SR302E104MAAH
A1A2CR1	1901-0535	3	1	DIODE-SCHOTTKY SM SIG		
A1A2CR2	1901-0096	7	1	DIODE-SWITCHING 120V 50MA 100NS	9N171	1N3070
A1A2CR3	1901-0028	5	1	DIODE-PWR RECT 400V 750MA DO-29	04713	
A1A2CR4	1901-0028	5	1	DIODE-PWR RECT 400V 750MA DO-29	04713	
A1A2CR5	1901-0096	7	1	DIODE-SWITCHING 120V 50MA 100NS	9N171	1N3070
A1A2CR6	1901-0028	5	1	DIODE-PWR RECT 400V 750MA DO-29	04713	
A1A2CR7	1901-0028	5	1	DIODE-PM RECT 400V 750MA DO-29	04713	
A1A2E1	3170-0029	3	1	CORE-SHIELDING BEAD	02114	56-590-65A2/4A
A1A2L1	3140-0210	1	1	INDUCTOR RF-CH-MLD 100UH +-5% .166D-INX.	99800	1537-76
A1A2L2	3140-0210	1	1	INDUCTOR RF-CH-MLD 100UH +-5% .166D-INX.	99800	1537-76
A1A2L3	3140-0210	1	1	INDUCTOR RF-CH-MLD 100UH +-5% .166D-INX.	99800	1537-76
A1A2MP1	1200-0185	3	4	INSULATOR-XSTR NYLON	13103	7717-86N RED
A1A2MP2	1205-0095	3	4	HEAT SINK SGL TO-5/TO-39-CS	13103	22258
A1A2MP3	5000-9043	5	1	SIN-ROLL .062-IN-DIA .25-IN-LB	28480	5000-9043
A1A2MP4	5040-6843	2	1	EXTRACTOR	28480	5040-6843
A1A2MP5				YOT ASSIGNED		
A1A2Q1	1853-0232	3	1	TRANSISTOR PNP SI TO-39 PD=1W FT=200MHZ	04713	
A1A2Q2	1854-0813	5	1	TRANSISTOR NPN 2N3501S SI TO-39 PD=1W	04713	2N3501(SEL)
A1A2Q3	1853-0232	3	1	TRANSISTOR PNP SI TO-39 PD=1W FT=200MHZ	04713	
A1A2Q4	1853-0007	7	1	TRANSISTOR PNP 213251 SI TO-18 PD=360MW	04713	2N3251
A1A2Q5	1854-0404	0	1	TRANSISTOR NPN SI TO-18 PD=360MW	04713	
A1A2Q6	1854-0813	5	1	TRANSISTOR NPN 2N3501S SI TO-39 PD=1W	04713	2N3501(SEL)

**Indicates factory-selected value*

HP Part Number 85662-60100

Al A2 Z Axis Amplifier

Reference Designation	HP Part Number	C D	Qty	Description	Mfr Code	Mfr Part Number
A1A2Q7	1854-0404	(	1	TRANSISTOR NPN SI TO-18 PD=360MW	0471:	
A1A2Q8	1854-0404	(	1	TRANSISTOR NPN SI TO-18 PD=360MW	0471:	
A1A2Q9	1853-0007	7	1	TRANSISTOR PNP 213251 SI TO-18 PD=360MW	0471:	2N3251
A1A2Q10	1853-0007	7	1	TRANSISTOR PNP 213251 SI TO-18 PD=360MW	0471:	2N3251
A1A2Q11	1853-0007	/	1	TRANSISTOR PNP 2N3251 SI TO-18 PD=360MW	0471:	2N3251
A1A2Q12	1854-0404	(	1	TRANSISTOR NPN SI TO-18 PD=360MW	0471:	
A1A2Q13	1854-0404	(	1	TRANSISTOR NPN SI TO-18 PD=360MW	04713	
A1A2Q14	1854-0404	(	1	TRANSISTOR NPN SI TO-18 PD=360MW	04713	
A1A2Q15	1854-0404	(	1	TRANSISTOR NPN SI TO-18 PD=360MW	04713	
A1A2Q16	1854-0404	(	1	TRANSISTOR NPN SI TO-18 PD=360MW	04713	
A1A2R1	0757-0394	(	1	RESISTOR 51.1 +-1% .125W TF TC=0+-100	19701	SFR25H
A1A2R2	0757-0394	(	1	RESISTOR 51.1 +-1% .125W TF TC=0+-100	19701	SFR25H
A1A2R3	0757-0442	9	1	RESISTOR 10K +-1% .125W TF TC=0+-100	19701	SFR25H
A1A2R4	0757-0394	(	1	RESISTOR 51.1 +-1% .125W TF TC=0+-100	19701	SFR25H
A1A2R5	2100-3351	6	1	RESISTOR-TRMR 500 10% TKF SIDE-AOJ 1-TRN	32997	3386X-Y46-501
A1A2R6	0757-0394	(	1	RESISTOR 51.1 +-1% .125W TF TC=0+-100	19701	SFR25H
A1A2R7	0757-0200	7	1	RESISTOR 5.62K +-1% .125W TF TC=0+-100	19701	SFR25H
A1A2R8	0757-0416	7	1	RESISTOR 511 +-1% .125W TF TC=0+-100	19701	SFR25H
A1A2R9*	0757-0200	7	1	RESISTOR 5.62K +-1% .125W TF TC=0+-100	19701	SFR25H
A1A2R10	0757-0441	8	1	RESISTOR 8.25K +-1% .125W TF TC=0+-100	19701	SFR25H
A1A2R11	0698-0085	0	1	RESISTOR 2.61K 1% .125W TF TC=0+-100	19701	SFR25H
A1A2R12	0757-0443	0	1	RESISTOR 11K +-1% .125W TF TC=0+-100	19701	SFR25H
A1A2R13	0757-0280	3	1	RESISTOR 1K +-1% .125W TF TC=0+-100	19701	SFR25H
A1A2R14	0757-0280	3	1	RESISTOR 1K +-1% .125W TF TC=0+-100	19701	SFR25H
A1A2R15	0757-0346	2	1	RESISTOR 10 +-1% .125W TF TC=0+-100	91637	CMF-55-1. T-1
A1A2R16	0698-0084	9	1	RESISTOR 2.15K 1% .125W TF TC=0+-100	19701	SFR25H
A1A2R17	0757-0280	3	1	RESISTOR 1K +-1% .125W TF TC=0+-100	19701	SFR25H
A1A2R18	0698-0084	9	1	RESISTOR 2.15K 1% .125W TF TC=0+-100	19701	SFR25H
A1A2R19	0757-0421	4	1	RESISTOR 825 +-1% .125W TF TC=0+-100	19701	SFR25H
A1A2R20	0757-0428	1	1	RESISTOR 1.62K +-1% .125W TF TC=0+-100	19701	SFR25H
A1A2R21	0757-0443	a	1	RESISTOR 11K +-1% .125W TF TC=0+-100	19701	SFR25H
A1A2R22	2100-3207	1	1	RESISTOR-TRMR 5K 10% TKF SIDE-AOJ 1-TRN	32997	3386X-146-502
A1A2R23	0698-3152	a	1	RESISTOR 3.48K 1% .125W TF TC=0+-100	19701	SFR25H
A1A2R24	0698-3416	7	1	RESISTOR 21.5K 1% .5W TF TC=0+-100	19701	505311
A1A2R25	0757-0841	2	1	RESISTOR 12.1K +-1% .5W TF TC=0+-100	19701	5053R
A1A2R26	0698-3151	7	1	RESISTOR 2.87K 1% .125W TF TC=0+-100	19701	SFR25H
A1A2R27	0757-0394	0	1	RESISTOR 51.1 +-1% .125W TF TC=0+-100	19701	SFR25H
A1A2R28	0757-0394	0	1	RESISTOR 51.1 +-1% .125W TF TC=0+-100	19701	SFR25H
A1A2R29	0757-0819	4	1	RESISTOR 909 +-1% .5W TF TC=0+-100	19701	5053R
A1A2R30	2100-3351	6	1	RESISTOR-TRMR 500 10% TKF SIDE-AOJ 1-TRN	32997	3386X-Y46-501
A1A2R31	2100-3353	8	1	RESISTOR-TRMR 20K 10% TKF SIDE-AOJ 1-TRN	32997	3386X-146-203
A1A2R32	2100-3355	0	1	RESISTOR-TRMR 100K 10% TKF SIDE-AOJ 1-TR	32997	3386X-Y46-104
A1A2R33	0698-3158	4	1	RESISTOR 23.7K 1% .125W TF TC=0+-100	19701	SFR25H
A1A2R34	0757-0280	3	1	RESISTOR 1K +-1% .125W TF TC=0+-100	19701	SFR25H
A1A2R35	2100-3354	9	1	RESISTOR-TRMR 50K 10% TKF SIDE-AOJ 1-TRN	32997	3386X-Y46-503
A1A2R36	2100-3354	9	1	RESISTOR-TRMR SOK 10% TKF SIDE-AOJ 1-TRN	32997	3386X-Y46-503
A1A2R37	0698-0084	9	1	RESISTOR 2.15K 1% .125W TF TC=0+-100	19701	SFR25H
A1A2R38	1698-3440	7	1	RESISTOR 196 1% .125W TF TC=0+-100	19701	SFR25H

**Indicates factory-selected value*

HP Part Number 85662-60100

A1A2 z Axis Amplifier

Reference Designation	HP Part Number	C D	Qty	Description	Mfr Code	Mfr Part Number
A1A2R39	0757-0274	5	1	RESISTOR 1.21K +-1% .125W TF TC=0+-100	19701	SFR25H
A1A2R40	0698-3440	7	1	RESISTOR 196 1% .125W TF TC=0+-100	19701	SFR25H
A1A2R41	0757-0200	7	1	RESISTOR 5.62K +-1% .125W TF TC=0+-100	19701	SFR25H
A1A2R42	0757-0421	4	1	RESISTOR 825 +-1% .125W TF TC=0+-100	19701	SFR25H
A1A2R43	0757-0442	9	1	RESISTOR 10K +-1% .125W TF TC=0+-100	19701	SFR25H
A1A2R44	0757-0280	3	1	RESISTOR 1K +-1% .125W TF TC=0+-100	19701	SFR25H
A1A2R45	0698-3152	8	1	RESISTOR 3.481: 1% .125W TF TC=0+-100	19701	SFR25H
A1A2R46	0698-3416	7	1	RESISTOR 21.5K 1% .5W TF TC=0+-100	19701	5053R
A1A2R47	0757-0841	2	1	RESISTOR 12.1K +-1% .5W TF TC=0+-100	19701	5053R
A1A2R48	0698-3151	7	1	RESISTOR 2.87K 1% .125W TF TC=0+-100	19701	SFR25H
A1A2R49	0757-0394	0	1	RESISTOR 51.1 +-1% .125W TF TC=0+-100	19701	SFR25H
A1A2R50	0757-0394	0	1	RESISTOR 51.1 +-1% .125W TF TC=0+-100	19701	SFR25H
A1A2R51	0757-0819	4	1	RESISTOR 909 +-1% .5W TF TC=0+-100	19701	5053R
A1A2TP1	0360-0535	0	1	TERMINAL-TEST POINT .330IN ABOVE	46819	
A1A2TP2	0360-0535	0	1	TERMINAL-TEST POINT .330IN ABOVE	46819	
A1A2TP3	0360-0535	0	1	TERMINAL-TEST POINT .330IN ABOVE	46819	
A1A2VR1	1902-3333	3	1	DIODE-ZNR 46.4V 5% DO-35 PD=.4W	04713	
A1A2VR2	1902-3357	1	1	DIODE-ZNR 56.2V 5% DO-7 PD=.4W TC=+.081%	04713	
A1A2VR3	1902-0049	2	1	DIODE-ZNR 6.19V 5% DO-35 PD=.4W	04713	

Analyzer Repair Inc.

**Indicates factory-selected value*

HP Part Number 85662-60236

A1A2 XYZ Driver Amplifier

Reference Designatior	HP Part Number	C D	Qty	Description	Mfr Code	Mfr Part Number
A1A2	85662-60236		1	XYZ DRIVER AMPLIFIER BOARD ASSEMBLY (SERIAL PREFIX: 3004A)	2848(	85662-60236
A1A2C101	0160-3670	(	1	CAP-FXO 0.1uF 200 V	0201(	SR302E104MAAH
A1A2C102	0160-3026	(	1	CAP-FXO 0.01uF 200 V	0566E	VK33BW103K
A1A2C103	0160-3026	(	1	CAP-FXO 0.01uF 200 V	0566E	VK33BW103K
A1A2C104	0121-0474	I	1	CAP-VAR 3pF 1.5pF 600 V FEP	0467(	273-0001-002
A1A2C105	0160-4808	4	1	CAP-FXO 470pF 100 V	0201(	SA101A471JAAH
A1A2C106	0160-3670	(	1	CAP-FXO 0.1uF 200 V	0201(	SR302E104MAAH
A1A2C107	0160-3026	(	1	CAP-FXO 0.01uF 200 V	0566E	VK33BW103K
A1A2C108	0160-3026	(	1	CAP-FXO 0.01uF 200 V	0566E	VK33BW103K
A1A2C109	0121-0474	(	1	CAP-VAR 3pF 1.5pF 600 V FEP	0467(	273-0001-002
A1A2C110	0160-4835	7	1	CAP-FXO 0.1uF 50 V	0201(	SA115C104KAAH
A1A2C111	0160-4835	7	1	CAP-FXO 0.1uF 50 V	0201(	SA115C104KAAH
A1A2C112	0160-3670	(	1	CAP-FXO 0.1uF 200 V	0201(	SR302E104MAAH
A1A2C113	0180-4136	3	1	CAP-FXO 10uF 20 V TA	0420(	173D106X9020W
A1A2C114	0160-4835	7	1	CAP-FXO 0.1uF 50 V	0201(	SA115C104KAAH
A1A2C115	0160-4835	7	1	CAP-FXO 0.1uF 50 V	02010	SA115C104KAAH
A1A2C116	0160-4835	7	1	CAP-FXO 0.1uF 50 V	0201(	SA115C104KAAH
A1A2C117	0180-4136	3	1	CAP-FXO 10uF 20 V TA	04200	173D106X9020W
A1A2C119	0160-4835	7	1	CAP-FXO 0.1uF 50 V	02010	SA115C104KAAH
A1A2C120	0160-4835	7	1	CAP-FXO 0.1uF 50 V	02010	SA115C104KAAH
A1A2C121	0160-3670	(	1	CAP-FXO 0.1uF 200 V	02010	SR302E104MAAH
A1A2C122	0160-3670	(	1	CAP-FXO 0.1uF 200 V	02010	SR302E104MAAH
A1A2C201	0160-3670	(	1	CAP-FXO 0.1uF 200 V	02010	SR302E104MAAH
A1A2C202	0160-3026	(	1	CAP-FXO 0.01uF 200 V	05668	VK33BW103K
A1A2C203	0160-3026	(	1	CAP-FXO 0.01uF 200 V	05668	VK33BW103K
A1A2C204	3121-0474	(	1	CAP-VAR 3pF 1.5pF 600 V FEP	04670	273-0001-002
A1A2C205	0160-4808	4	1	CAP-FXO 470pF 100 V	02010	SA101A471JAAH
A1A2C206	0160-3670	(	1	CAP-FXO 0.1uF 200 V	02010	SR302E104MAAH
A1A2C207	3160-3026	(	1	CAP-FXO 0.01uF 200 V	05668	VK33BW103K
A1A2C208	0160-3026	(	1	CAP-FXO 0.01uF 200 V	05668	VK33BW103K
A1A2C209	0121-0474	(	1	CAP-VAR 3pF 1.5pF 600 V FEP	04670	273-0001-002
A1A2C210	1160-4835	7	1	CAP-FXO 0.1uF 50 V	02010	SA115C104KAAH
A1A2C211	0160-4835	7	1	CAP-FXO 0.1uF 50 V	02010	SA115C104KAAH
A1A2C212	1160-3670	(	1	CAP-FXO 0.1uF 200 V	02010	SR302E104MAAH
A1A2C213	1180-4136	3	1	CAP-FXO 10uF 20 V TA	04200	173D106X9020W
A1A2C214	1160-4835	7	1	CAP-FXO 0.1uF 50 V	02010	SA115C104KAAH
A1A2C215	1160-4835	7	1	CAP-FXO 0.1uF 50 V	02010	SA115C104KAAH
A1A2C216	0160-4835	7	1	CAP-FXO 0.1uF 50 V	02010	SA115C104KAAH
A1A2C217	0180-4136	3	1	CAP-FXO 10uF 20 V TA	04200	173D106X9020W
A1A2C219	1160-4835	7	1	CAP-FXO 0.1uF 50 V	02010	SA115C104KAAH
A1A2C220	0160-4835	7	1	CAP-FXO 0.1uF 50 V	02010	SA115C104KAAH
A1A2C221	0160-3670	(	1	CAP-FXO 0.1uF 200 V	02010	SR302E104MAAH
A1A2C222	0160-3670	(	1	CAP-FXO 0.1uF 200 V	02010	SR302E104MAAH
A1A2C301	0160-3670	(	1	CAP-FXO 0.1uF 200 V	02010	SR302E104MAAH
A1A2C302	0160-3670	(	1	CAP-FXO 0.1uF 200 V	02010	SR302E104MAAH
A1A2C303	1160-3670	(	1	CAP-FXO 0.1uF 200 V	02010	SR302E104MAAH

Analyzer Repair Inc.

**Indicates factory-selected value*

HP Part Number 85662-60236

A1A2 XYZ Driver Amplifier

Reference Designatior	HP Part Number	C D	Qty	Description	Mfr Code	Mfr Part Number
A1A2C304	0160-5913		1	CAP-FXO 36pF 200 V	06352	MA12C0G2D360J
A1A2C305	0160-4801		1	CAP-FXO 100pF 100 V	02011	SA102A101JAAH
A1A2C306	0160-4835		1	CAP-FXO 0.1uF 50 V	0201C	SA115C104KAAH
A1A2C307	0121-0474		1	CAP-VAR 3pF 1.5pF 600 V FEP	0467C	273-0001-002
A1A2C308	0160-3670		1	CAP-FXO 0.1uF 200 V	0201C	SR302E104MAAH
A1A2C309	0160-3670		1	CAP-FXO 0.1uF 200 V	0201C	SR302E104MAAH
A1A2C310	0180-0269		1	CAP-FXO 1uF 150 V AL-ELCTLT	00493	150T1R0T6X13M
A1A2C311	0180-4136		1	CAP-FXO 10uF 20 V TA	04200	173D106X9020W
A1A2C313	0160-4835		1	CAP-FXO 0.1uF 50 V	02010	SA115C104KAAH
A1A2C314	0160-4835		1	CAP-FXO 0.1uF 50 V	02010	SA115C104KAAH
A1A2C315	0180-4136		1	CAP-FXO 10uF 20 V TA	04200	173D106X9020W
A1A2C316	0160-4835		1	CAP-FXO 0.1uF 50 V	02010	SA115C104KAAH
A1A2C317	0160-4835		1	CAP-FXO 0.1uF 50 V	02010	SA115C104KAAH
A1A2C318	0160-4835		1	CAP-FXO 0.1uF 50 V	02010	SA115C104KAAH
A1A2C401	0160-3670	6	1	CAP-FXO 0.1uF 200 V	02010	SR302E104MAAH
A1A2C402	0160-3670	6	1	CAP-FXO 0.1uF 200 V	02010	SR302E104MAAH
A1A2C403	0160-3670	6	1	CAP-FXO 0.1uF 200 V	02010	SR302E104MAAH
A1A2C404	0160-4801	7	1	CAP-FXO 100pF 100 V	02010	SA102A101JAAH
A1A2C405	0160-2238	0	1	CAP-FXO 1.5pF 500 V	01468	
A1A2C406	0160-4835	7	1	CAP-FXO 0.1uF 50 V	02010	SA115C104KAAH
A1A2C407	0160-4835	7	1	CAP-FXO 0.1uF 50 V	02010	SA115C104KAAH
A1A2C408	0160-4835	7	1	CAP-FXO 0.1uF 50 V	02010	SA115C104KAAH
A1A2C409	0160-4835	7	1	CAP-FXO 0.1uF 50 V	02010	SA115C104KAAH
A1A2C410	0160-3670	6	1	CAP-FXO 0.1uF 200 V	02010	SR302E104MAAH
A1A2C411	0160-4835	7	1	CAP-FXO 0.1uF 50 V	02010	SA115C104KAAH
A1A2C412	0160-4835	7	1	CAP-FXO 0.1uF 50 V	02010	SA115C104KAAH
A1A2C501	0180-0269	5	1	CAP-FXO 1uF 150 V AL-ELCTLT	00493	150T1R0T6X13M
A1A2C503	0160-3670	6	1	CAP-FXO 0.1uF 200 V	02010	SR302E104MAAH
A1A2C504	0160-3670	6	1	CAP-FXO 0.1uF 200 V	02010	SR302E104MAAH
A1A2CR101	1901-0050	3	1	DIODE-SWITCHING 80V 200MA 2NS DO-35	00046	1N4150
A1A2CR102	1901-0028	5	1	DIODE-PWR RECT 400V 750MA DO-29	02037	
A1A2CR103	1901-0028	5	1	DIODE-PWR RECT 400V 750MA DO-29	02037	
A1A2CR104	1901-0028	5	1	DIODE-PWR RECT 400V 750MA DO-29	02037	
A1A2CR105	1901-0028	5	1	DIODE-PWR RECT 400V 750MA DO-29	02037	
A1A2CR106	1901-0050	3	1	DIODE-SWITCHING 80V 200MA 2NS DO-35	00046	1N4150
A1A2CR201	1901-0050	3	1	DIODE-SWITCHING 80V 200MA 2NS DO-35	00046	1N4150
A1A2CR202	1901-0028	5	1	DIODE-PWR RECT 400V 750MA DO-29	02037	
A1A2CR203	1901-0028	5	1	DIODE-PWR RECT 400V 750MA DO-29	02037	
A1A2CR204	1901-0028	5	1	DIODE-PWR RECT 400V 750MA DO-29	02037	
A1A2CR205	1901-0028	5	1	DIODE-PWR RECT 400V 750MA DO-29	02037	
A1A2CR206	1901-0050	3	1	DIODE-SWITCHING 80V 200MA 2NS DO-35	00046	1N4150
A1A2CR301	1901-0028	5	1	DIODE-PWR RECT 400V 750MA DO-29	02037	
A1A2CR302	1901-0028	5	1	DIODE-PWR RECT 400V 750MA DO-29	02037	
A1A2CR303	1901-0050	3	1	DIODE-SWITCHING 80V 200MA 2NS DO-35	00046	1N4150
A1A2CR401	1901-0028	5	1	DIODE-PWR RECT 400V 750MA DO-29	02037	
A1A2CR402	1901-0028	5	1	DIODE-PWR RECT 400V 750MA DO-29	02037	
A1A2CR404	1901-0050	3	1	DIODE-SWITCHING 80V 200MA 2NS DO-35	00046	1N4150
A1A2CR405	1901-0050	3	1	DIODE-SWITCHING 80V 200MA 2NS DO-35	00046	1N4150

Indicates factory-selected value

HP Part Number 85662-60236
A1A2 XYZ Driver Amplifier

Reference Designatior	HP Part Number	C D	Qty	Description	Mfr Code	Mfr Part Number
A1A2CR406	1901-0050		1	DIODE-SWITCHING 80V 200MA 2NS DO-35	0004E	1N4150
A1A2CR407	1901-0050		1	DIODE-SWITCHING 80V 200MA 2NS DO-35	0004E	1N4150
A1A2CR408	1901-0050	3	1	DIODE-SWITCHING 80V 200MA 2NS DO-35	0004E	1N4150
A1A2CR409	1901-0050	3	1	DIODE-SWITCHING 80V 200MA 2NS DO-35	0004E	1N4150
A1A2CR410	1901-0050	3	1	DIODE-SWITCHING 80V 200MA 2NS DO-35	0004E	1N4150
A1A2CR411	1901-0050	3	1	DIODE-SWITCHING 80V 200MA 2NS DO-35	0004E	1N4150
A1A2E1	9170-0029	3	1	CORE-SHIELDING BEAD	01887	56-590-65A2/4A
A1A2J4	1252-3179	6	1	7-PIN CONNECTOR	02946	69167-107
A1A2J5	1252-2154	5	1	CONN-POST TYPE .100-PIN-SPCG 5-CONT	02946	69167-105
A1A2L101	9140-0210	1	1	INDUCTOR RF-CH-ML0 100UH +-5% .166D-INX.	03273	15M103J
A1A2L102	9140-0210	I	1	INDUCTOR RF-CH-ML0 100UH +-5% .166D-INX.	03273	15M103J
A1A2L103	9140-0210	I	1	INDUCTOR RF-CH-ML0 100UH +-5% .166D-INX.	03273	15M103J
A1A2L201	9140-0210	1	1	INDUCTOR RF-CH-ML0 100UH +-5x .166D-INX.	03273	15M103J
A1A2L202	3140-0210	1	1	INDUCTOR RF-CH-ML0 100UH +-5% .166D-INX.	03273	15M103J
A1A2L203	3140-0210	1	1	INDUCTOR RF-CH-ML0 100UH +-5% .166D-INX.	03273	15M103J
A1A2L301	3140-0210	1	1	INDUCTOR RF-CH-ML0 100UH +-5% .166D-INX.	03273	15M103J
A1A2L302	3140-0210	1	1	INDUCTOR RF-CH-ML0 100UH +-5% .166D-INX.	03273	15M103J
A1A2L303	3140-0210	1	1	INDUCTOR RF-CH-ML0 100UH +-5% .166D-INX.	03273	15M103J
A1A2MP1				NOT ASSIGNED		
A1A2MP2	1040-0750	7	2	EXTR-PC BO RED POLYC .062-IN-BD-THKNS 1-	10401	
A1A2MP3	1480-0073	6	2	PIN-ROLL .062-IN-DIA .25-IN-LG BE-CU	04559	99-012-062-0250
A1A2MP4	1205-0095	0	1?	HEAT SINK SGL TO-5/TO-39-CS	02608	22258
A1A2MP5	)403-0026	6	1	PLUG-HOLE BOR-HO FOR .19-D-HOLE NYL	01924	207-120241-03-0101
A1A2MP6	)380-1194	1	1	STANDOFF-RN0 .594-IN-LG 4-40-THD	02038	P-535-M17-F16-440
A1A2MP7	:200-0143	0	1	SCREW-MACH 4-40 .375-IN-LG PAN-HO-POZI	01125	
A1A2MP8	:190-0003	8	1	UASHER-LK HLCL NO. 4 .115-IN-ID	04939	
A1A2MP10	0340-0595	C	1	INSULATOR-XSTR NYLON WHITE	02608	7717-131N WHITE
A1A2P6	1251-0600	C	1	CONNECTOR-SGL CONT PIN 1.14-MM-BSC-SZ SQ	01136	928-196-004140
A1A2P7	1251-0600	C	1	CONNECTOR-SGL CONT PIN 1.14-MM-BSC-SZ SQ	01136	928-196-004140
A1A2P8	1251-0600	C	1	CONNECTOR-SGL CONT PIN 1.14-MM-BSC-SZ SQ	01136	928-196-004140
A1A2P9	1251-0600	C	1	CONNECTOR-SGL CONT PIN 1.14-MM-BSC-SZ SQ	01136	928-196-004140
A1A2Q101	1853-0232	C	1	TRANSISTOR PNP SI TO-39 PD=1W FT=200MHZ	02037	
A1A2Q102	1854-0523	4	1	TRANSISTOR NPN SI TO-39 PD=1W FT=150MHZ	02037	
A1A2Q103	1854-0404	0	1	TRANSISTOR NPN SI TO-18 PD=360MW	02037	
A1A2Q104	1853-0007	7	1	TRANSISTOR PNP 213251 SI TO-18 PD=360MW	02037	2N3251
A1A2Q105	1853-0232	0	1	TRANSISTOR PNP SI TO-39 PD=1W FT=200MHZ	02037	
A1A2Q106	1854-0523	4	1	TRANSISTOR NPN SI TO-39 PD=1W FT=150MHZ	02037	
A1A2Q107	1854-0404	0	1	TRANSISTOR NPN SI TO-18 PD=360MW	02037	
A1A2Q108	1853-0007	7	1	TRANSISTOR PNP 2N3251 SI TO-18 PD=360MW	02037	2N3251
A1A2Q109	1854-0404	0	1	TRANSISTOR NPN SI TO-18 PD=360MW	02037	
A1A2Q110	1854-0404	0	1	TRANSISTOR NPN SI TO-18 PD=360MW	02037	
A1A2Q111	1853-0007	7	1	TRANSISTOR PNP 2N3251 SI TO-18 PD=360MW	02037	213251
A1A2Q112	1853-0007	7	1	TRANSISTOR PNP 2N3251 SI TO-18 PD=360MW	02037	2N3251
A1A2Q113	1853-0007	7	1	TRANSISTOR PNP 2N3251 SI TO-18 PD=360MW	02037	2N3251
A1A2Q114	1853-0007	7	1	TRANSISTOR PNP 213251 SI TO-18 PD=360MW	02037	2N3251
A1A2Q115	1853-0007	7	1	TRANSISTOR PNP 2N3251 SI TO-18 PD=360MW	02037	2N3251
A1A2Q201	.853-0232	0	1	TRANSISTOR PNP SI TO-39 PD=1W FT=200MHZ	02037	

**Indicates factory-selected value*

HP Part Number 85662-60236
A1A2 XYZ Driver Amplifier

Reference Designatior	HP Part Number	C D	Qty	Description	Mfr Code	Mfr Part Number
A1A2Q202	1854-0523		1	TRANSISTOR NPN SI TO-39 PD=1W FT=150MHZ	02037	
A1A2Q203	1854-0404		1	TRANSISTOR NPN SI TO-18 PD=360MW	02037	
A1A2Q204	1853-0007		1	TRANSISTOR PNP 2N3251 SI TO-18 PD=360MW	02037	213251
A1A2Q205	1853-0232		1	TRANSISTOR PNP SI TO-39 PD=1W FT=200MHZ	02037	
A1A2Q206	1854-0523		1	TRANSISTOR NPN SI TO-39 PD=1W FT=150MHZ	02037	
A1A2Q207	1854-0404		1	TRANSISTOR NPN SI TO-18 PD=360MW	02037	
A1A2Q208	1853-0007		1	TRANSISTOR PNP 2N3251 SI TO-18 PD=360MW	02037	2N3251
A1A2Q209	1854-0404		1	TRANSISTOR NPN SI TO-18 PD=360MW	02037	
A1A2Q210	1854-0404		1	TRANSISTOR NPN SI TO-18 PD=360MW	02037	
A1A2Q211	1853-0007		1	TRANSISTOR PNP 2N3251 SI TO-18 PD=360MW	02037	2N3251
A1A2Q212	1853-0007		1	TRANSISTOR PNP 2N3251 SI TO-18 PD=360MW	02037	2N3251
A1A2Q213	1853-0007		1	TRANSISTOR PNP 2N3251 SI TO-18 PD=360MW	02037	2N3251
A1A2Q214	1853-0007		1	TRANSISTOR PNP 2N3251 SI TO-18 PD=360MW	02037	2N3251
A1A2Q215	1853-0007		1	TRANSISTOR PNP 213251 SI TO-18 PD=360MW	02037	2N3251
A1A2Q301	1853-0232		1	TRANSISTOR PNP SI TO-39 PD=1W FT=200MHZ	02037	
A1A2Q302	1854-0419		1	TRANSISTOR NPN SI TO-39 PD=1W FT=200MHZ	02037	
A1A2Q303	1853-0007		1	TRANSISTOR PNP 2N3251 SI TO-18 PD=360MW	02037	2N3251
A1A2Q304	1854-0404		1	TRANSISTOR NPN SI TO-18 PD=360MW	02037	
A1A2Q305	1854-0404		1	TRANSISTOR NPN SI TO-18 PD=360MW	02037	
A1A2Q306	1854-0404		1	TRANSISTOR NPN SI TO-18 PD=360MW	02037	
A1A2Q401	.853-0232		1	TRANSISTOR PNP SI TO-39 PD=1W FT=200MHZ	02037	
A1A2Q402	.854-0419		1	TRANSISTOR NPN SI TO-39 PD=1W FT=200MHZ	02037	
A1A2Q403	.853-0007		1	TRANSISTOR PNP 2N3251 SI TO-18 PD=360MW	02037	2N3251
A1A2Q404	.854-0404		1	TRANSISTOR NPN SI TO-18 PD=360MW	02037	
A1A2R101	)757-0873		1	RESISTOR 1.62K +-1% .5W TF TC=0+-100	01074	H2
A1A2R102	)757-0438		1	RESISTOR 5.11K +-1% .125W TF TC=0+-100	00746	CRB14 OR CRB25
A1A2R103	)757-0346		1	RESISTOR 10 +-1% .125W TF TC=0+-100	00746	CR814 OR CR825
A1A2R104	)757-0851		1	RESISTOR 43.21: +-1% .5W TF TC=0+-100	01074	H2
A1A2R105	)757-0439		1	RESISTOR 6.81K +-1% .125W TF TC=0+-100	00746	CRB14 OR CRB25
A1A2R106	1698-3417		1	RESISTOR 23.71: 1% .5W TF TC=0+-100	01074	H2
A1A2R107	)757-0346		1	RESISTOR 10 +-1% .125W TF TC=0+-100	00746	CRB14 OR CRB25
A1A2R108	)757-0460		1	RESISTOR 61.9K +-1% .125W TF TC=0+-100	00746	CRB14 OR CR825
A1A2R109	)757-0873		1	RESISTOR 1.62K +-1% .5W TF TC=0+-100	01074	H2
A1A2R110	)757-0438		1	RESISTOR 5.11K +-1% .125W TF TC=0+-100	00746	CRB14 OR CRB25
A1A2R111	757-0346		1	RESISTOR 10 +-1% .125W TF TC=0+-100	00746	CRB14 OR CR825
A1A2R112	757-0851		1	RESISTOR 43.21: +-1% .5W TF TC=0+-100	01074	H2
A1A2R113	757-0439		1	RESISTOR 6.81K +-1% .125W TF TC=0+-100	00746	CR814 OR CR825
A1A2R114	698-3417		1	RESISTOR 23.7K 1% .5W TF TC=0+-100	01074	H2
A1A2R115	757-0346		1	RESISTOR 10 +-1% .125W TF TC=0+-100	00746	CRB14 OR CR825
A1A2R116	757-0460		1	RESISTOR 61.9K +-1% .125W TF TC=0+-100	00746	CRB14 OR CR825
A1A2R117	100-3273		1	RESISTOR-TRMR 2K 10% TKF SIDE-AOJ 1-TRN	03744	3386X-Y46-202
A1A2R118	698-3153		1	RESISTOR 3.831: 1% .125W TF TC=0+-100	00746	CR814 OR CRB25
A1A2R119	757-0419		1	RESISTOR 681 +-1% .125W TF TC=0+-100	00746	CRB14 OR CRB25
A1A2R120	100-3273		1	RESISTOR-TRMR 2K 10% TKF SIDE-AOJ 1-TRN	03744	3386X-Y46-202
A1A2R121	698-3153		1	RESISTOR 3.83K 1% .125W TF TC=0+-100	00746	CRB14 OR CRB25
A1A2R122	698-3155		1	RESISTOR 4.64K 1% .125W TF TC=0+-100	00746	CRB14 OR CR825
A1A2R123	757-1094		1	RESISTOR 1.47K +-1% .125W TF TC=0+-100	00746	CR814 OR CRB25
A1A2R124	698-0084		1	RESISTOR 2.15K 1% .125W TF TC=0+-100	00746	CR814 OR CRB25

**Indicates factory-selected value*

HP Part Number 85662-60236

A1A2 XYZ Driver Amplifier

Reference Designation	HP Part Number	C D	Qty	Description	Mfr Code	Mfr Part Number
A1A2R125	0698-0084	9	1	RESISTOR 2.15K 1% .125W TF TC=0+-100	00746	CR814 OR CR825
A1A2R126	0757-0440	7	1	RESISTOR 7.5K +-1% .125W TF TC=0+-100	00746	CR814 OR CRB25
A1A2R127	2100-3353	8	1	RESISTOR-TRMR 20K 10% TKF SIDE-ADJ 1-TRN	03744	3386X-146-203
A1A2R128	0757-0444	1	1	RESISTOR 12.1K +-1% .125W TF TC=0+-100	00746	CRB14 OR CRB25
A1A2R129	0757-0428	1	1	RESISTOR 1.62K +-1% .125W TF TC=0+-100	00746	CRB14 OR CRB25
A1A2R130	0757-0428	1	1	RESISTOR 1.62K +-1% .125W TF TC=0+-100	00746	CR814 OR CRB25
A1A2R131	0757-0394	C	1	RESISTOR 51.1 +-1% .125W TF TC=0+-100	00746	CRB14 OR CRB25
A1A2R132	0698-3150	8	1	RESISTOR 2.371: 1% .125W TF TC=0+-100	00746	CR814 OR CRB25
A1A2R133	0698-3150	8	1	RESISTOR 2.371: 1% .125W TF TC=0+-100	00746	CRB14 OR CRB25
A1A2R134	0698-3155	1	1	RESISTOR 4.641: 1% .125W TF TC=0+-100	00746	CRB14 OR CR825
A1A2R135	0757-0394	C	1	RESISTOR 51.1 +-1% .125W TF TC=0+-100	00746	CR814 OR CRB25
A1A2R136	0757-0438	3	1	RESISTOR 5.11K +-1% .125W TF TC=0+-100	00746	CRB14 OR CRB25
A1A2R137	0698-3153	9	1	RESISTOR 3.831: 1% .125W TF TC=0+-100	00746	CRB14 OR CRB25
A1A2R138	0698-0084	9	1	RESISTOR 2.15K 1% .125W TF TC=0+-100	00746	CR814 OR CRB25
A1A2R139	0698-0084	9	1	RESISTOR 2.15K 1% .125W TF TC=0+-100	00746	CRB14 OR CR825
A1A2R140	3757-0401	0	1	RESISTOR 100 +-1% .125W TF TC=0+-100	00746	CR814 OR CRB25
A1A2R141	0757-0401	0	1	RESISTOR 100 +-1% .125W TF TC=0+-100	00746	CR814 OR CRB25
A1A2R142	3757-0394	0	1	RESISTOR 51.1 +-1% .125W TF TC=0+-100	00746	CR814 OR CR825
A1A2R143	0757-0401	0	1	RESISTOR 100 +-1% .125W TF TC=0+-100	00746	CR814 OR CRB25
A1A2R144	0757-0401	0	1	RESISTOR 100 +-1% .125W TF TC=0+-100	00746	CRB14 OR CRB25
A1A2R145	1757-0401	0	1	RESISTOR 100 +-1% .125W TF TC=0+-100	00746	CR814 OR CR625
A1A2R146	1757-0401	0	1	RESISTOR 100 +-1% .125W TF TC=0+-100	00746	CR814 OR CRB25
A1A2R201	1757-0873	0	1	RESISTOR 1.62K +-1% .5W TF TC=0+-100	01074	H2
A1A2R202	1757-0438	3	1	RESISTOR 5.11K +-1% .125W TF TC=0+-100	00746	CR814 OR CR825
A1A2R203	1757-0346	2	1	RESISTOR 10 +-1% .125W TF TC=0+-100	00746	CR814 OR CR825
A1A2R204	0757-0851	4	1	RESISTOR 43.21: +-1% .5W TF TC=0+-100	01074	H2
A1A2R205	0757-0439	4	1	RESISTOR 6.81K +-1% .125W TF TC=0+-100	00746	CRB14 OR CRB25
A1A2R206	0698-3417	8	1	RESISTOR 23.71: 1% .5W TF TC=0+-100	01074	H2
A1A2R207	0757-0346	2	1	RESISTOR 10 +-1% .125W TF TC=0+-100	00746	CR814 OR CR825
A1A2R208	0757-0460	1	1	RESISTOR 61.9K +-1% .125W TF TC=0+-100	00746	CR814 OR CRB25
A1A2R209	0757-0873	0	1	RESISTOR 1.62K +-1% .5W TF TC=0+-100	01074	H2
A1A2R210	0757-0438	3	1	RESISTOR 5.11K +-1% .125W TF TC=0+-100	00746	CRB14 OR CRB25
A1A2R211	0757-0346	2	1	RESISTOR 10 +-1% .125W TF TC=0+-100	00746	CRf314 OR CR825
A1A2R212	1757-0851	4	1	RESISTOR 43.21: +-1% .5W TF TC=0+-100	01074	H2
A1A2R213	1757-0439	4	1	RESISTOR 6.81K +-1% .125W TF TC=0+-100	00746	CR814 OR CRB25
A1A2R214	0698-3417	8	1	RESISTOR 23.7K 1% .5W TF TC=0+-100	01074	H2
A1A2R215	0757-0346	2	1	RESISTOR 10 +-1% .125W TF TC=0+-100	00746	CR814 OR CRB25
A1A2R216	1757-0460	1	1	RESISTOR 61.9K +-1% .125W TF TC=0+-100	00746	CRB14 OR CRB25
A1A2R217	2100-3273	1	1	RESISTOR-TRMR 2K 10% TKF SIDE-ADJ 1-TRN	03744	3386X-Y46-202
A1A2R218	1698-3153	3	1	RESISTOR 3.83K 1% .125W TF TC=0+-100	00746	CR814 OR CRB25
A1A2R219	0757-0419	3	1	RESISTOR 681 +-1% .125W TF TC=0+-100	00746	CR814 OR CRB25
A1A2R220	2100-3273	1	1	RESISTOR-TRMR 2K 10% TKF SIDE-ADJ 1-TRN	03744	3386X-Y46-202
A1A2R221	1698-3153	3	1	RESISTOR 3.83K 1% .125W TF TC=0+-100	00746	CR814 OR CR825
A1A2R222	0698-3155	1	1	RESISTOR 4.64K 1% .125W TF TC=0+-100	00746	CR814 OR CRB25
A1A2R223	0757-1094	9	1	RESISTOR 1.47K +-1% .125W TF TC=0+-100	00746	CRB14 OR CRB25
A1A2R224	0698-0084	3	1	RESISTOR 2.15K 1% .125W TF TC=0+-100	00746	CR814 OR CRB25
A1A2R225	0698-0084	9	1	RESISTOR 2.15K 1% .125W TF TC=0+-100	00746	CR814 OR CR825

**Indicates factory-selected value*

HP Part Number 85662-60236
A1A2 XYZ Driver Amplifier

Reference Designatior	HP Part Number	CD	Qty	Description	Mfr Code	Mfr Part Number
A1A2R226	0757-0440		1	RESISTOR 7.5K +-1% .125W TF TC=0+-100	0074(	CRB14 OR CRB25
A1A2R227	2100-3353		1	RESISTOR-TRMR 20K 10% TKF SIDE-ADJ 1-TRN	0374(	3386X-Y46-203
A1A2R228	0757-0444		1	RESISTOR 12.1K +-1% .125W TF TC=0+-100	0074(	CRB14 OR CRB25
A1A2R229	0757-0428		1	RESISTOR 1.62K +-1% .125W TF TC=0+-100	0074(	CRB14 OR CRB25
A1A2R230	0757-0428		1	RESISTOR 1.62K +-1% .125W TF TC=0+-100	0074f	CR814 OR CR825
A1A2R231	0757-0394	(	1	RESISTOR 51.1 +-1% .125W TF TC=0+-100	00741	CRB14 OR CRB25
A1A2R232	0698-3150	(	1	RESISTOR 2.37K 1% .125W TF TC=0+-100	00741	CRB14 OR CR825
A1A2R233	0698-3150	(	1	RESISTOR 2.371: 1% .125W TF TC=0+-100	0074E	CRB14 OR CRB25
A1A2R234	0698-3155	.	1	RESISTOR 4.641: 1% .125W TF TC=0+-100	0074E	CR814 OR CRB25
A1A2R235	0757-0394	(	1	RESISTOR 51.1 +-1% .125W TF TC=0+-100	0074E	CR814 OR CR825
A1A2R236	0757-0438	3	1	RESISTOR 5.11K +-1% .125W TF TC=0+-100	0074E	CRB14 OR CR825
A1A2R237	0698-3153	9	1	RESISTOR 3.83K 1% .125W TF TC=0+-100	0074E	CRB14 OR CR825
A1A2R238	0698-0084	(	1	RESISTOR 2.15K 1% .125W TF TC=0+-100	0074E	CR814 OR CRB25
A1A2R239	0698-0084	(	1	RESISTOR 2.15K 1% .125W TF TC=0+-100	0074E	CRB14 OR CRB25
A1A2R240	0757-0401	(	1	RESISTOR 100 +-1% .125W TF TC=0+-100	00746	CR814 OR CRB25
A1A2R241	0757-0401	(	1	RESISTOR 100 +-1% .125W TF TC=0+-100	00746	CRB14 OR CRB25
A1A2R242	0757-0394	(	1	RESISTOR 51.1 +-1% .125W TF TC=0+-100	00746	CR814 OR CR825
A1A2R243	0757-0401	(	1	RESISTOR 100 +-1% .125W TF TC=0+-100	00746	CR814 OR CRB25
A1A2R244	0757-0401	(	1	RESISTOR 100 +-1% .125W TF TC=0+-100	00746	CR814 OR CRB25
A1A2R245	0757-0401	(	1	RESISTOR 100 +-1% .125W TF TC=0+-100	00746	CR814 OR CR825
A1A2R246	0757-0401	(	1	RESISTOR 100 +-1% .125W TF TC=0+-100	00746	CRB14 OR CRB25
A1A2R301	0757-0819	4	1	RESISTOR 909 +-1% .5W TF TC=0+-100	01074	H2
A1A2R302	3698-3151	7	1	RESISTOR 2.871: 1% .125W TF TC=0+-100	00746	CRB14 OR CRB25
A1A2R303	0757-0394	(	1	RESISTOR 51.1 +-1% .125W TF TC=0+-100	00746	CRB14 OR CR825
A1A2R304	3757-0394	(	1	RESISTOR 51.1 +-1% .125W TF TC=0+-100	00746	CRB14 OR CRB25
A1A2R305	3698-3416	7	1	RESISTOR 21.5K 1% .5W TF TC=0+-100	01074	H2
A1A2R306	3698-3414	5	1	RESISTOR 14.7K 1% .5W TF TC=0+-100	01074	H2
A1A2R307	1698-3152	3	1	RESISTOR 3.48K 1% .125W TF TC=0+-100	00746	CR814 OR CRB25
A1A2R308	2100-3207	L	1	RESISTOR-TRMR 5K 10% TKF SIDE-ADJ 1-TRN	03744	3386X-Y46-502
A1A2R309	0757-0428	L	1	RESISTOR 1.62K +-1% .125W TF TC=0+-100	00746	CR814 OR CRB25
A1A2R310	1757-0443	I	1	RESISTOR 11K +-1% .125W TF TC=0+-100	00746	CR814 OR CRB25
A1A2R311	0757-0441	3	1	RESISTOR 8.25K +-1% .125W TF TC=0+-100	00746	CR814 OR CRB25
A1A2R312	0698-0085	)	1	RESISTOR 2.61K 1% .125W TF TC=0+-100	00746	CRB14 OR CR825
A1A2R313	1757-0346	.	1	RESISTOR 10 +-1% .125W TF TC=0+-100	00746	CR814 OR CRB25
A1A2R314	0757-0443	)	1	RESISTOR 11K +-1% .125W TF TC=0+-100	00746	CRB14 OR CR825
A1A2R315	0757-0280	3	1	RESISTOR 1K +-1% .125W TF TC=0+-100	00746	CR814 OR CR825
A1A2R316	0757-0444	L	1	RESISTOR 12.1K +-1% .125W TF TC=0+-100	00746	CR814 OR CRB25
A1A2R317	1757-0466	'	1	RESISTOR 110K +-1% .125W TF TC=0+-100	00746	CRB14 OR CR825
A1A2R318	1698-3155		1	RESISTOR 4.64K 1% .125W TF TC=0+-100	00746	CR814 OR CRB25
A1A2R319	1100-3207		1	RESISTOR-TRMR 5K 10% TKF SIDE-AOJ 1-TRN	03744	3386X-146-502
A1A2R320	0757-0394	(	1	RESISTOR 51.1 +-1% .125W TF TC=0+-100	00746	CRB14 OR CR825
A1A2R325	0757-0394	(	1	RESISTOR 51.1 +-1% .125W TF TC=0+-100	00746	CR814 OR CR825
A1A2R327	0757-0394	"	1	RESISTOR 51.1 +-1% .125W TF TC=0+-100	00746	CR814 OR CRB25
A1A2R328	3159-0005		1	RESISTOR-ZERO OHMS 22 AWG LEAD DIA	01339	L-2007-1
A1A2R329	0757-0288		1	RESISTOR 9.09K +-1% .125W TF TC=0+-100	00746	CRB14 OR CR825
A1A2R401	0757-0819	4	1	RESISTOR 909 +-1% .5W TF TC=0+-100	01074	H2
A1A2R402	0698-3151		1	RESISTOR 2.871: 1% .125W TF TC=0+-100	00746	CRB14 OR CRB25
A1A2R403	1757-0394		1	RESISTOR 51.1 +-1% .125W TF TC=0+-100	00746	CRB14 OR CR825

**Indicates facto y-selected value*

HP Part Number 85662-60236
A1A2 XYZ Driver Amplifier

Reference Designation	HP Part Number	C D	Qty	Description	Mfr Code	Mfr Part Number
A1A2R404	0757-0394	0	1	RESISTOR 51.1 +-1% .125W TF TC=0+-100	00746	CRB14 OR CR825
A1A2R405	0698-3416	7	1	RESISTOR 21.5K 1% .5W TF TC=0+-100	01074	H2
A1A2R406	0757-0841	2	1	RESISTOR 12.1K +-1% .5W TF TC=0+-100	01074	H2
A1A2R407	0698-3152	8	1	RESISTOR 3.48K 1% .125W TF TC=0+-100	00746	CRB14 OR CR825
A1A2R408	0757-0280	3	1	RESISTOR 1K +-1% .125W TF TC=0+-100	00746	CR814 OR CRB25
A1A2R409	2100-3207	1	1	RESISTOR-TRMR 5K 10% TKF SIDE-ADJ 1-TRN	03744	3386X-Y46-502
A1A2R410	0698-0084	9	1	RESISTOR 2.15K 1% .125W TF TC=0+-100	00746	CRB14 OR CR825
A1A2R411	0698-3154	0	1	RESISTOR 4.221: 1% .125W TF TC=0+-100	00746	CR814 OR CRB25
A1A2R412	0757-0416	7	1	RESISTOR 511 +-1% .125W TF TC=0+-100	00746	CRB14 OR CR825
A1A2R413	0757-0465	6	1	RESISTOR 100K +-1% .125W TF TC=0+-100	00746	CR814 OR CRB25
A1A2R415	0757-0459	8	1	RESISTOR 56.21: +-1% .125W TF TC=0+-100	00746	CR814 OR CR825
A1A2R416	0698-0084	9	1	RESISTOR 2.15K 1% .125W TF TC=0+-100	00746	CRB14 OR CRB25
A1A2R417	0698-6322	0	1	RESISTOR 4K +-0.1% .125W TF TC=0+-25	00746	CR814 OR CR825
A1A2R418	0698-6322	0	1	RESISTOR 4K +-0.1% .125W TF TC=0+-25	00746	CR814 OR CRB25
A1A2R419	0698-6322	0	1	RESISTOR 4K +-0.1% .125W TF TC=0+-25	00746	CRB14 OR CRB25
A1A2R420	0698-6322	0	1	RESISTOR 4K +-0.1% .125W TF TC=0+-25	00746	CRB14 OR CRB25
A1A2R421	0698-6624	5	1	RESISTOR 2K +-0.1% .125W TF TC=0+-25	00746	CR814 OR CR825
A1A2R423	0757-0199	3	1	RESISTOR 21.5K +-1% .125W TF TC=0+-100	00746	CRB14 OR CRB25
A1A2R424	0698-3154	0	1	RESISTOR 4.221: 1% .125W TF TC=0+-100	00746	CR814 OR CRB25
A1A2R425	0757-0444	1	1	RESISTOR 12.1K +-1% .125W TF TC=0+-100	00746	CRB14 OR CR825
A1A2R426	2100-3273	1	1	RESISTOR-TRMR 2K 10% TKF SIDE-AOJ 1-TRN	03744	3386X-146-202
A1A2R427	2100-3273	1	1	RESISTOR-TRMR 2K 10% TKF SIDE-ADJ 1-TRN	03744	3386X-Y46-202
A1A2R429	0698-6322	0	1	RESISTOR 4K +-0.1% .125W TF TC=0+-25	00746	CR814 OR CR825
A1A2R430	0698-6322	0	1	RESISTOR 4K +-0.1% .125W TF TC=0+-25	00746	CR814 OR CRB25
A1A2R431	0698-6322	0	1	RESISTOR 4K +-0.1% .125W TF TC=0+-25	00746	CRB14 OR CRB25
A1A2R432	0698-6322	0	1	RESISTOR 4K +-0.1% .125W TF TC=0+-25	00746	CRB14 OR CR825
A1A2R433	0698-6624	5	1	RESISTOR 2K +-0.1% .125W TF TC=0+-25	00746	CR814 OR CRB25
A1A2R435	0757-0199	3	1	RESISTOR 21.5K +-1% .125W TF TC=0+-100	00746	CRB14 OR CRB25
A1A2R436	0698-3154	0	1	RESISTOR 4.221: 1% .125W TF TC=0+-100	00746	CR814 OR CRB25
A1A2R437	2100-3273	1	1	RESISTOR-TRMR 2K 10% TKF SIDE-ADJ 1-TRN	03744	3386X-Y46-202
A1A2R438	0757-0444	1	1	RESISTOR 12.11: +-1% .125W TF TC=0+-100	00746	CRB14 OR CR825
A1A2R440	2100-3273	1	1	RESISTOR-TRMR 2K 10% TKF SIDE-ADJ 1-TRN	03744	3386X-146-202
A1A2R443	0757-0279	0	1	RESISTOR 3.16K +-1% .125W TF TC=0+-100	00746	CR814 OR CRB25
A1A2R445	0757-0401	0	1	RESISTOR 100 +-1% .125W TF TC=0+-100	00746	CRB14 OR CR825
A1A2R512	2100-3353	8	1	RESISTOR-TRMR 20K 10% TKF SIDE-ADJ 1-TRN	03744	3386X-146-203
A1A2R513	2100-3355	0	1	RESISTOR-TRMR 100K 10% TKF SIDE-ADJ 1-TR	03744	3386X-Y46-104
A1A2R514	0757-0199	3	1	RESISTOR 21.5K +-1% .125W TF TC=0+-100	00746	CRB14 OR CR825
A1A2R515	0757-0280	3	1	RESISTOR 1K +-1% .125W TF TC=0+-100	00746	CR814 OR CR825
A1A2R516	2100-3354	9	1	RESISTOR-TRMR 50K 10% TKF SIDE-AOJ 1-TRN	03744	3386X-Y46-503
A1A2R517	2100-3354	9	1	RESISTOR-TRMR 50K 10% TKF SIDE-ADJ 1-TRN	03744	3386X-Y46-503
A1A2R518	0698-0084	9	1	RESISTOR 2.15K 1% .125W TF TC=0+-100	00746	CR814 OR CRB25
A1A2TP104	0360-0535	0	1	TERMINAL-TEST POINT .330IN ABOVE	04055	
A1A2TP105	0360-0535	0	1	TERMINAL-TEST POINT .330IN ABOVE	04055	
A1A2TP106	0360-0535	0	1	TERMINAL-TEST POINT .330IN ABOVE	04055	
A1A2TP204	0360-0535	0	1	TERMINAL-TEST POINT .330IN ABOVE	04055	
A1A2TP205	0360-0535	0	1	TERMINAL-TEST POINT .330IN ABOVE	04055	
A1A2TP301	0360-0535	0	1	TERMINAL-TEST POINT .330IN ABOVE	04055	

**Indicates factory-selected value*

HP Part Number 85662-60236
A1A2 XYZ Driver Amplifier

Reference Designation	HP Part Number	CD	Qty	Description	Mfr Code	Mfr Part Number
A1A2TP401	1360-0535	0	1	TERMINAL-TEST POINT .330IN ABOVE	04055	
A1A2TP501	)360-0535	0	1	TERMINAL-TEST POINT .330IN ABOVE	04055	
A1A2U101	1826-1796	6	1	IC OP AMP H-SLEW-RATE DUAL 8-DIP-P PKG	02037	MC34082P
A1A2U201	1826-1796	6	1	IC OP AMP H-SLEW-RATE DUAL 8-DIP-P PKG	02037	MC34082P
A1A2U401	1826-1422	5	1	IC OP AMP WB QUAD 14-DIP-P PKG	02037	MC34084P
A1A2U402	.826-1422	5	1	IC OP AMP WB QUAD 14-DIP-P PKG	02037	MC34084P
A1A2VR501	1902-1422	7	1	DIODE-ZNR 56V 5% DO-35 PD=.4W TC=+.116%	02037	
A1A2VR502	.902-1422	7	1	DIODE-ZNR 56V 5% DO-35 PD=.4W TC=+.116%	02037	

Analyzer Repair Inc.

**Indicates factory-selected value*

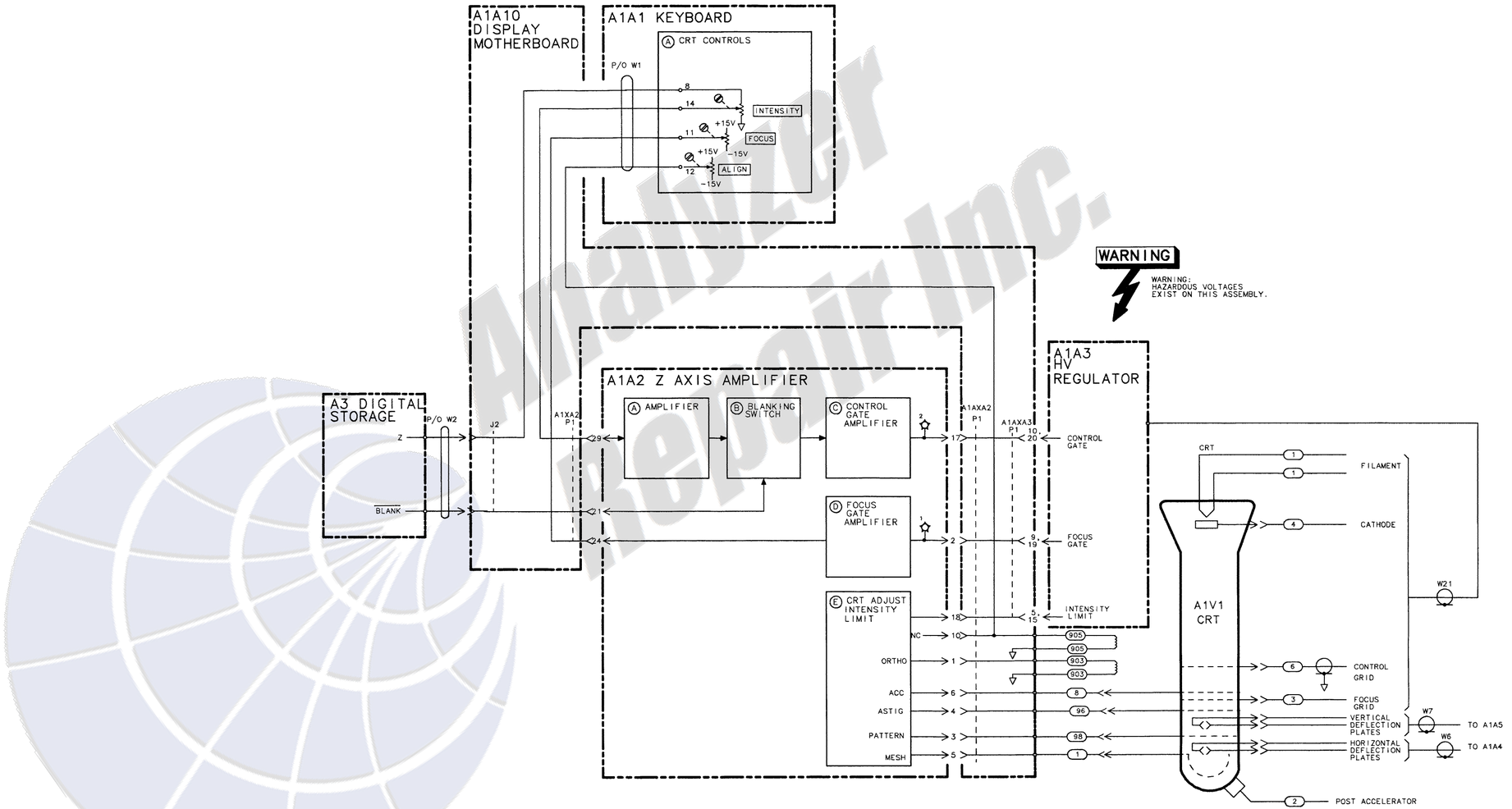

A1A2 Z-AXIS AMPLIFIER (SERIAL PREFIXES:2430A-3001A), BLOCK DIAGRAM

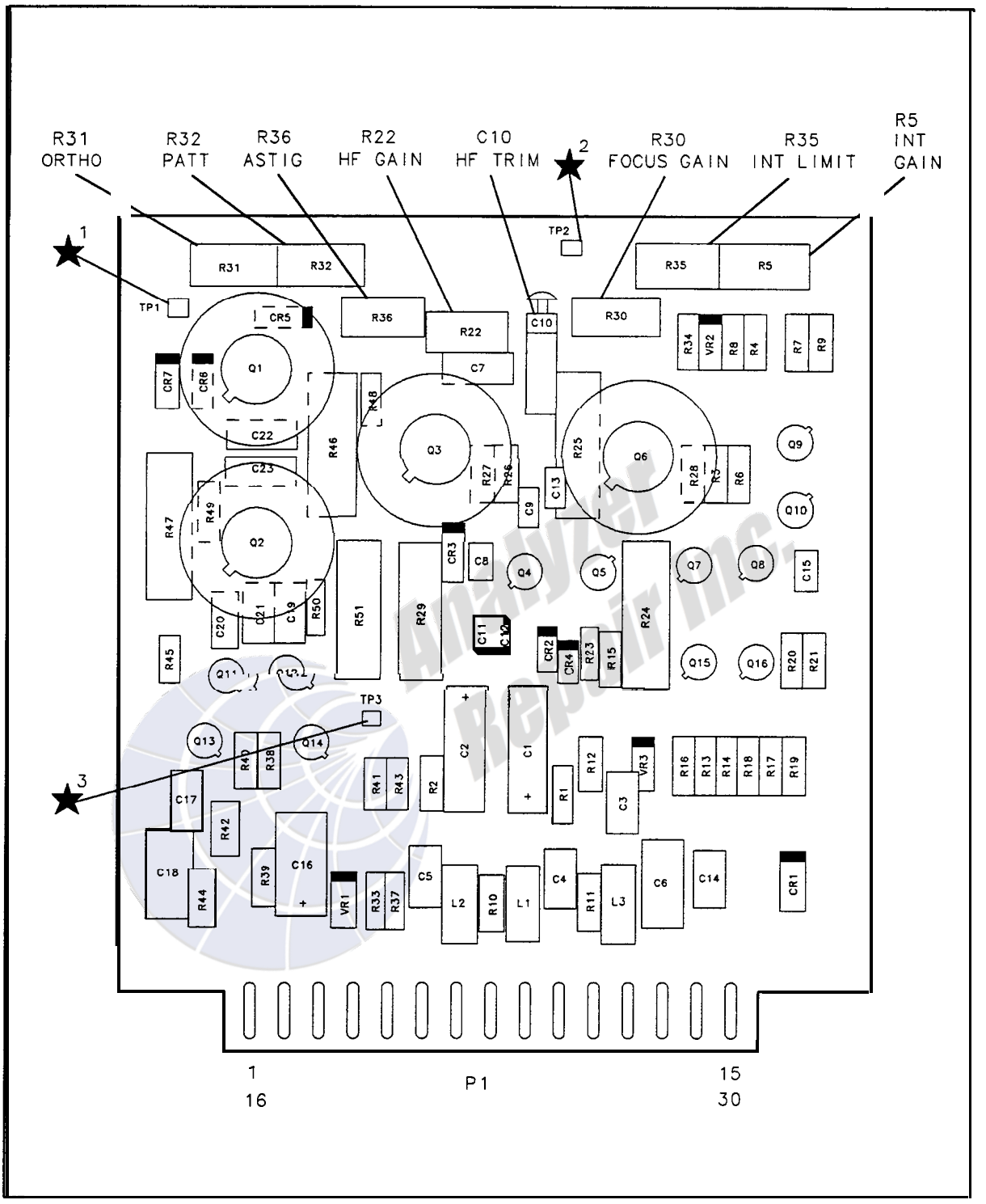

A1A2 Z Axis Amplifier Component Locations, 85662-60100

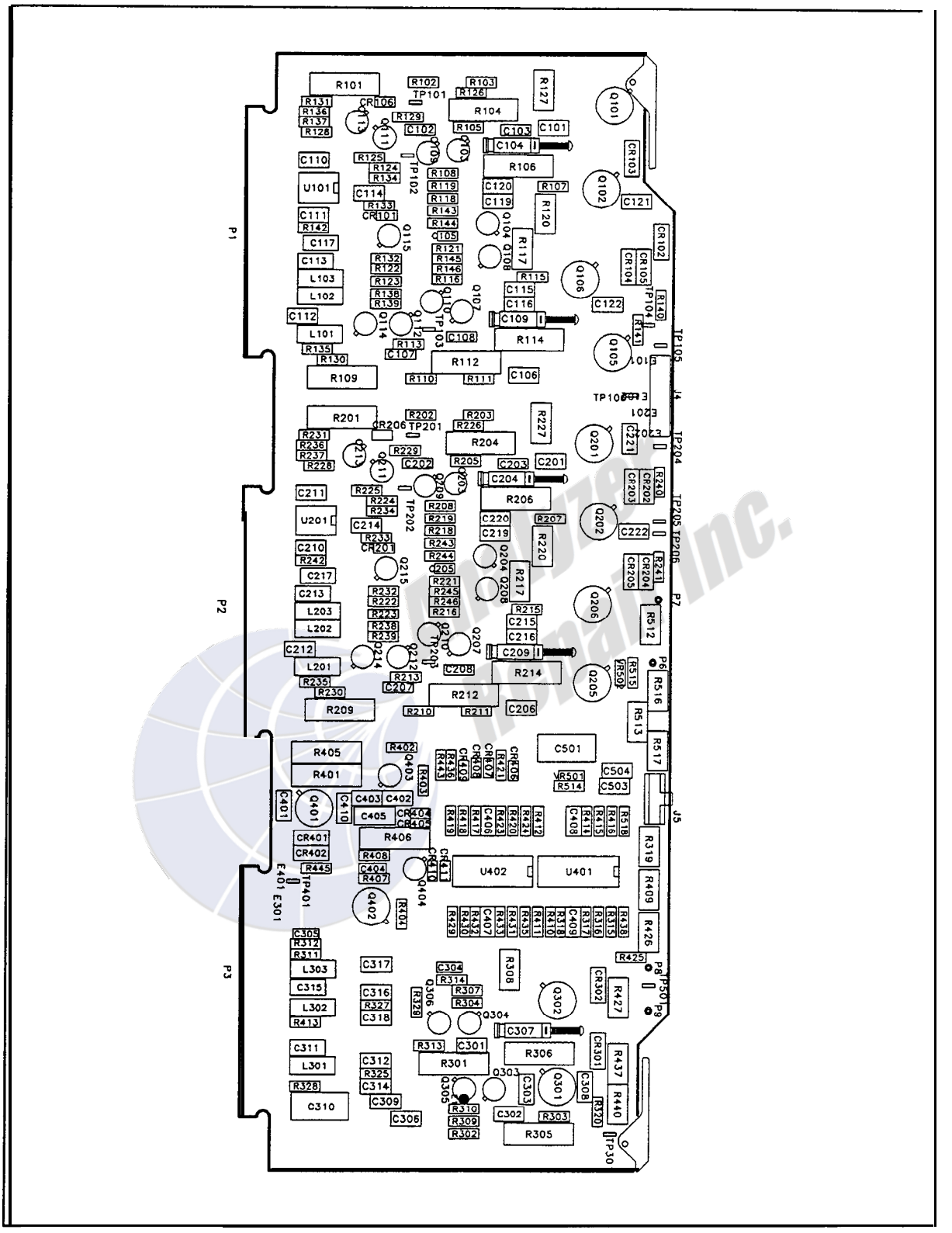

A1A2 XYZ **Driver Amplifier Component Locations, 85662-60236**

A1A2 Z AXIS AMPLIFIER
85662-60100
(SERIAL PREFIXES: 2403A-3001A)

P1

PIN	SIGNAL	TO/FROM	FUNCTION BLOCK
1	ORTHO	A1V1	E
16	GND		F
2	FOCUS GATE	A1A3	D
17	CONTROL GATE	A1A3	C
3	PATTERN INTENSITY LIMIT	A1V1 A1A3	E E
4	ASTIG	A1V1	E
19	GND		F
5	MESH	A1V1	E
20	GND		NC
6	ACC	A1V1	E
21	LBLANK	A3A2	B
7	-15V	A1A6	F
22	NC		
8	GND		F
23	GND		NC
9	+15V	A1A6	F
24	FOCUS	A1A1	D
10	TRACE ALIGN	A1A1W1-12	NC
25	NC		
11	GND		F
26	GND		NC
12	+100V	A1A7	F
27	GND		NC
13	GND		F
28	GND		F
14	GND		NC
29	Z-AXIS	A1A1R1	A
15	GND		F
30	GND		F

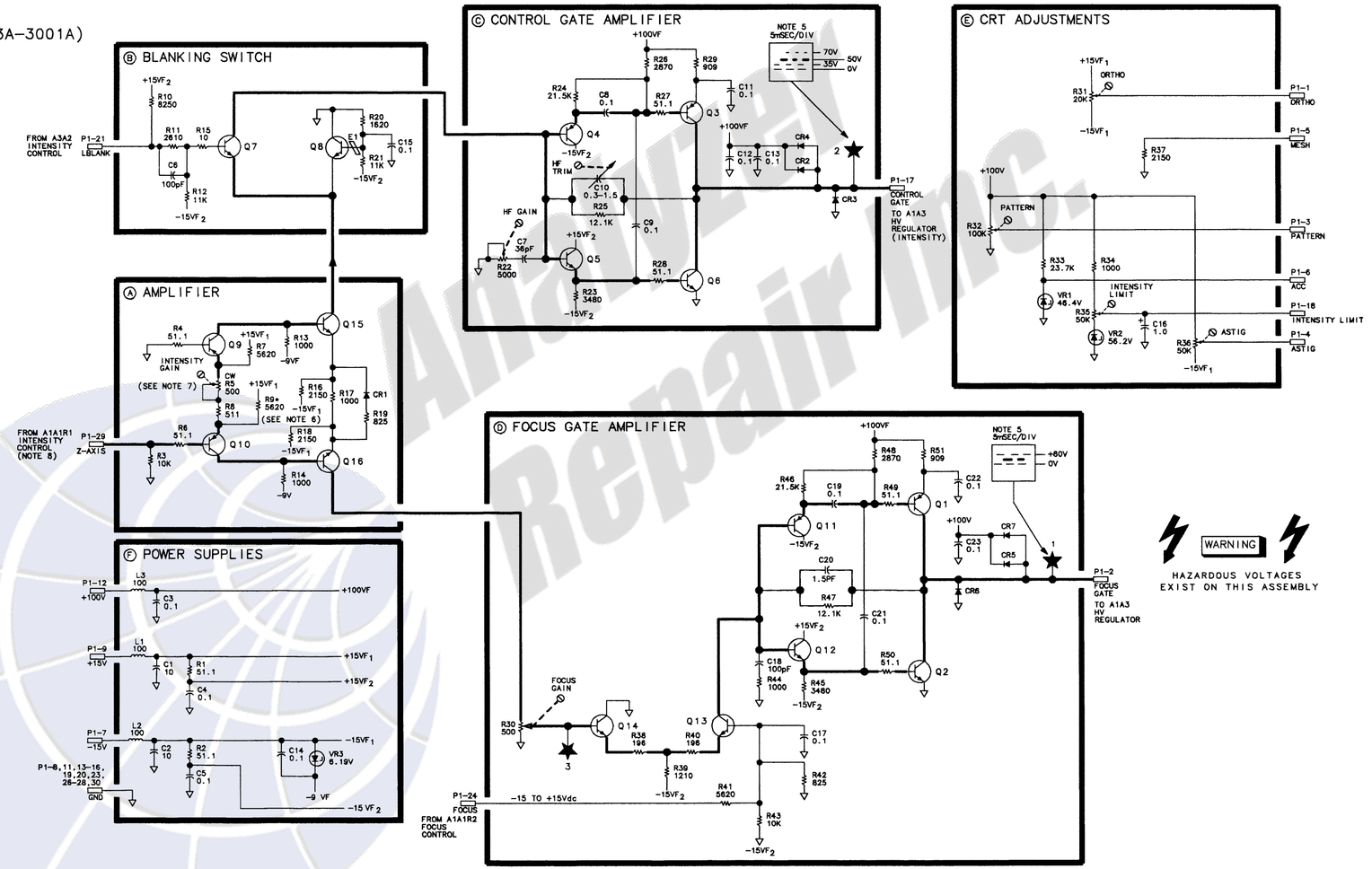

NOTES:

1. REFERENCE DESIGNATORS WITHIN THIS ASSEMBLY ARE ABBREVIATED. FOR COMPLETE REFERENCE DESIGNATION,PREFIX ABBREVIATION WITH ASSEMBLY DESIGNATION.
2. UNLESS OTHERWISE INDICATED: RESISTANCE IS IN OHMS (Ω) CAPACITANCE IS IN MICROFARADS(μF) INDUCTANCE IS IN MICROHENRIES(μH)
3. UNLESS OTHERWISE INDICATED: SIGNALS ENTER AT LEFT SIDE OR TOP AND EXIT AT RIGHT SIDE OR BOTTOM OF FUNCTION BLOCKS.
4. MNEMONIC TABLE:

MNEMONIC	DESCRIPTION
ORTHO	ORTHOGONAL
ACC	ACCELERATOR
ASTIG	ASTIGMATISM
Z	UNSCALED INTENSITY SIGNAL
LBLANK	(LOW: CRT BEAM BLANKED)
Z-AXIS	INTENSITY SIGNAL (SCALED BY A1A1R1 INTENSITY CONTROL)
ICLK	INDICATOR CLOCK (FRONT PANEL LEDS)

5. TEST POINT WAVEFORM ASSUMES INSTRUMENT PRESET CONDITION. ACTUAL AMPLITUDE OF SIGNAL IS DETERMINED BY SETTING OF A1A1R1 INTENSITY CONTROL.
6. A1A2R9* IS A FACTORY-SELECTED COMPONENT. ACCEPTABLE VALUES RANGE FROM 2.87kΩ TO 6.19kΩ.
7. A1A2R5 IS NORMALLY SET FULLY CLOCKWISE FOR MAXIMUM CIRCUIT GAIN.
8. Z-AXIS SIGNAL IS Z SIGNAL FROM A3A2P1-3 (ROUTED TO A3A10, W2, A1A10, A1A1W1, A1A1 A1A1W1, A1A10, A1A2), SCALED BY A1A1R1 INTENSITY CONTROL.

Analyst Repair Inc.

A1A2 XYZ DRIVER AMPLIFIER (SHEET 1 OF 2)
85662-60236
(SERIAL PREFIXES: 3004A AND ABOVE)

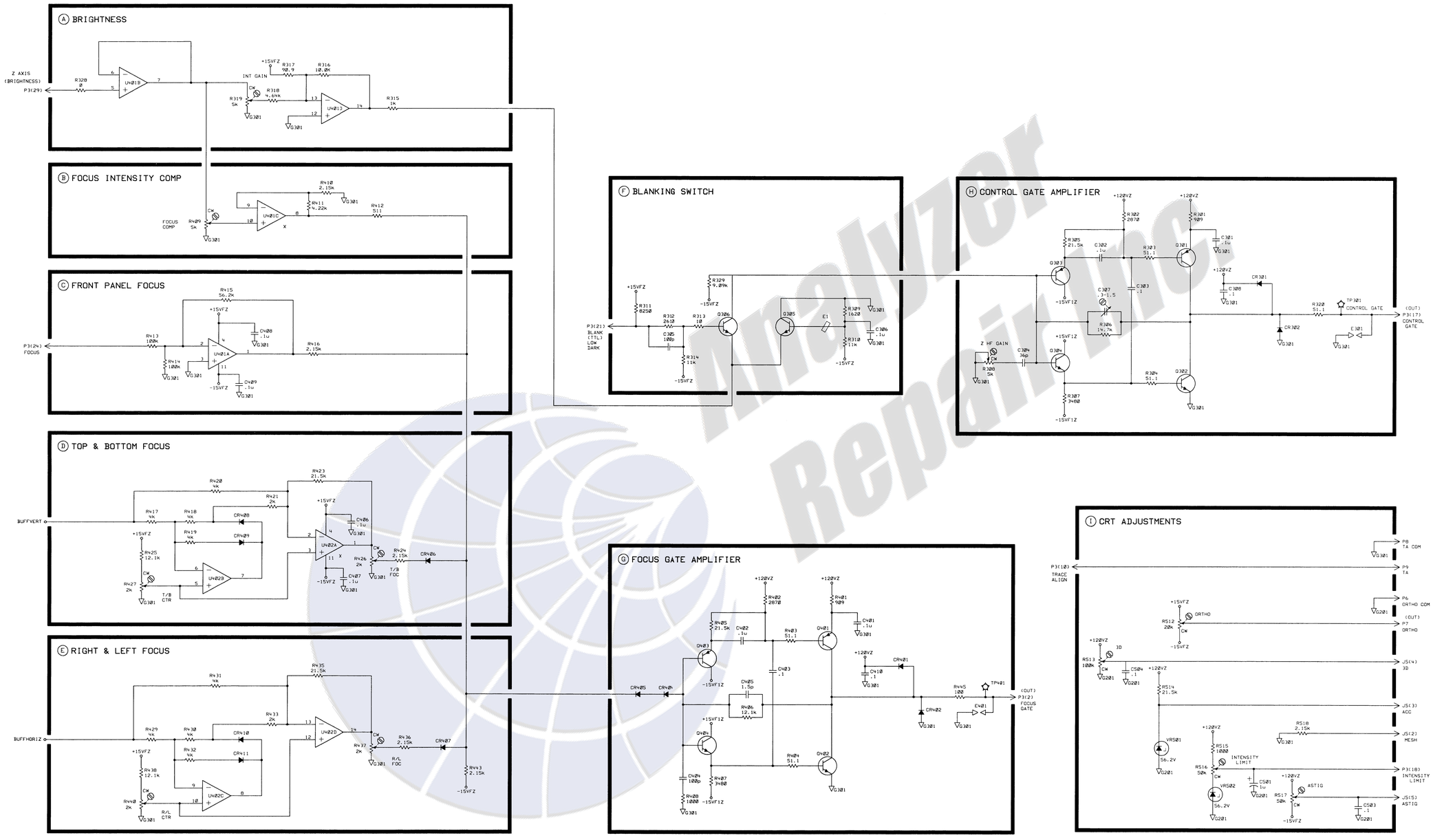

NOTES:

1. REFERENCE DESIGNATORS WITHIN THIS ASSEMBLY ARE ABBREVIATED. PREFIX ABBREVIATION WITH ASSEMBLY NUMBER FOR COMPLETE REFERENCE DESIGNATOR.

2. UNLESS OTHERWISE INDICATED: RESISTANCE IN OHMS(Ω). CAPACITANCE IN MICROFARADS (uF) INDUCTANCE IN MICROHENRIES (uH).

A1A2 XYZ DRIVER AMPLIFIER (SHEET 2OF 2)
85662-60236
(SERIAL PREFIXES: 3004A AND ABOVE)

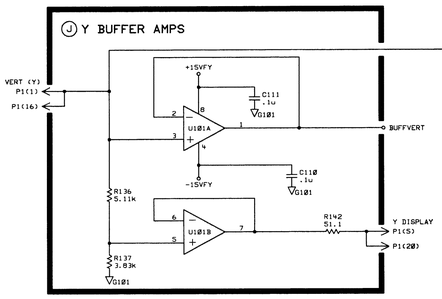

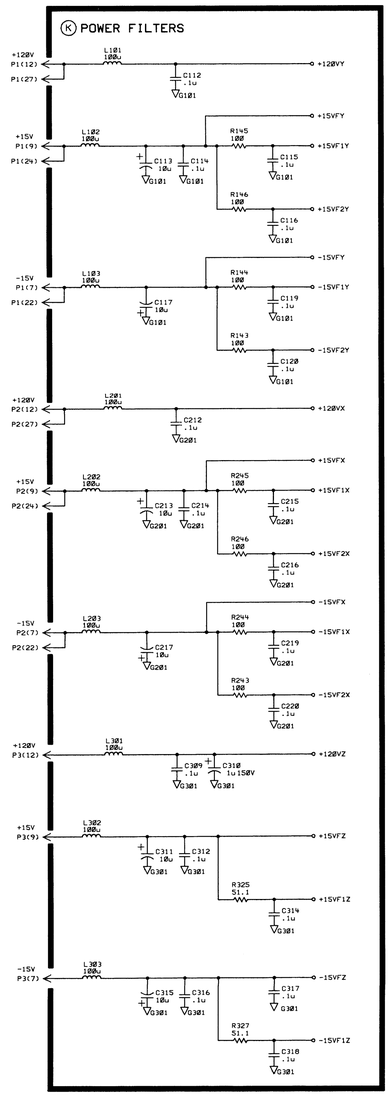

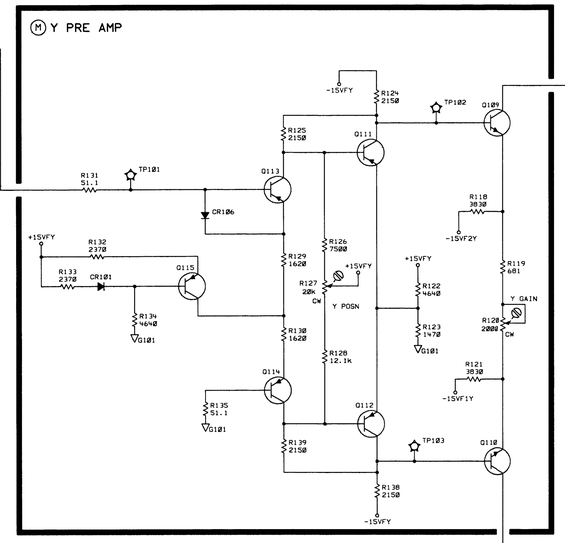

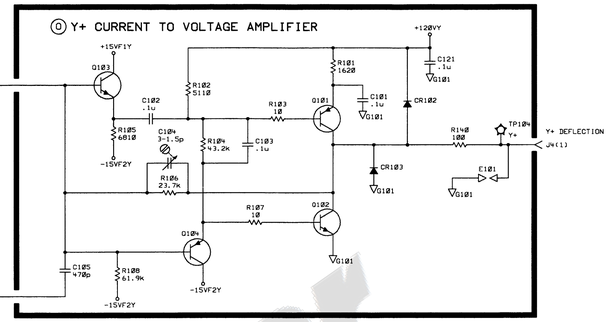

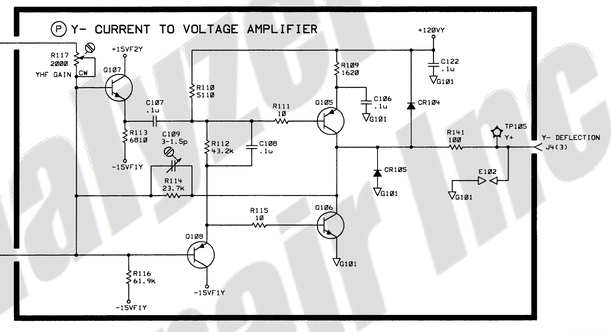

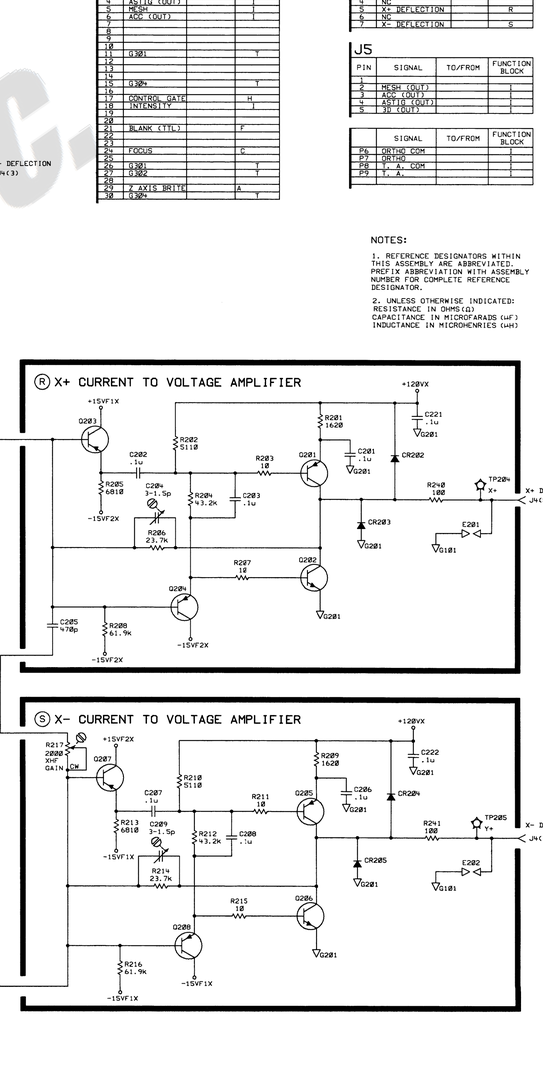

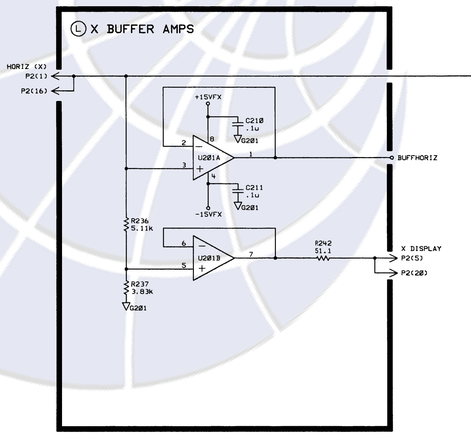

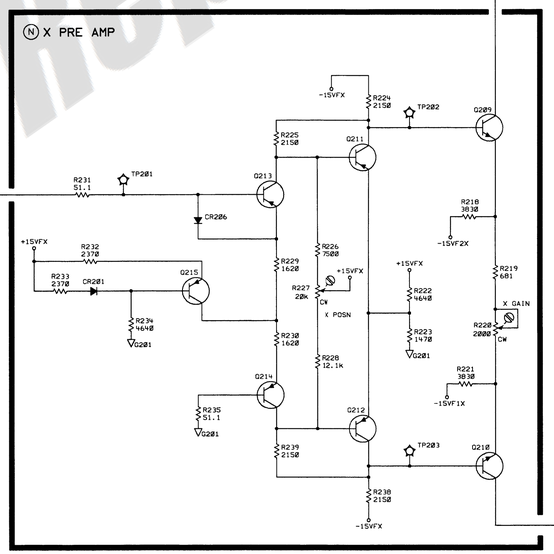

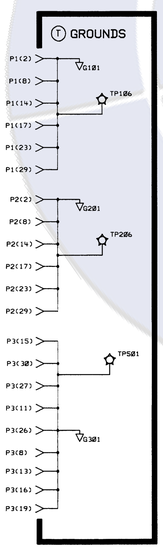

P1

PIN	SIGNAL	TO/FROM	FUNCTION BLOCK
1	VERT (Y)		J
2	G101		T
3			
4			
5	Y DISPLAY		J
6			
7			T
8	G102		
9			
10			
11			
12			
13			
14	G203		T
15			
16	VERT (Y)	J	
17	G101		T
18			
19			
20	X DISPLAY		J
21			
22			
23	G102		T
24			
25			
26			
27			
28			
29	G103		T
30			

P2

PIN	SIGNAL	TO/FROM	FUNCTION BLOCK
1	HORIZ (X)		L
2	G201		T
3			
4			
5	X DISPLAY		L
6			
7	-15V		K
8	G202		T
9	+15V		K
10			
11			
12	+120V		K
13			
14	G204		T
15			
16	HORIZ (X)		L
17	G201		T
18			
19			
20	X DISPLAY		L
21			
22	-15V		K
23	G202		T
24	+15V		K
25			
26			
27	+120V		K
28			
29	G303		T
30			

P3

PIN	SIGNAL	TO/FROM	FUNCTION BLOCK
1	ORTHO (OUT)		T
2	FOCUS GATE		G
3	BD (OUT)		I
4	ASTIG (OUT)		I
5	MESH		I
6	ACC (OUT)		I
7			
8			
9			
10			
11	G301		T
12			
13			
14			
15	G304		T
16			
17	CONTROL GATE		H
18	INTENSITY		I
19			
20			
21	BLANK (TTL)		F
22			
23			
24	FOCUS		C
25			
26	G301		T
27	G302		T
28			
29	Z AXIS (BRITE		A
30	G304		T

J4

PIN	SIGNAL	TO/FROM	FUNCTION BLOCK
1	Y- DEFLECTION		P
2	NC		
3	Y+ DEFLECTION		Q
4	NC		
5	X+ DEFLECTION		R
6	NC		
7	X- DEFLECTION		S

J5

PIN	SIGNAL	TO/FROM	FUNCTION BLOCK
1			
2	MESH (OUT)		I
3	ACC (OUT)		I
4	ASTIG (OUT)		I
5	BD (OUT)		I

	SIGNAL	TO/FROM	FUNCTION BLOCK
P6	ORTHO COM		I
P7	ORTHO		I
P8	T. A. COM		I
P9	T. A.		I

NOTES:

1. REFERENCE DESIGNATORS WITHIN THIS ASSEMBLY ARE ABBREVIATED. PREFIX ABBREVIATION WITH ASSEMBLY NUMBER FOR COMPLETE REFERENCE DESIGNATOR.

2. UNLESS OTHERWISE INDICATED: RESISTANCE IN OHMS(Ω) CAPACITANCE IN MICROFARADS (uF) INDUCTANCE IN MICROHENRIES (uH)

Analyzer Repair Inc.

A1A3

A1A3 High Voltage Regulator (85662-60059), Circuit Description (Serial Number Prefixes: 2403A-3001A)

Warning **The CRT filament potential is connected to the -4000 V dc cathode potential, which is dangerous to life.**

6

The post-accelerator potential of approximately +18 kV is supplied by High Voltage Multiplier A1A11. Refer to block diagram.

High-Voltage Transformer Ⓐ High-Voltage Rectifier and

Filter Ⓑ

The cathode of CRT A1V1 operates at -4000 V dc. This voltage is generated by rectifying an ac signal (approximately 30 kHz) on the secondary of High-Voltage Transformer T1. The primary side of T1 is an oscillator circuit located in A1A6 ±15 V Regulator. The rectifier circuit consists of CR1 and filter components Cl, R3, and C3. The CRT filament voltage of 4.45 V rms is generated by another secondary winding of T1 and is held at -4000 V dc by R1.

The cathode voltage is stabilized by a feedback control circuit consisting of R4, C4, and the amplifier circuit in A1A6 ±15 V Regulator in conjunction with a primary feedback winding on T1. Refer to the circuit description of A1A6. The cathode voltage is set by HV ADJ potentiometer A1A6R32 in the Oscillator Level Control circuit of A1A6.

Control Grid Level Shift Ⓒ

The control grid voltage is provided by generating a bias voltage with respect to the cathode voltage. This bias voltage is generated by a capacitively coupled, clipped sine-wave signal at the junction of C2 and C5. The sine wave is derived from the T1 secondary through R2. The upper clipping level is set by INTENSITY LIMIT adjustment A1A2R35 in A1A2 Z Axis Amplifier. The lower clipping level is set by the output of the Control Gate Amplifier in A1A2. The clipped sine-wave signal is coupled to the control grid circuit through C5, where it is rectified by CR3 and CR4 to generate a dc bias voltage across R7. C6, R10, and C7 constitute a filter to remove ripple from the bias voltage. C7 also allows fast pulse signals to be coupled directly to the control grid, to maintain response times of 30 ns or less.

Analyzer Repair Inc.

Focus Grid Charge Level Shift Ⓓ

The focus voltage is set by a resistive divider string from the cathode, with an intensity-focus correction bias developed in a manner similar to that of the control grid bias voltage described above. FOCUS LIMIT potentiometer R14 sets the focus grid to approximately -2500 V dc, and the focus bias is generated by a clipped sine wave at the junction of C9 and C10. This upper clipping level is set by VR2 (+82.5 V), and the lower clipping level is set by the FOCUS GATE voltage from A1A2.

Analyzer Repair Inc.

A1A3 High Voltage Regulator (85662-60233), Circuit Description (Serial Number Prefixes: 3004A and Above)

The High Voltage Regulator PC board couples the grid drive and focus control signals to their dc bias voltages to drive the CRT. It also provides mounting and interconnect for the A1A3A1 High Voltage Module to A1V1 CRT and the A1A6 High Voltage Power Supply drive and control circuitry.

Control Grid Level Shift Ⓐ

The filament voltage from the A1A3A1 High Voltage Module is connected to the CRT through this function block. The filament voltage is adjusted by adjusting the drive to the HV module so as to get 6.0 V ±0.05 V ac. TP1A and TP1B are provided to measure the filament voltage.

Warning **High Voltage. Test points TP1A and TP1B are at -2400 V dc.**



The cathode voltage is connected to one of the filament leads inside the A1A3A1 HV Module. Cl provides primary filtering of the cathode voltage while R1 and C3 provide a secondary stage of filtering. The filtered voltage is fed to the CRT through current sensing resistor, R26. The High Voltage Feedback is fed to the A1A6 High Voltage Power Supply regulator circuitry through R3 and C2.

The control grid modulates the beam current and thus the brightness of the CRT. The grid cutoff voltage of the CRT, the voltage that will turn the CRT off completely, is between -60 V and -90 V relative to the cathode. This dc offset on the grid is generated by capacitively coupling an ac signal onto the dc bias voltage and rectifying it into dc signal. The amplitude of the ac voltage is clamped to control the amount of dc signal that is added to the cathode voltage. The source of the ac voltage is a winding in the High Voltage Module that generates about 400 V p-p at 30 kHz. One side of this winding is grounded at J2-2 (COM). The other side connects to J2-3, HOT. It is capacitively coupled through Cl3 and current limited by R9. The amplitude of this signal is clamped between two dc levels, Intensity Limit and Control Gate.

Intensity Limit is an adjustable dc voltage (56 to 120 V dc) from A1A2 XYZ Driver Amplifier. Control Gate is the output of the Z Axis (brightness) amplifier on A1A2. The Control Gate signal is set to a dc level that represents the dark threshold level, the cutoff voltage. The currents are small enough that the voltage drops across R12 and R13 can be ignored. CR4 is biased so that if the voltage at TP3 tries to drop below 45 V, CR4 will conduct and hold the voltage at 45 V (A1A2 XYZ Driver Amplifier is designed so that the dark threshold is approximately 45 V). The anode of CR4 is at a voltage between 56 V and 120 V. VR1 adds 34.8 volts to the anode voltage of CR4 so that CR3 will conduct at somewhere between 90 V and 155 V. This determines the upper value of the ac voltage and sets the adjustable range of the peak-to-peak voltage of TP3 at between 45 V to 110 V. This ac voltage is coupled through C4 to the node between CR1 and CR2. As the ac voltage swings negative, current flows through R8 and CR2 to charge C5 to a negative voltage; as the ac voltage swings positive, CR1 is turned on and the node is held at the cathode voltage. This results in a process that charges C5 to a dc level more negative than the cathode voltage by the peak-to-peak amplitude of the adjustable ac voltage. Since the cutoff requirement is between -60 V and

-90 V, the adjustment range is adequate to change a 45 V Control Gate dark threshold signal into the desired cutoff voltage at the CRT grid.

To turn the CRT on, the grid voltage must be raised more positive toward the cathode from the cutoff voltage. The Control Gate signal, the analog of the desired CRT brightness, comes from the A1A2 XYZ Driver Amplifier board. The Control Gate signal has the correct relative-voltage amplitude to drive the grid but it has a 0 V to 110 V signal range and the grid is at -2400 V co (V cutoff). The 45 V dark threshold voltage can be translated to the CRT cutoff voltage by adjusting the INTENSITY LIMIT pot on the A1A2 board. In order for the beam to be turned on to the desired intensity, the grid voltage must be more positive. The CRT has a maximum drive voltage requirement of 55 V. Drive voltage is defined as the voltage, more positive than cutoff, that is required to bring the CRT to maximum allowable intensity. The A1A2 Z Axis Driver Amplifier gain is adjustable, giving approximately 60 V above the 45 V dark threshold (105 V total). This signal is coupled onto the grid signal two ways. If the instantaneous level of the control gate signal is raised, the peak-to-peak ac voltage at TP3 is reduced by an equal amount. This raises the grid voltage by the same amount that the ac voltage is reduced. The result is an Offset dc coupling of the Control Gate signal onto the grid. However, the response time is fairly slow, requiring several cycles of the 30 kHz ac signal to establish the dc level. This problem is solved by C6, which capacitively couples the Control Gate signal directly onto the grid signal. The result of these two coupling methods is that the fast edges are capacitively coupled and then the dc level is maintained with the Offset dc coupling. This circuit accurately follows the 40 ns rise- and fall-times of the Control Gate signal and also maintains dc level for the longest direct video vectors (10 ms).

Neon glow lamps, DS1 and DS2, act to limit the grid-to-cathode voltage to approximately 150 V. This prevents arcing inside the CRT if a circuit failure should occur and on power-down discharges of C5 and C6 as the cathode voltage drops. There are eleven spark gaps, El through Ell, that are designed in as part the PC board traces. These spark gaps are used to protect various low level signals against leakage or shorts in any of the capacitors that have high voltage across them.

Focus Grid Level Shift Ⓑ

The focus grid in the CRT needs to be approximately -1500 V dc to properly focus the beam. It is necessary to modify this voltage to correct for beam intensity and beam position.

The basic operation of the Focus Grid Level Shift is the same as Control Gate Level Shift Ⓐ with a few exceptions. The Focus Gate signal works just like the Control Gate signal, it uses the same ac and “Offset dc” coupling technique to couple the focus amplifier signal onto the focus grid. The basic level of the focus grid id determined by a resistive divider formed by R2, R14, and R15. R14 allows for the initial adjustment of the low brightness center screen focus voltage. This is the voltage that all corrections are added to. Instead of the Intensity Limit signal, the Focus Grid Level Shift circuit has a fixed dc level clamp voltage of 82 V set up by VR2.

This function block also serves as an interconnect for the +18 V dc and the DRIVE signal for the High Voltage Module from the A1A6 High Voltage board.

CRT Removal and Replacement (Serial Number Prefixes: 2403A-3001A)

Warning **This procedure should be performed by qualified personnel only. Voltages are present which, if contacted, could cause serious personal injury. Approximately -4000 V dc is present on the A1A3 High Voltage Regulator assembly even when the ac line cord is disconnected. The CRT can hold a +18 kV dc charge for several days if the post accelerator cable is not discharged.**

Warning **Do not handle the A1V1 CRT, the A1A3 High-Voltage Regulator Assembly or Al Al 1 High-Voltage Multiplier until the following high-voltage discharge procedure has been performed.**

Removal Procedures

1. Remove the ac line cord from both instrument sections.

Warning **With the ac power cords disconnected, voltages can still be present which, if contacted, could cause serious personal injury.**

2. Remove the feet ① from the rear of the instrument by removing the screws ② shown in Figure 1. Remove the feet ③ by removing the screws ④ and loosening the thumbscrews ⑤.
3. Separate the instruments by holding the RF Section in place and pulling forward, toward the front panel, on the IF-Display Section.

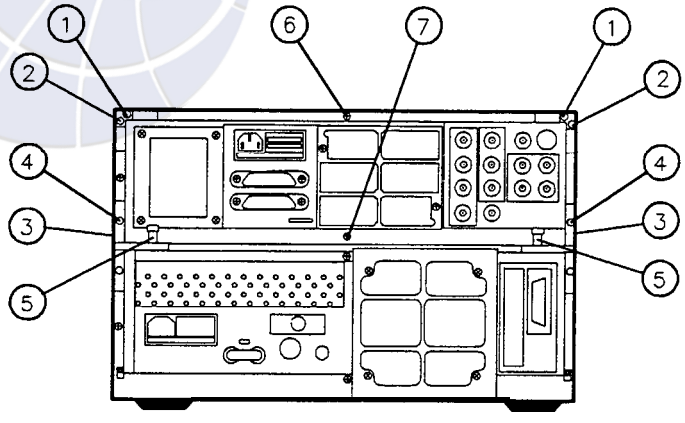

Figure 1. CRT Replacement, Instrument Rear View

4. When the instruments have been separated, remove the top cover from the IF-Display Section by loosening the screw ⑥ shown in Figure 1.

Analyzer Repair Inc.

Warning **In the following step, a large arc of high voltage should be drawn. Be careful. Use only one hand during the procedure.**

5. Locate the snap connector on the CRT post accelerator cable. It is shown as item ① in Figure 2. Using a long flat-bladed screwdriver with an insulated handle, carefully pry the connector loose but do not disconnect the cable.

   a. Using one hand, remove the end of the cable, ② of Figure 2. As the end of the cable becomes free, touch the end of the cable to the CRT's metal cover. A large arc of high voltage should ground to the CRT cover. The CRT is not discharged yet!

   b. Reconnect the CRT post accelerator cable, and repeat the above step until high-voltage arcs no longer appear.

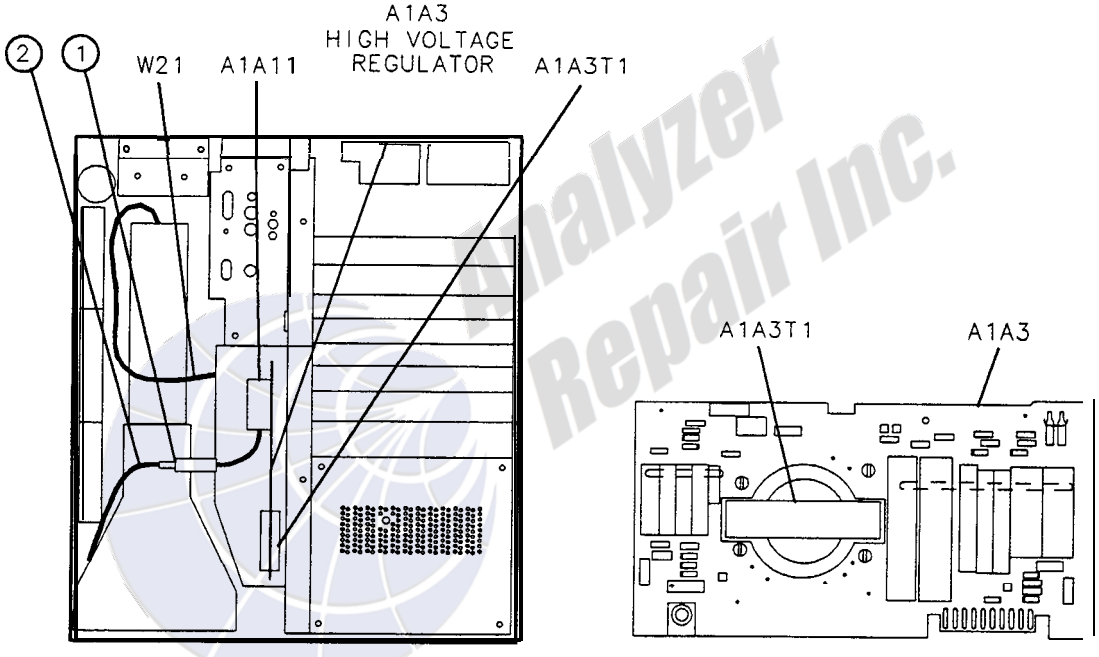

Figure 2. Discharging the CRT Post Accelerator Cable

6. Leave the CRT post accelerator cable disconnected, and remove the cover from the A1A3 High Voltage Regulator assembly.

7. Connect a jumper wire (insulated wire and two alligator clips) between the shaft of a small screwdriver and the chassis ground lug on the inside of the high-voltage shield.

8. While holding the insulated handle of the screwdriver, touch the grounded blade to the following connections:

   a. Both brown wires going to the rear of the CRT from A1A3 via cable harness W21.

   b. The yellow, blue, and orange wires in the same cable as "a." above.

   c. The top lead of each of the 11 large vertical capacitors on the A1A3 High-Voltage Regulator Assembly.

Analyzer Repair Inc.

9. Connect the jumper wire from chassis ground to the black wire coming from the A1A11 High-Voltage Multiplier at the wire's connection to A1A3T1.

10. Remove all jumper wires. The A1V1 CRT, the A1A3 High-Voltage Regulator, and the A1A11 High-Voltage Multiplier assemblies should now be discharged.

11. Remove the bottom cover of the IF-Display section by loosening the screw ⑦ shown in Figure 1. Discharge the four large A1A10 Motherboard capacitors by shorting the 2 screws, holding each capacitor to the motherboard, together.

12. Turn the instrument upside down as shown in Figure 3. Disconnect wire ⑧ ACC and wire ⑨ MESH from the neck of the CRT. Disconnect wires ①⓪ TA and wires ①① ORTHO from the A1A10 Motherboard.

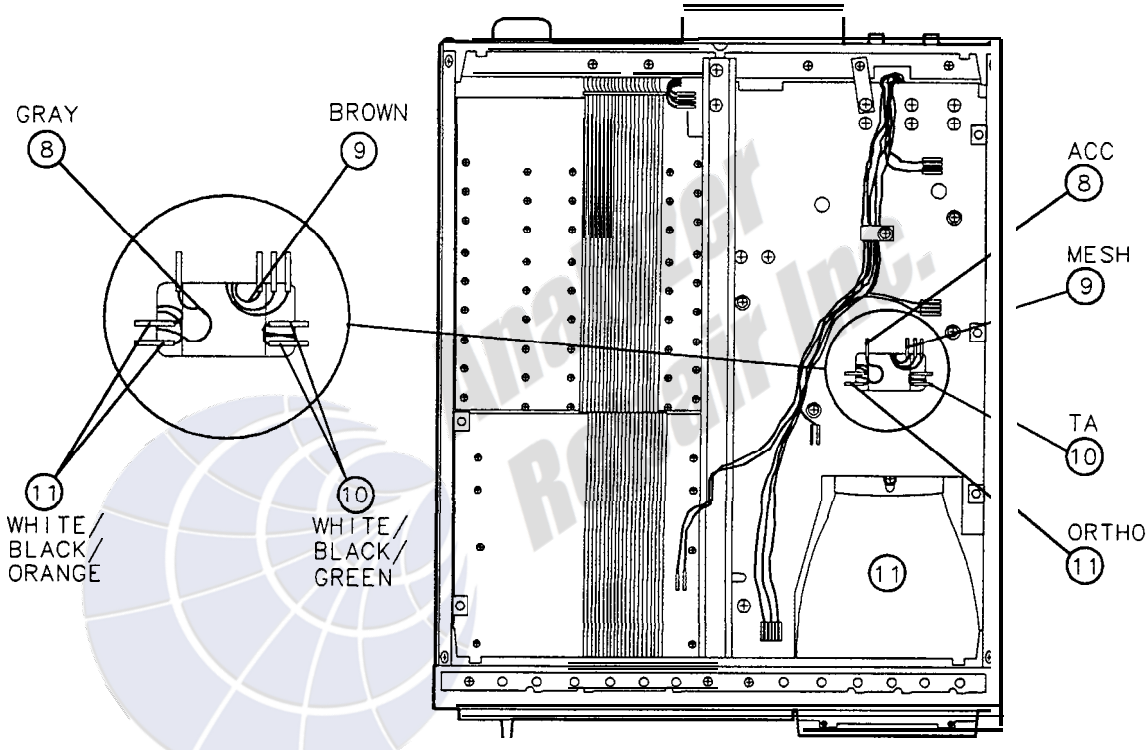

Figure 3. CRT Replacement, Bottom View, (Serial Number Prefixes: 2403A-3001A)

13. Turn the instrument over as shown in Figure 4. Remove wires ①③ from the neck of the CRT, noting the location of connections for the installation of new CRT.

14. It is necessary to remove the front panel to remove the CRT from the instrument. Refer to the Front Panel Removal and Repair procedure in the A1A1 Front Panel Assembly tab.

15. Loosen the two screws ①④ in the CRT clamp ①⑧. It is not necessary to remove these screws; the CRT can be removed if they have been loosened. To gain access to the clamp screw adjacent to the cover ①⑤, it is necessary to remove the cover by removing the screws ①⑥.The CRT is now loose.

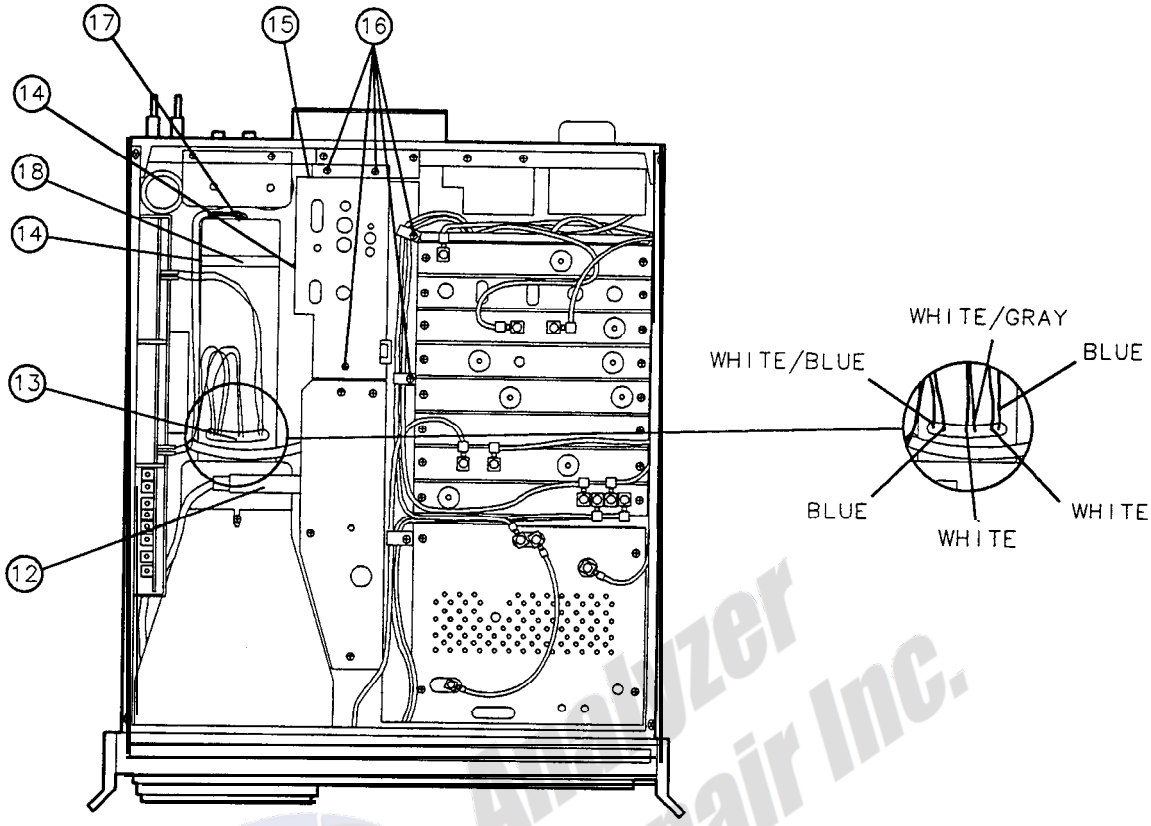

Figure 4. CRT Replacement, Top View, (Serial Number Prefixes: 2403A-3001A)

16. Pull the CRT forward through the front of the instrument far enough to allow room at the rear of the CRT. It must be pulled out far enough to disconnect the plug ⑰ from the socket at the rear of the CRT.

17. When the cable has been disconnected from the rear of the CRT, the tube can be removed from the instrument by pulling it out through front of the instrument.

18. Remove the screws on the shield that hold the coils together. Remove the CRT shield from the tube by first removing the foam grommet at the rear of the shield (between the tube socket and the shield), and then pulling the tube out of the shield. Be careful that the post accelerator cable and the pins on neck of the CRT are not damaged when the CRT is removed from the shields.

Analyzer Repair Inc.

Installation Procedures

1. Insert the foam grommet at the rear of the shield. Install the CRT shields on the new CRT. Be careful that the post accelerator cable and the pins on the neck of the new CRT are not damaged when the shields are installed on the CRT.
2. Insert the new CRT into the instrument through the front panel frame so that the rear of the tube passes through the clamp ⑱. Connect the plug ⑰ to the socket at the rear of the CRT. Refer to Figure 4.
3. Replace the front panel. Refer to the Front Panel Removal and Repair procedure in the A1A1 Front Panel Assembly tab, if necessary.
4. Pull the rear of the CRT forward, towards the front panel, to ensure that the CRT is properly mated with the front panel and tighten the screws ⑭ in the clamp ⑱. Refer to Figure 4.
5. Replace the cover ⑮ and install the screws ⑯ if that were removed during the CRT removal.
6. Connect wires ⑬ to the neck of the CRT and connect the post accelerator cable to connector ⑫.
7. Turn the instrument over as shown in Figure 3 and connect wires ⑧ and ⑨ to the neck of the CRT and wires ⑩ and ⑪ to the A1A10 Motherboard.
8. Replace the cover over the A1A3 High Voltage Reference.
9. Replace the top and bottom covers of the instrument. Reinstall feet ①, ③ on the instrument. Reattach the IF-Display Section to the RF Section. Tighten the thumbscrews ⑤. Refer to Figure 1.

Analyzer Repair Inc.

CRT Removal and Replacement (Serial Number Prefixes: 3004A and Above)

Warning **This procedure should be performed by qualified personnel only. Voltages are present which, if contacted, could cause serious personal injury. Approximately -2400 V dc can be present on the A1A3 High Voltage Regulator assembly even when the ac line cord is disconnected. The CRT can hold a +9500 V dc charge for several days if the post-accelerator cable is not discharged.**

Removal Procedures

1. Remove the ac line cord from both instrument sections.

Warning **With the ac power cords disconnected, voltages can still be present which, if contacted, could cause serious personal injury.**

2. Remove the feet ① from the rear of the instrument by removing the screws ② shown in Figure 5. Remove the feet ③ by removing the screws ④ and loosening the thumbscrews ⑤.

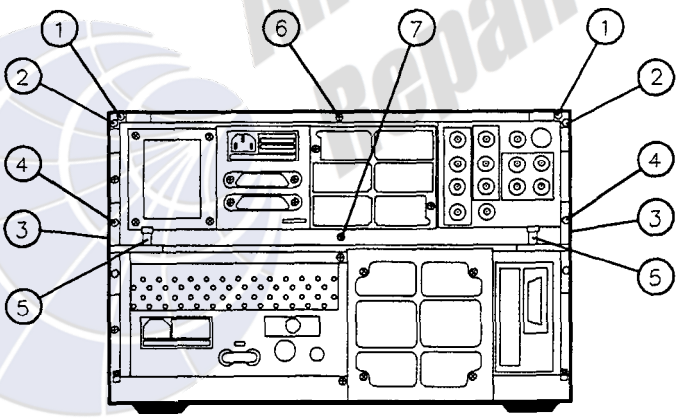

Figure 5. CRT Replacement, Instrument Rear View

Separate the instruments by holding the RF Section in place and pulling forward, toward the front panel, on the IF-Display Section.

3. When the instruments have been separated, remove the top cover from the IF-Display Section by loosening the screw ⑥ shown in Figure 5.

4. Remove the cover ⑧ from the A1A3 High Voltage Regulator by removing four screws ⑨. Refer to Figure 6.

Analyzer Repair Inc

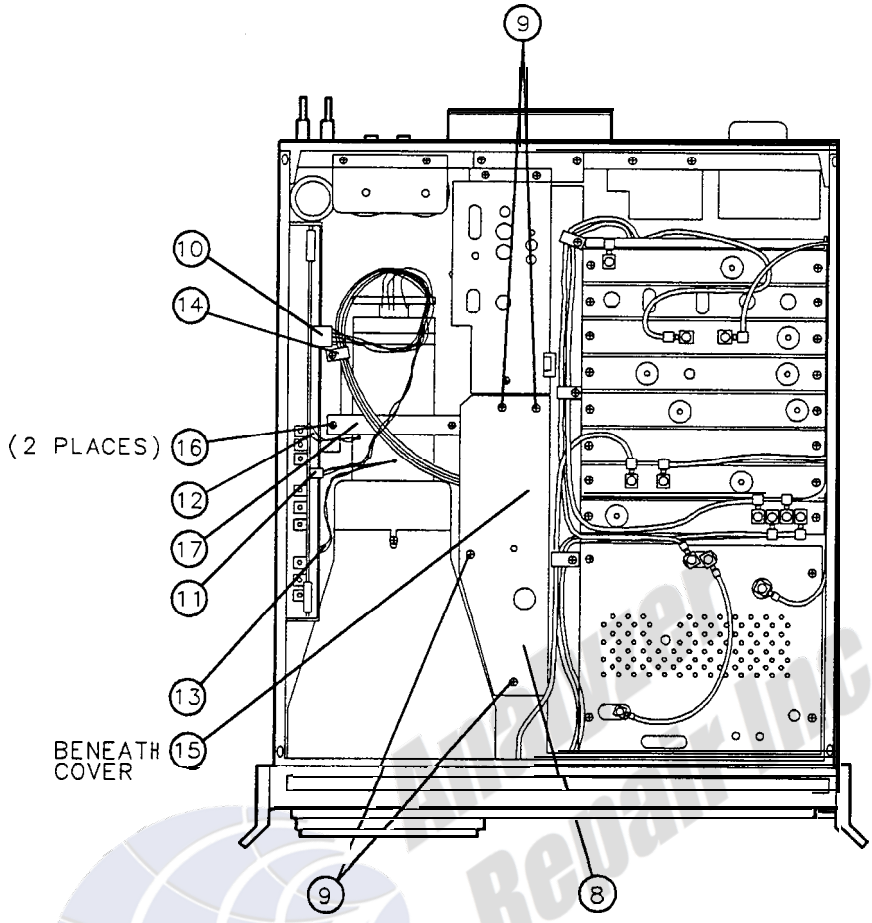

Figure 6. CRT Replacement, Top View, (Serial Number Prefixes: 3004A and Above)

5. Obtain an electrician's screwdriver which has a thin blade at least eight inches long. The handle of the screwdriver must be made of an insulating material.

6. Connect one end of a jumper wire (made of insulated wire and two alligator clips) to the blade of the screwdriver. Connect the other end of the jumper wire to the metal chassis of the IF-Display Section. This grounds the screwdriver.

7. Slide the screwdriver's blade through the sheet metal opening between the CRT and the A1A3 High Voltage Regulator as shown in Figure 7. Gently work the tip of the screwdriver under the post accelerator cable's rubber shroud. Make sure that the screwdriver's tip touches the connection between the post accelerator cable and the CRT. You should hear a cracking sound when the cable discharges. Use the blade of the screwdriver to unsnap the post accelerator cable from the CRT. Lay the post accelerator cable on top of the CRT shield to ground the cable. To ground the CRT, touch the opening on the side of the CRT, where the post accelerator connects, with the grounded tip of the screwdriver.

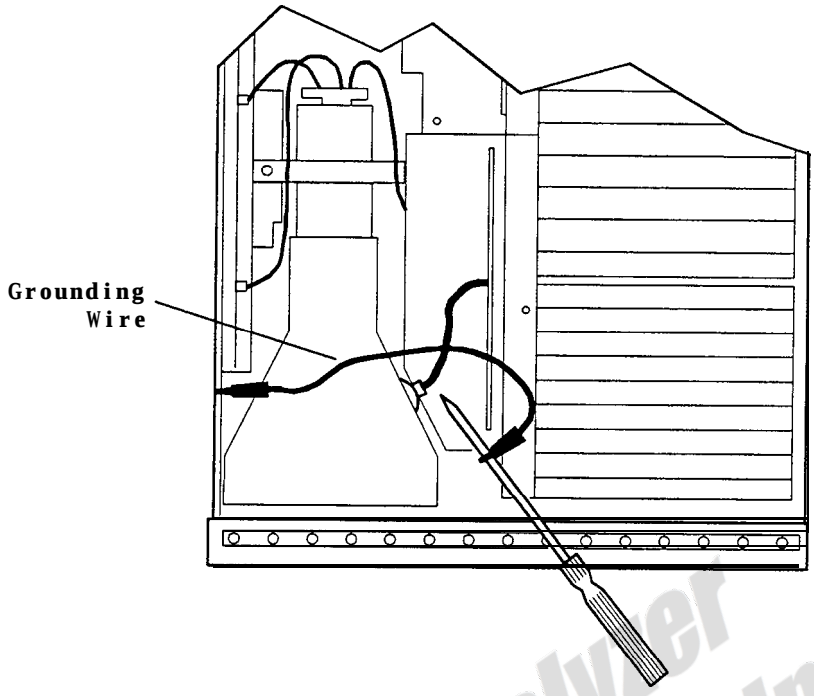

Figure 7. Discharging the CRT Post Accelerator Cable (Serial Number Prefixes: 3004A and Above)

8. Touch the screwdriver's tip to the top lead of each of the 11 large vertical capacitors on the A1A3 High Voltage Regulator assembly.
9. The A1A3 High Voltage Regulator and A1V1 CRT assemblies should now be discharged.
10. Remove the bottom cover of the IF-Display section by loosening the screw ⑦ shown in Figure 5. Discharge the four large A1A10 Motherboard capacitors by shorting the 2 screws, holding each capacitor to the motherboard, together.
11. Remove the front panel from the instrument. Refer to the Front Panel Removal and Repair procedure in the A1A1 Front Panel Assembly tab.
12. Remove the 4-wire, twin-lead output cable connector ⑩ from the A1A2 XYZ Driver Amplifier board assembly. Remove the 3-wire cable connector ⑪ from the A1A2 board assembly. Remove the two 904 (white/black/orange) wires ⑫ from the A1A2 board assembly. Remove the two 905 (white/black/green) wires ⑬ from the A1A2 board assembly.
13. Unscrew the cable clamp ⑭ of the 5-wire cable that comes from the rear of the CRT. Remove the 5-wire cable connector ⑮ from the jack of the A1A3 High Voltage Regulator. Remove the cable clamp from the 5-wire cable.
14. Remove the two screws ⑯ that attach the two rear CRT brackets to the instrument. Both the upper, flat bracket and the lower, U- shaped bracket ⑰ are attached to the CRT shield with double- sided tape. Do not remove these brackets from the CRT shield.
15. Slide the CRT out through the front of the instrument.
16. Remove the CRT from its shields.

Installation Procedures

1. Assemble the new CRT into it shields. Slide the new CRT into the instrument through the front frame.
2. Replace the front panel. Refer to the Front Panel Removal and Repair procedure in the A1A1 Front Panel Assembly tab, if necessary.
3. The CRT must be aligned with the display area of the front panel. The CRT should fit snug against the glass shield of the front panel. Removing the two front panel knobs, dress panel, and the keyboard from the front of the front panel allows the CRT to be aligned more easily.
4. When the CRT is aligned with the front panel glass shield, secure the two rear CRT brackets ⑰ to the instrument with two screws ⑯. The brackets have double-sided tape to keep the CRT from sliding in the instrument. Replace the tape if necessary. Refer to Figure 6.
5. Snap the Post Accelerator Cable from the A1A3 High Voltage Regulator into the receptacle in the lower left side of the CRT.
6. Connect the 4-wire, twin-lead output cable connector ⑩ to the A1A2 XYZ Driver Amplifier board assembly. Connect the 3-wire cable connector ⑪ to the A1A2 board assembly. Connect the two 904 (white/black/orange) wires ⑫ to the A1A2 board assembly. Connect the two 905 (white/black/green) wires ⑬ to the A1A2 board assembly.
7. Place the cable clamp ⑭ on the 5-wire cable from the rear of the CRT. Screw the cable clamp into place. Connect the 5-wire cable connector ⑮ to the A1A3 High Voltage Regulator jack.
8. Replace the cover ⑧ over the A1A3 High Voltage Regulator. Secure in place with 4 screws ⑨.
9. Replace the top and bottom covers of the instrument. Reinstall feet ①, ③ on the instrument. Reattach the IF-Display Section to the RF Section. Tighten the thumbscrews ⑤. Refer to Figure 5.

HP Part Number 85662-60059

A1A3 High Voltage Regulator

Reference Designatior	HP Part Number	C D	Qty	Description	Mfr Code	Mfr Part Number
A1A3	85662-60059		1	HIGH VOLTAGE REGULATOR BOARD ASSEMBLY (SERIAL PREFIXES: 2403A-3001A)	2848C	85662-60059
A1A3C1	0160-4148		1	CAP-FXD 0.033uF 6 kV POLYE-MET	56289	430P333060
A1A3C2	0160-2264		1	CAPACITOR-FXD 20PF +-5% 500VDC CER 0+-3(	52763	2RDPLX05020RNP0
A1A3C3	0160-4148		1	CAP-FXD 0.033uF 6 kV POLYE-MET	56289	430P333060
A1A3C4	0160-3960		1	CAPACITOR-FXD 1000PF +-20% 8KVDC MET-POL	56289	430P102080
A1A3C5	0160-3960		1	CAPACITOR-FXD 1000PF +-20% 8KVDC MET-POL	56289	430P102080
A1A3C6	0160-0678		1	CAPACITOR-FXD .01UF +-20% 6KVDC MET-POLY	56289	430P103060
A1A3C7	0160-0678		1	CAPACITOR-FXD .01UF +-20% 6KVDC MET-POLY	56289	430P103060
A1A3C8	0160-0543		1	CAPACITOR-FXD 4700PF +-20% 4KVDC MET-POL	56289	430P472040
A1A3C9	0160-2264		1	CAPACITOR-FXD 20PF +-5% 500VDC CER 0+-3C	52763	2RDPLX05020RNP0
A1A3C10	0160-0543		1	CAPACITOR-FXD 4700PF +-20% 4KVDC MET-POL	56289	430P472040
A1A3C11	0160-0543		1	CAPACITOR-FXD 4700PF +-20% 4KVDC MET-POL	56289	4308472040
A1A3C12	0160-3456		1	CAPACITOR-FXD 1000PF +-10% 1KVDC CER		808-542 X5E 102K
A1A3C13	0160-0543		1	CAPACITOR-FXD 47DOPF +-20% 4KVDC MET-POL	56289	430P472040
A1A3C14	0180-0269		1	CAP-FXD 1uF 150 V AL-ELCTLT	56289	30D105F150BA2
A1A3CR1	1901-0683		1	DIODE-HV RECT 10KV 5MA 250NS	83701	
A1A3CR2	1901-0028		1	DIODE-PWR RECT 400V 750MA DO-29	04713	
A1A3CR3	1901-0028		1	DIODE-PWR RECT 400V 750MA DO-29	04713	
A1A3CR4	1901-0028		1	DIODE-PWR RECT 400V 750MA DO-29	04713	
A1A3CR5	1901-0028		1	DIODE-PWR RECT 400V 750MA DO-29	04713	
A1A3CR6	1901-0028		1	DIODE-PWR RECT 400V 750MA DO-29	04713	
A1A3CR7	1901-0028		1	DIODE-PWR RECT 400V 750MA DO-29	04713	
A1A3CR8	1901-0028		1	DIODE-PWR RECT 400V 750MA DO-29	04713	
A1A3CR9	1901-0028		1	DIODE-PWR RECT 400V 750MA DO-29	04713	
A1A3MP1	0340-0007		4	STANDOFF-RND .5-IN-LG 6-32-THD .5-IN-OD	70371	
A1A3MP2	0360-1788		5	CONNECTOR-SGL CONT PIN .045-IN-BSC-SZ SQ	04574	
A1A3MP3	2360-0275		8	SCREW-MACH 6-32 .25-IN-LG BDG-HO-SLT	73734	102222
A1A3MP4	85662-00068		1	BRACKET	28480	85662-00068
A1A3MP5	2360-0115		1	SCREW-MACH 6-32 .312-IN-LG PAN-HD-POZI	93907	
A1A3MP6	3050-0227		1	UASHER-FL MTLC NO. 6 .149-IN-ID	80120	AN960C-6
A1A3MP7				NOT ASSIGNED		
A1A3R1	0698-8737		1	RESISTOR 100K +-5% .25W CC TC=-400/+800	01121	CB1045
A1A3R2	0687-3941		1	RESISTOR 390K 10% .5W CC TC=0+882	01121	EB3941
A1A3R3	3687-4721		1	RESISTOR 4.7K 10% .5W CC TC=0+647	01121	EB4721
A1A3R4	3698-8018		1	RESISTOR 30M +-1% 3W TKF TC=0+-100	03888	PVC175
A1A3R5	3698-8777		1	RESISTOR 1K +-5% .25W CC TC=-400/+900	01121	CB1025
A1A3R6	3698-8777		1	RESISTOR 1K +-5% .25W CC TC=-400/+900	01121	CB1025
A1A3R7	3686-1065		1	RESISTOR 10M 5% .5W CC TC=0+1059	01121	EB1065
A1A3R8	3698-8777		1	RESISTOR 1K +-5% .25W CC TC=-400/+900	01121	CB1025
A1A3R9	3698-8777		1	RESISTOR 1K +-5% .25W CC TC=-400/+900	01121	CB1025
A1A3R10	0699-1064		1	RESISTOR 1M +-5% .25W CC TC=-600/+900	01121	CB1055
A1A3R11	1687-2221		1	RESISTOR 2.2K 10% .5W CC TC=0+647	01121	EB2221
A1A3R12	0687-1001		1	RESISTOR 10 10% .5W CC TC=0+412	01121	EB1001
A1A3R13	0698-8992		1	RESISTOR 8M +-2% 1W TF TC=0+-250	03888	FL1
A1A3R14	2100-3626		1	RESISTOR-TRMR 2M 20% TKF SIDE-ADJ 1-TRN	32997	3386X-Y46-205
A1A3R15	0698-8993		1	RESISTOR 14M +-2% 1W TF TC=0+-250	03888	FL1

**Indicates factory-selected value*

HP Part Number 85662-60059

A1A3 High Voltage Regulator

Reference Designation	HP Part Number	CD	Qty	Description	Mfr Code	Mfr Part Number
A1A3R16	0698-8768	2	1	RESISTOR 100 +-5% .25W CC TC=-400/+500	01121	CB1015
A1A3R17	0687-3941	0	1	RESISTOR 390K 10% .5W CC TC=0+882	01121	EB3941
A1A3R18	0699-1065	0	1	RESISTOR 10K +-5% .25W CC TC=-400/+700	01121	CB1035
A1A3R19	0686-1065	3	1	RESISTOR 10M 5% .5W CC TC=0+1059	01121	EB1065
A1A3R20	0698-8777	3	1	RESISTOR 1K +-5% .25W CC TC=-400/+900	01121	CB1025
A1A3R21	0698-8777	3	1	RESISTOR 1K .25W CC TC=-400/+900	01121	CB1025
A1A3R22	0699-1064	9	1	RESISTOR 1M +-5% .25W CC TC=-600/+900	01121	CB1055
A1A3R23	0687-2231	9	1	RESISTOR 22K 10% .5W CC TC=0+765	01121	EB2231
A1A3R24	0687-6801	7	1	RESISTOR 68 10% .5W CC TC=0+412	01121	EB6801
A1A3T1	01332-61106	4	1	HIGH VOLTAGE TRANSFORMER	28480	01332-61106
A1A3TP4	0360-0535	0	1	TERMINAL-TEST POINT .330IN ABOVE	46819	
A1A3TP5	0360-0535	0	1	TERMINAL-TEST POINT .330IN ABOVE	46819	
A1A3V1	2140-0018	0	1	LAMP-GLOW A9A-CT 90VDC 700UA T-2-BULB	71744	A9A-CT (NE2E1T)
A1A3V2	2140-0018	0	1	LAMP-GLOW A9A-CT 90VDC 700UA T-2-BULB	71744	A9A-CT (NE2E1T)
A1A3VR1	1902-0182	4	1	DIODE-ZNR 20.5V 5% DO-35 PD=.4W	04713	
A1A3VR2	1902-0197	1	1	DIODE-ZNR 82V 5% PD=1W IR=5UA	04713	
A1A3W1	8151-0014	5	1	WIRE 24AWG 1X24	94130	
A1A3W2	8151-0014	5	1	WIRE 24AWG 1X24	94130	
A1A3W3	8151-0014	5	1	WIRE 24AWG 1X24	94130	
A1A3W4	8151-0014	5	1	WIRE 24AWG 1X24	94130	
A1A3W5	8151-0014	5	1	WIRE 24AWG 1X24	94130	
A1A3W6	8151-0014	5	1	WIRE 24AWG 1X24	94130	
A1A3W7	8151-0014	5	1	WIRE 24AWG 1X24	94130	

Analyzer Repair Inc.

**Indicates factory-selected value*

HP Part Number 85662-60233

A1A3 High Voltage Regulator

Reference Designation	HP Part Number	C D	Qty	Description	Mfr Code	Mfr Part Number
A1A3	85662-60233	1	1	HIGH VOLTAGE REGULATOR BOARD ASSEMBLY (SERIAL PREFIX: 3004A)	28480	85662-60233
A1A3A1	5062-7089	6	1	HIGH VOLTAGE MODULE	28480	5062-7089
A1A3C1	0160-4148	5	1	CAP-FXD 0.033uF 6 kV POLYE-MET	04200	430P333060
A1A3C2	0160-0684	6	1	CAP-FXD 1000pF 4 kV POLYE-MET	04200	430P102040
A1A3C3	0160-4148	5	1	CAP-FXD 0.033uF 6 kV POLYE-MET	04200	430P333060
A1A3C4	0160-0684	6	1	CAP-FXD 1000pF 4 kV POLYE-MET	04200	430P102040
A1A3C5	0160-4051	9	1	CAP-FXD 0.01uF 4 kV POLYE-MET	04200	430P103040
A1A3C6	0160-4051	9	1	CAP-FXD 0.01uF 4 kV POLYE-MET	04200	430P103040
A1A3C7	0160-4051	9	1	CAP-FXD 0.01uF 4 kV POLYE-MET	04200	430P103040
A1A3C8	0160-0543	6	1	CAP-FXD 4700pF 4 kV PDLYE-MET	04200	430P472040
A1A3C9	0160-0543	6	1	CAP-FXD 4700pF 4 kV POLYE-MET	04200	430P472040
A1A3C10	0160-0543	6	1	CAP-FXD 4700pF 4 kV POLYE-MET	04200	430P472040
A1A3C11	0180-0269	5	1	CAP-FXD 1uF 150 V AL-ELCTLT	00493	150T1R0T6X13M
A1A3C13	0160-2201	7	1	CAP-FXD 51pF 300 V MICA	02367	CD15ED510J03
A1A3C14	0160-2201	7	1	CAP-FXD 51pF 300 V MICA	02367	CD15ED510J03
A1A3C15	3160-3456	5	1	CAP-FXD 1000pF 1 kV	06352	CK45XE3A102K-H
A1A3CR1	1901-0028	5	1	DIODE-PWR RECT 400V 750MA DO-29	02037	
A1A3CR2	1901-0028	5	1	DIODE-PWR RECT 400V 750MA DO-29	02037	
A1A3CR3	1901-0028	5	1	DIODE-PWR RECT 400V 750MA DO-29	02037	
A1A3CR4	1901-0028	5	1	DIODE-PWR RECT 400V 750MA DO-29	02037	
A1A3CR5	1901-0028	5	1	DIODE-PWR RECT 400V 750MA DO-29	02037	
A1A3CR6	1901-0028	5	1	DIODE-PWR RECT 400V 750MA DO-29	02037	
A1A3CR7	1901-0028	5	1	DIODE-PWR RECT 400V 750MA DO-29	02037	
A1A3CR8	1901-0028	5	1	DIODE-PWR RECT 400V 750MA DO-29	02037	
A1A3DS1	2140-0018	0	1	LAMP-GLOW A9A-CT 90VDC 700UA T-2-BULB	00466	A9A-CT
A1A3DS2	2140-0018	0	1	LAMP-GLOW A9A-CT 90VDC 700UA T-2-BULB	00466	A9A-CT
A1A3J1	1252-1744	7	1	CDNN-POST TYPE .100-PIN-SPCG 5-CONT	01380	103414-3
A1A3J3	1252-1644	6	1	CONN-POST TYPE .156-PIN-SPCG 4-CDNT	01380	644087-2
A1A3J4	1252-1645	7	1	CONN-POST TYPE .156-PIN-SPCG 5-CONT	01380	643734-2
A1A3MP1				NOT ASSIGNED		
A1A3MP4	2360-0117	5	1	SCREW-MACH 6-32 .375-IN-LG PAN-HD-POZI	01125	
A1A3MP5	8151-0013	4	1	WIRE 22AWG 1X22	02805	8021-100
A1A3MP6	0590-1076	3	3	THREADED INSERT-NUT M3 X 0.5 1.5-MM-LG	03981	KFS2-M3
A1A3R1	3687-4721	5	1	RESISTOR 4.7K 10% .5W CC TC=0+647	01607	EB4721
A1A3R2	1699-0172	3	1	RESISTOR 3M +-5% 1W TF TC=0+-250	01992	FL1
A1A3R3	1698-8018	5	1	RESISTOR 30M +-1% 3W TKF TC=0+-100	01992	PVC175
A1A3R4	1698-8777	3	1	RESISTOR 1K +-5% .25W CC TC=-400/+900	01607	CB1025
A1A3R5	0686-1065	3	1	RESISTOR 10M 5% .5W CC TC=0+1059	01607	EB1065
A1A3R6	0699-1064	3	1	RESISTOR 1M +-5% .25W CC TC=-600/+900	01607	CB1055
A1A3R7	1698-8768	2	1	RESISTOR 100 +-5% .25W CC TC=-400/+500	01607	CB1015
A1A3R8	0698-8777	3	1	RESISTOR 1K +-5% .25W CC TC=-400/+900	01607	CB1025
A1A3R9	0757-0127	7	1	RESISTOR 215K +-1% .5W TF TC=0+-100	01074	H2
A1A3R10	0757-0280	3	1	RESISTOR 1K +-1% .125W TF TC=0+-100	00746	CRB14 OR CRB25
A1A3R11	0757-0280	3	1	RESISTOR 1K +-1% .125W TF TC=0+-100	00746	CRB14 OR CRB25
A1A3R12	0698-0084	9	1	RESISTOR 2.15K 1% .125W TF TC=0+-100	00746	CRB14 OR CRB25
A1A3R13	0757-0346	2	1	RESISTOR 10 +-1% .125W TF TC=0+-100	00746	CRB14 OR CRB25
A1A3R14	2100-3626	8	1	RESISTOR-TRMR 2M 20% TKF SIDE-ADJ 1-TRN	03744	3386X-Y46-205

**Indicates factory-selected value*

HP Part Number 85662-60233

A1A3 High Voltage Regulator

Reference Designatior	HP Part Number	D	Qty	Description	Mfr Code	Mfr Part Number
A1A3R15	3699-0171		1	RESISTOR 6.5M +-5% 1W TF TC=0+-250	01992	FL1
A1A3R16	1699-1065	(	1	RESISTOR 10K +-5% .25W CC TC=-400/+700	01607	CB1035
A1A3R17	1686-1065	3	1	RESISTOR 10M 5% .5W CC TC=0+1059	01607	EB1065
A1A3R18	)699-1064	(	1	RESISTOR 1M +-5% .25W CC TC=-600/+900	01607	CB1055
A1A3R19	1698-8777	3	1	RESISTOR 1K +-5% .25W CC TC=-400/+900	01607	CB1025
A1A3R20	)757-0280	3	1	RESISTOR 1K +-1% .125W TF TC=0+-100	00746	CRB14 OR CRB25
A1A3R21	)757-0199	.	1	RESISTOR 21.5K +-1% .125W TF TC=0+-100	00746	CRB14 OR CRB25
A1A3R22	)757-0397	.	1	RESISTOR 68.1 +-1% .125W TF TC=0+-100	00746	CRB14 OR CR825
A1A3R23	)757-0127	7	1	RESISTOR 215K +-1% .5W TF TC=0+-100	01074	H2
A1A3R26	)698-8777	3	1	RESISTOR 1K +-5% .25W CC TC=-400/+900	01607	C81025
A1A3TP3	0360-0535	"	1	TERMINAL-TEST POINT .330IN ABOVE	04055	
A1A3TP4	0360-0535		1	TERMINAL-TEST POINT .330IN ABOVE	04055	
A1A3TP5	3360-0535		1	TERMINAL-TEST POINT .330IN ABOVE	04055	
A1A3TP6	3360-0535		1	TERMINAL-TEST POINT .330IN ABOVE	04055	
A1A3TP7	0360-0535		1	TERMINAL-TEST POINT .330IN ABOVE	04055	
A1A3VR1	1902-3301		1	DIODE-ZNR 34.8V 5% DO-35 PD=.4W	02037	
A1A3VR2	1902-0197		1	DIODE-ZNR 82V 5% PD=1W IR=5UA	02037	

Analyzer Repair Inc.

**Indicates factory-selected value*

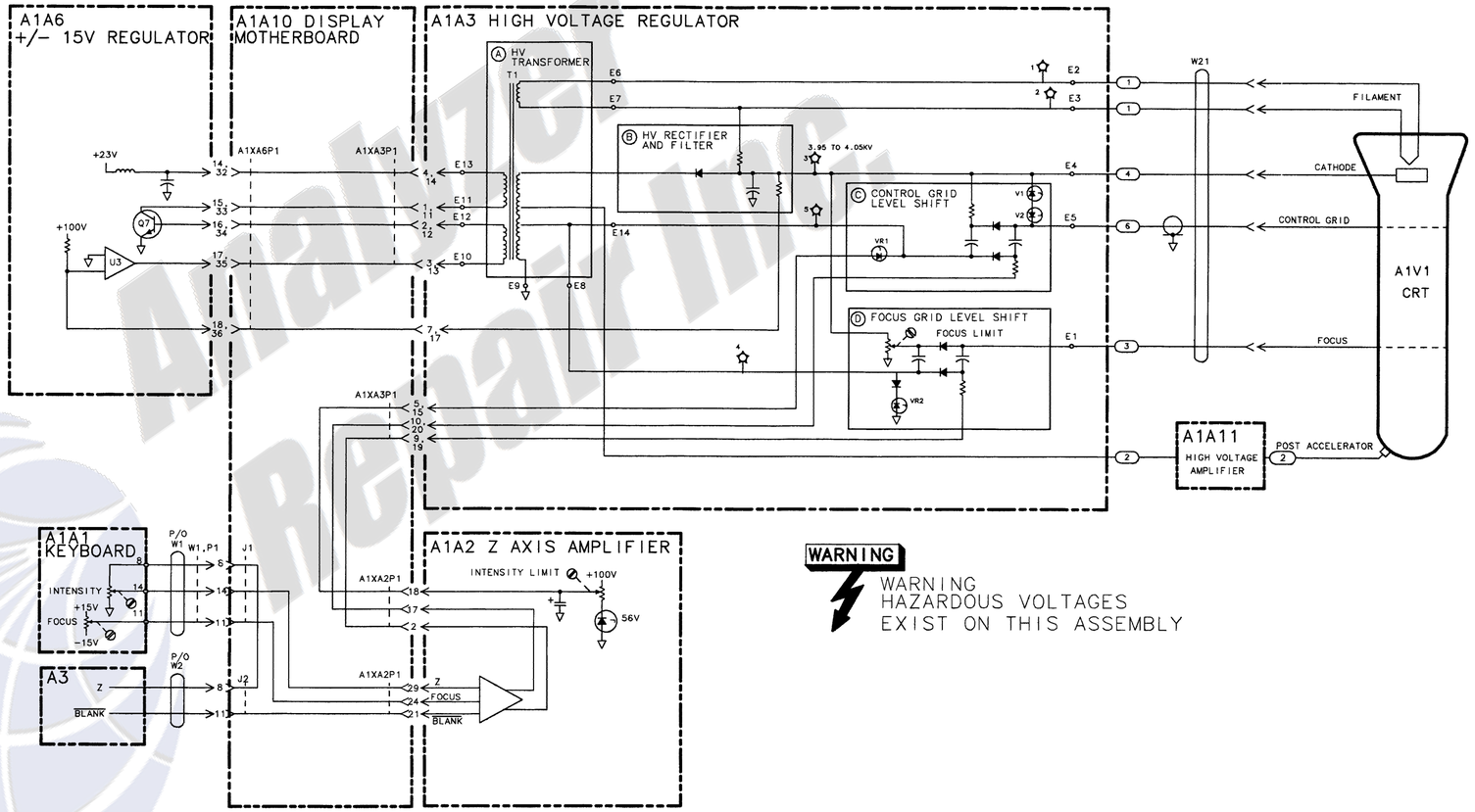

WARNING

WARNING
HAZARDOUS VOLTAGES
EXIST ON THIS ASSEMBLY

A1A3 HIGH VOLTAGE REGULATOR, BLOCK DIAGRAM
(SERIAL NUMBER PREFIXES: 2403A-3001A)

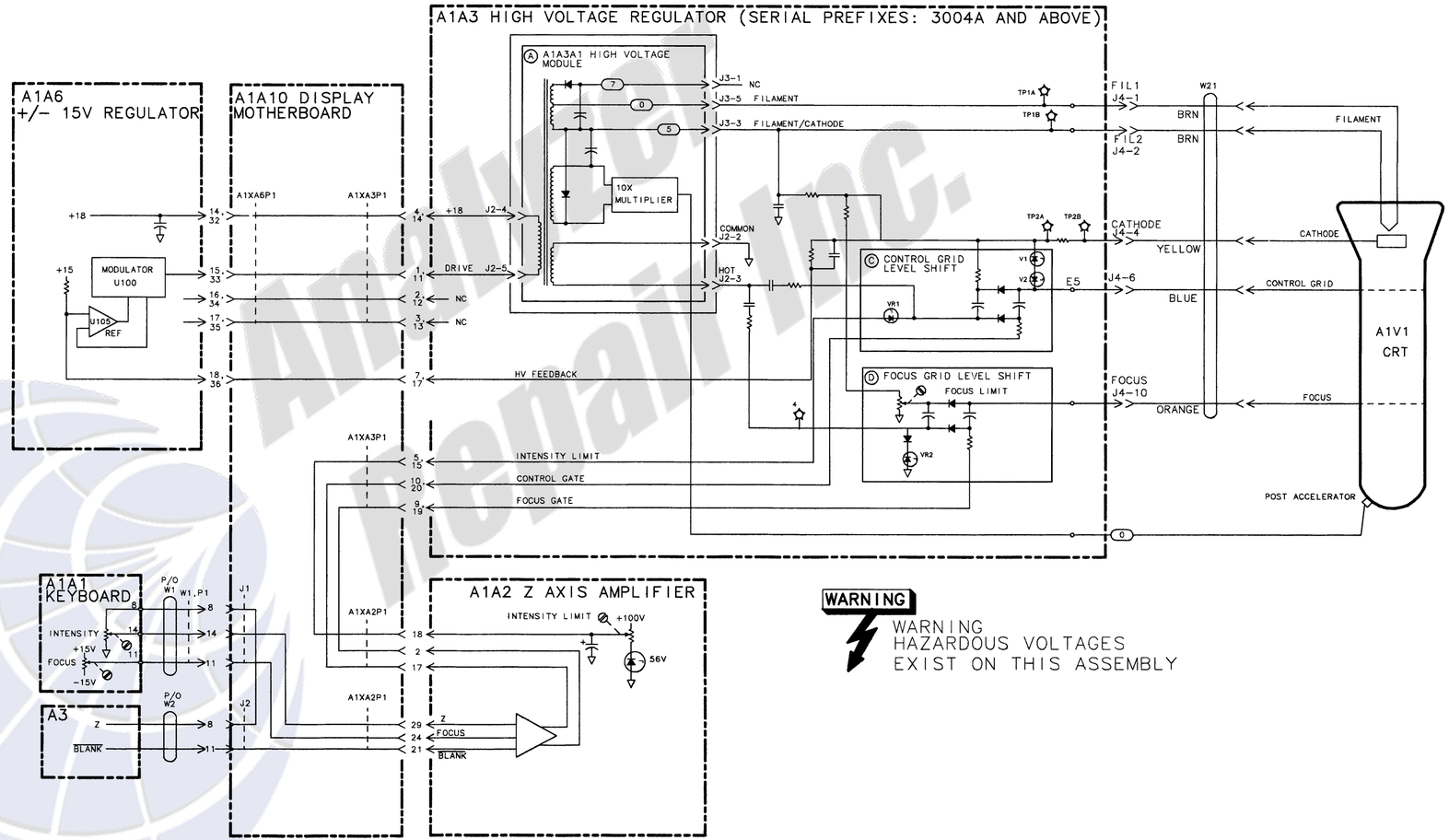

WARNING

WARNING
HAZARDOUS VOLTAGES
EXIST ON THIS ASSEMBLY

A1A3 HIGH VOLTAGE REGULATOR, BLOCK DIAGRAM
(SERIAL NUMBER PREFIXES: 3004A AND ABOVE)

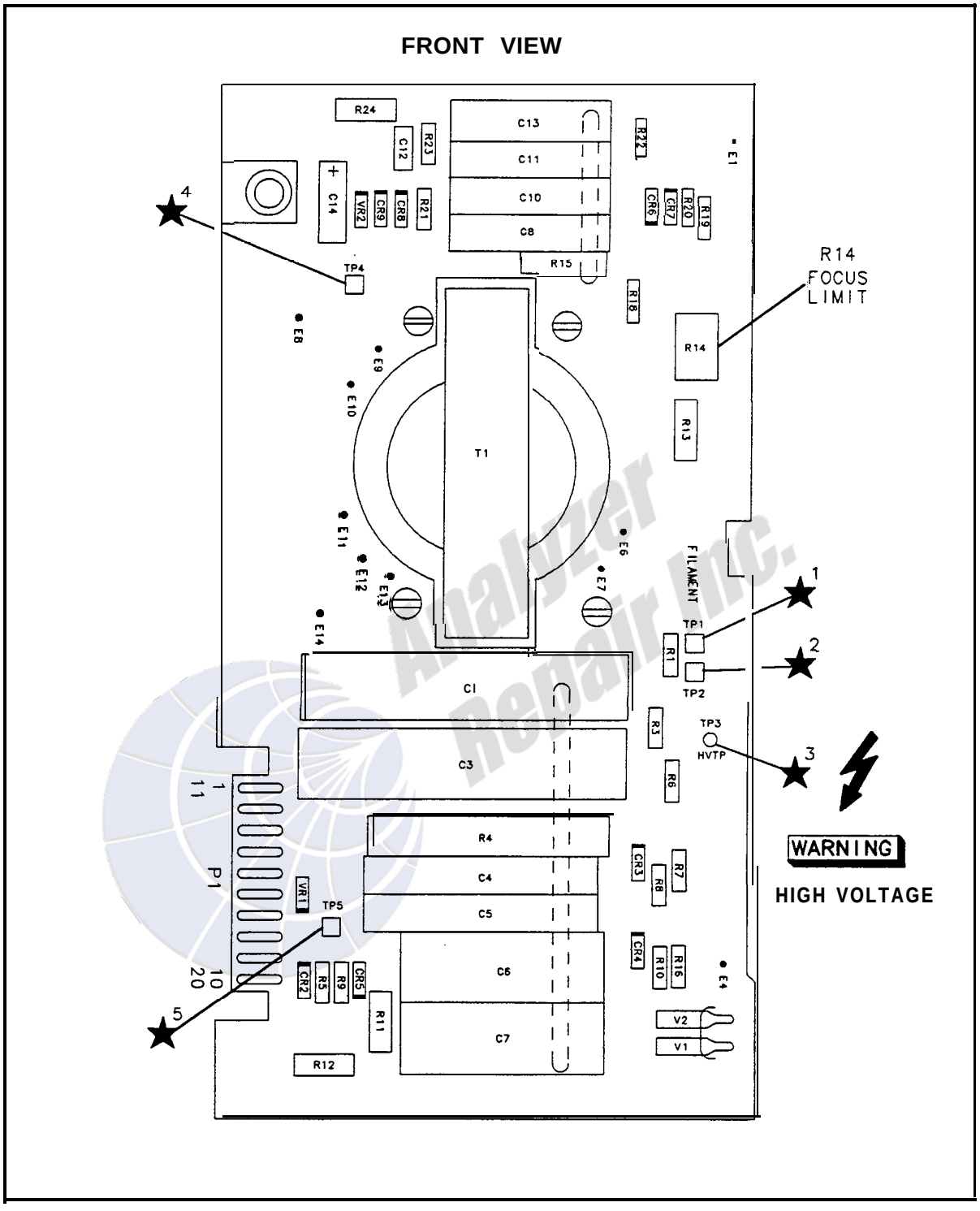

A1A3 High Voltage Regulator Component Locations, Front View **85662-60059**

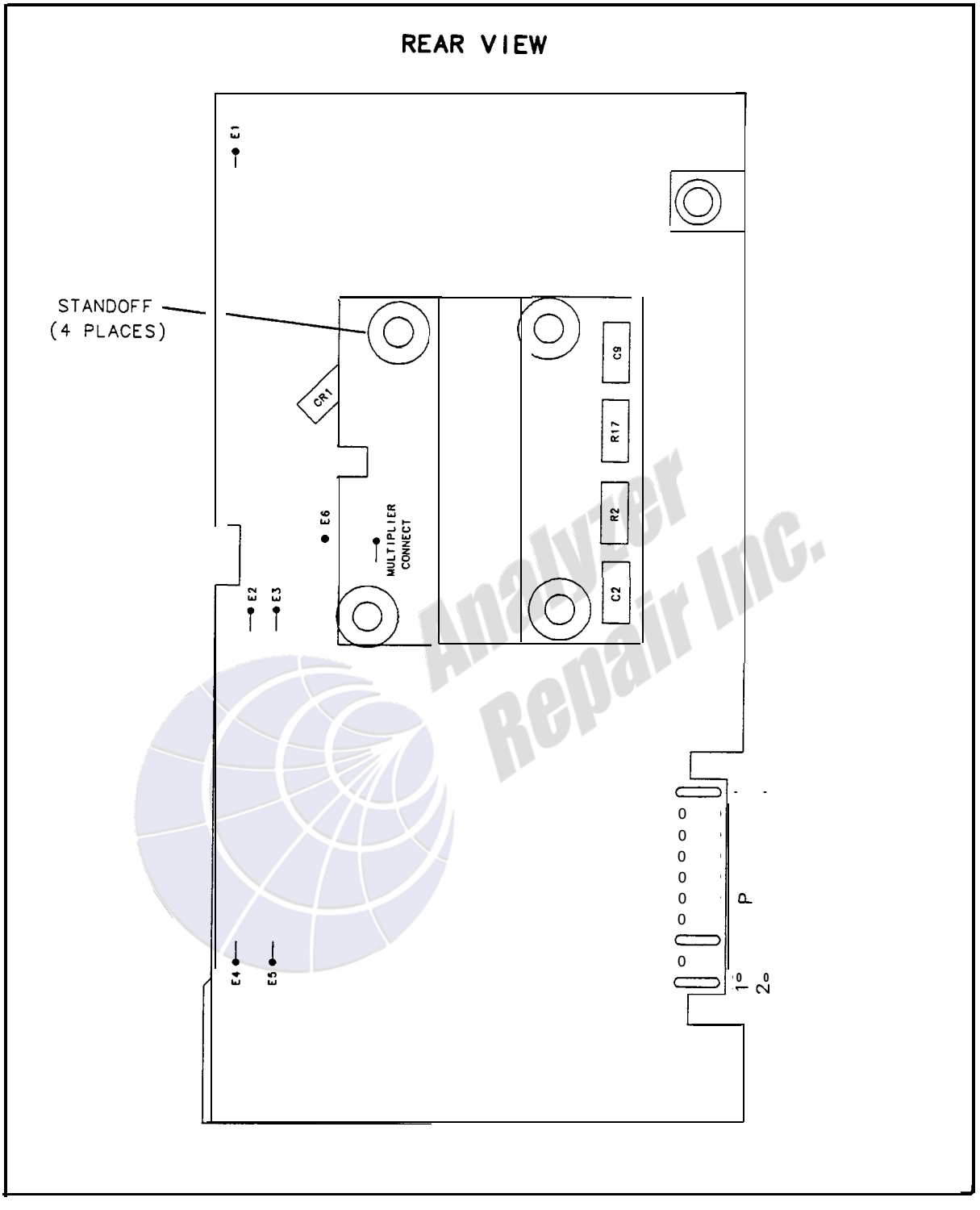

A1A3 High Voltage Regulator Component Locations, Rear View 85662-60059

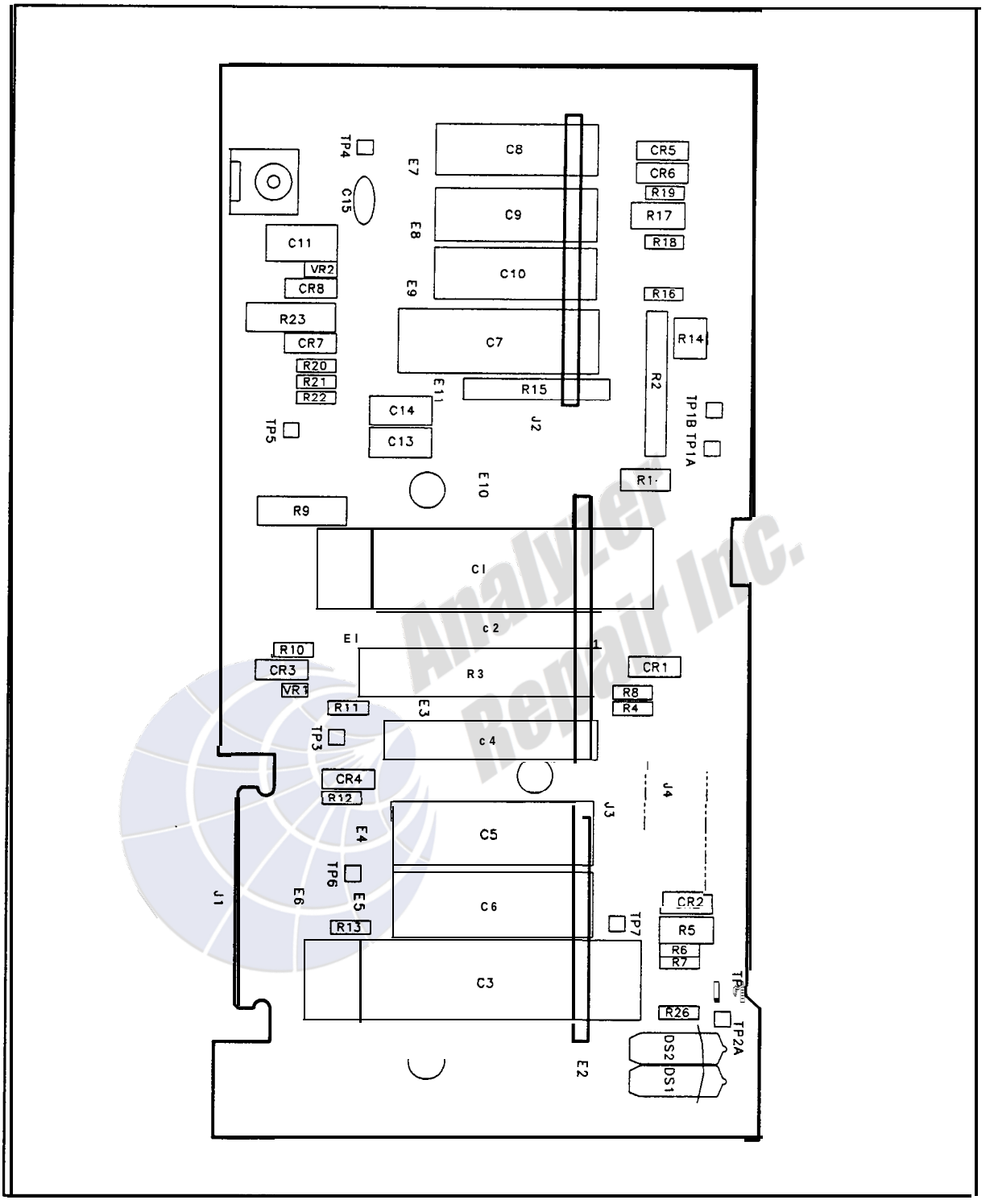

A1A3 High Voltage Regulator Component Locations, 85662-60233

A1A3 HIGH VOLTAGE REGULATOR
85662-60059
(SERIAL PREFIXES: 2403A-3001A)

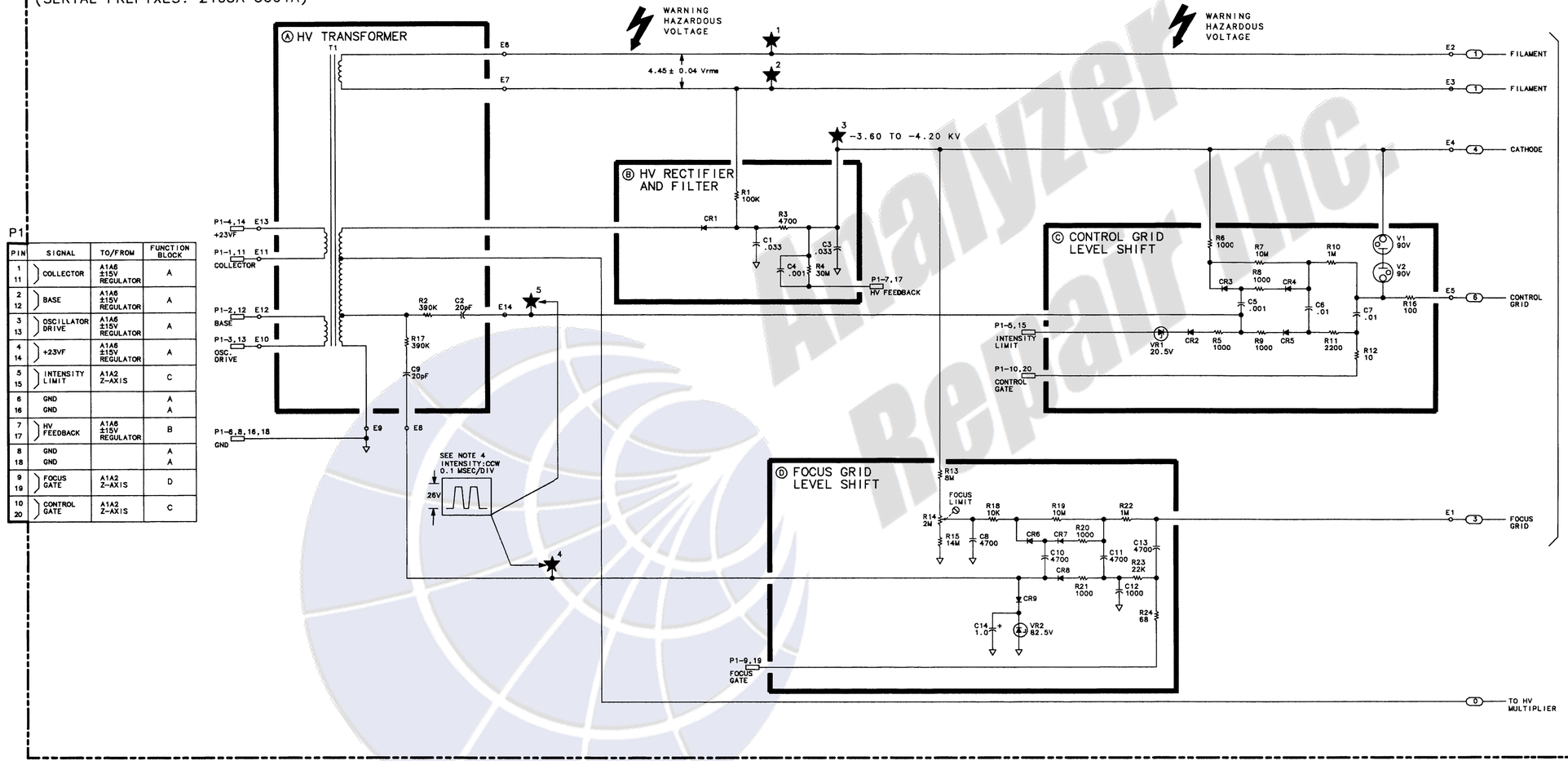

P1

PIN	SIGNAL	TO/FROM	FUNCTION BLOCK
1, 11	COLLECTOR	A1A6 ±15V REGULATOR	A
2, 12	BASE	A1A6 ±15V REGULATOR	A
3, 13	OSCILLATOR DRIVE	A1A6 ±15V REGULATOR	A
4, 14	+23VF	A1A6 ±15V REGULATOR	A
5, 15	INTENSITY LIMIT	A1A2 Z-AXIS	C
6	GND		A
16	GND		A
7, 17	HV FEEDBACK	A1A6 ±15V REGULATOR	B
8	GND		A
18	GND		A
9, 19	FOCUS GATE	A1A2 Z-AXIS	D
10, 20	CONTROL GATE	A1A2 Z-AXIS	C

NOTES:

1. REFERENCE DESIGNATORS WITHIN THIS ASSEMBLY ARE ABBREVIATED. FOR COMPLETE REFERENCE DESIGNATION, PREFIX ABBREVIATION WITH ASSEMBLY DESIGNATION.
2. UNLESS OTHERWISE INDICATED: RESISTANCE IS IN OHMS (Ω) CAPACITANCE IS IN MICROFARADS(μF) INDUCTANCE IS IN MICROHENRIES(μH)
3. UNLESS OTHERWISE INDICATED: SIGNALS ENTER AT LEFT SIDE OR TOP AND EXIT AT RIGHT SIDE OR BOTTOM OF FUNCTION BLOCKS.
4. BECAUSE TP4 AND TP5 ARE DIFFICULT TO REACH: USE CAUTION WHEN MAKING MEASUREMENTS AT THESE POINTS.

A1A3

A1A3 HIGH VOLTAGE REGULATOR, SCHEMATIC DIAGRAM

Analyzer Repair Inc

A1A3 HIGH VOLTAGE REGULATOR
85662-60233
(SERIAL PREFIXES: 3004A AND ABOVE)

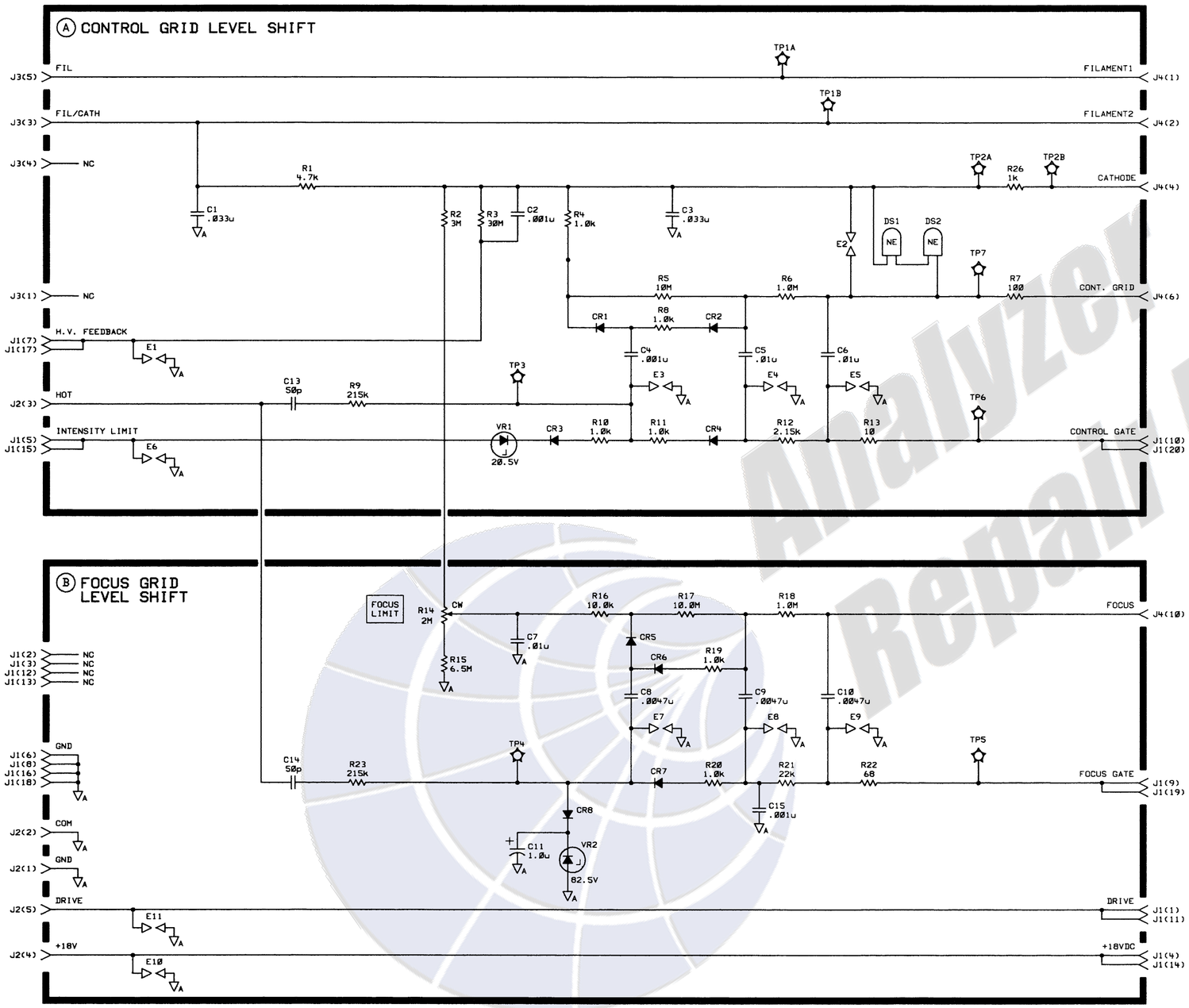

J1

PIN	SIGNAL	TO/FROM	FUNCTION BLOCK
1	DRIVE		B
2	N/C		
3	N/C		
4	+18VDC		B
5	INTENSITY LIMIT		A
6	GND		B
7	H.V. FEEDBACK		A
8	GND		B
9	FOCUS GATE		B
10	CONTROL GATE		A
11	DRIVE		B
12	N/C		
13	N/C		
14	+18VDC		B
15	INTENSITY LIMIT		A
16	GND		B
17	H.V. FEEDBACK		A
18	GND		B
19	FOCUS GATE		B
20	CONTROL GATE		A

J2

PIN	SIGNAL	TO/FROM	FUNCTION BLOCK
1	DRIVE		B
2	+18V		B
3	HOT		A
4	COM		B
5	GND		B

J3

PIN	SIGNAL	TO/FROM	FUNCTION BLOCK
1	N/C		
2	N/C		
3	FIL		A
4	N/C		
5	FIL/CATH		A

J4

PIN	SIGNAL	TO/FROM	FUNCTION BLOCK
1	FILAMENT1		A
2	FILAMENT2		A
3	N/C		
4	CATHODE		A
5	N/C		
6	CONT. GRID		A
7	N/C		
8	N/C		
9	N/C		
10	FOCUS		B

NOTES:

1. REFERENCE DESIGNATORS WITHIN THIS ASSEMBLY ARE ABBREVIATED. PREFIX ABBREVIATION WITH ASSEMBLY NUMBER FOR COMPLETE REFERENCE DESIGNATOR.

2. UNLESS OTHERWISE INDICATED:
RESISTANCE IN OHMS (Ω)
CAPACITANCE IN MICROFARADS (uF)
INDUCTANCE IN MICROHENRIES (uH)

Analyzer Repair Info

A1A4/A1A5

A1A4
A1A5 X and Y Deflection Amplifiers, Circuit Description (Serial Number Prefixes: 2403A–3001A)

A1A4 X Deflection Amplifier and A1A5 Y Deflection Amplifier each consists of a differential input state (Q10, Q15) with current source Qll, two current gain stages (Q9, Q14 and Q8, Q13), and two output differential current-to-voltage amplifiers. A display output amplifier provides rear-panel X and Y DISPLAY OUTPUTS.

Current Amplifier (B)

The Current Amplifier transforms an input voltage change to a differential current change at the collectors of Q10 and Q15. This change is amplified in the following current gain stages Q9 and Q14. POSN adjust R7 sets the CRT trace position, and GAIN adjust R27 sets the CRT trace deflection limits.

The collectors of Q8 and Q13 are virtual-ground, current-summing junctions of the output amplifiers. When a signal is applied so as to increase the current in Q8 (decrease in Q13) Q5 conducts more, turning off Q2 and causing the output (collector of Q2) to rise. Current feedback through R29 supplies the increase in current required by Q8. The analogous operation, with inverted polarity, occurs in the other output amplifier.

Current to Voltage Amplifiers (C) (D)

Emitter followers Q7 and Q12 are feedforward amplifiers, coupling the drive signal directly to the bases of Q1 and Q4, thus improving the frequency response. Trimmer capacitors C10 and C11, along with HF GAIN potentiometer R28, adjust the amplifier frequency response for minimum overshoot and equal risetimes (≈70 ns).

An input signal of 0 V to 2 V peak will cause a beam deflection equal to the length of the graticule lines.

Display Output (A)

Display output amplifier U1 provides a 1 V maximum rear-panel signal to the X and Y DISPLAY OUTPUTS.

HP Part Number 85662-60057

A1A4 X Deflection Amp. & A1A5 Y Deflection Amp.

Reference Designation	HP Part Number	C D	Qty	Description	Mfr Code	Mfr Part Number
A1A4	85662-60057	7	1	X DEFLECTION AMPLIFIER BOARD ASSEMBLY (SERIAL PREFIXES: 2403A-3001A)	2848C	85662-60057
A1A5	85662-60057	7	1	Y DEFLECTION AMPLIFIER BOARD ASSEMBLY (SERIAL PREFIXES: 2403A-3001A)	2848C	85662-60057
A1A4C1	0180-0374	3	1	CAPACITOR-FXD 10UF+-10% 20VDC TA	56289	150D106X9020B2-DYS
A1A4C2	0180-0374	3	1	CAPACITOR-FXD 10UF+-10% 20VDC TA	56289	150D106X9020B2-DYS
A1A4C3	0160-4084	8	1	CAP-FXD 0.1uF 50 V	56289	1C20X7R104M050B
A1A4C4	0160-4084	8	1	CAP-FXD 0.1uF 50 V	56289	1C20X7R104M050B
A1A4C5	0160-4084	8	1	CAP-FXD 0.1uF 50 V	56289	1C20X7R104M050B
A1A4C6	0160-4084	8	1	CAP-FXD 0.1uF 50 V	56289	1C20X7R104M050B
A1A4C7	0160-3670	6	1	CAPACITOR-FXD .1UF +-20% 200VDC CER	04222	SR302E104MAAH
A1A4C8	0160-4084	8	1	CAP-FXD 0.1uF 50 V	56289	1C20X7R104M050B
A1A4C9	0160-3533	C	1	CAPACITOR-FXD 470PF +-5% 300VDC MICA 0+7	09023	CD15FD471J03
A1A4C10	0121-0474	C	1	CAP-VAR 3pF 1.5pF 600 V FEP	74970	273-0001-002
A1A4C11	0121-0474	C	1	CAP-VAR 3pF 1.5pF 600 V FEP	74970	273-0001-002
A1A4C12	0160-4182	7	1	CAPACITOR-FXD .01UF +-20% 200VDC CER	04222	SR202C103MAAH
A1A4C13	0160-4182	7	1	CAPACITOR-FXD .01UF +-20% 200VDC CER	04222	SR202C103MAAH
A1A4C14	0160-4182	7	1	CAPACITOR-FXD .01UF +-20% 200VDC CER	04222	SR202C103MAAH
A1A4C15	0160-4182	7	1	CAPACITOR-FXD .01UF +-20% LOOVDC CER	04222	SR202C103MAAH
A1A4C16	0160-3670	6	1	CAPACITOR-FXD .1UF +-20% 200VDC CER	04222	SR302E104MAAH
A1A4C17	3160-3670	6	1	CAPACITOR-FXD .1UF +-20% 200VDC CER	04222	SR302E104MAAH
A1A4C18	0160-4084	8	1	CAP-FXD 0.1uF 50 V	56289	1C20X7R104M050B
A1A4CR1	1901-0040	1	1	DIODE-SWITCHING 30V 50MA 2NS DO-35	71468	
A1A4CR2	1901-0040	1	1	DIDDE-SWITCHING 30V 50MA 2NS DO-35	71468	
A1A4L1	3140-0210	1	1	INDUCTOR RF-CH-MLD 100UH +-5% .166D-INX.	99800	1537-76
A1A4L2	9140-0210	1	1	INDUCTOR RF-CH-MLD 100UH +-5% .166D-INX.	99800	1537-76
A1A4L3	9140-0210	1	1	INDUCTOR RF-CH-MLD 100UH +-5% .166D-INX.	99800	1537-76
A1A4MP1	1200-0185	9	4	INSULATOR-XSTR NYLON	13103	7717-86N RED
A1A4MP2	5000-9043	6	1	'IN-ROLL .062-IN-DIA .25-IN-LG	28480	5000-9043
A1A4MP3	5040-6843	2	1	EXTRACTOR	28480	5040-6843
A1A4MP4	1251-0600	0	2	:DNNECTDR-SGL CONT PIN 1.14-MM-BSC-SZ SQ	27264	16-06-0034
A1A4MP5	1205-0095	0	1	HEAT SINK SGL TO-5/TO-39-CS	13103	22258
A1A4Q1	1853-0232	0	1	TRANSISTOR PNP SI TO-39 PD=1W FT=200MHZ	04713	
A1A4Q2	1854-0523	4	1	TRANSISTOR NPN SI TO-39 PD=1W FT=150MHZ	04713	
A1A4Q3	1854-0523	4	1	TRANSISTOR NPN SI TO-39 PD=1W FT=150MHZ	04713	
A1A4Q4	.853-0232	0	1	TRANSISTOR PNP SI TO-39 PD=1W FT=200MHZ	04713	
A1A4Q5	.853-0007	7	1	TRANSISTOR PNP 2N3251 SI TO-18 PD=360MW	04713	2N3251
A1A4Q6	.853-0007	7	1	TRANSISTOR PNP 2N3251 SI TO-18 PD=360MW	04713	213251
A1A4Q7	.854-0404	D	1	TRANSISTOR NPN SI TO-18 PD=360MW	04713	
A1A4Q8	.854-0404	D	1	TRANSISTOR NPN SI TO-18 PD=360MW	04713	
A1A4Q9	.853-0007	7	1	TRANSISTOR PNP 213251 SI TO-18 PD=360MW	04713	2N3251
A1A4Q10	.853-0007	7	1	'RANSISTOR PNP 2N3251 SI TO-18 PD=360MW	04713	2N3251
A1A4Q11	.853-0007	7	1	'RANSISTOR PNP 2N3251 SI TO-18 PD=360MW	04713	2N3251
A1A4Q12	.854-0404	3	1	'RANSISTOR NPN SI TO-18 PD=360MW	04713	
A1A4Q13	854-0404	3	1	'RANSISTOR NPN SI TO-18 PD=360MW	04713	
A1A4Q14	853-0007	7	1	'RANSISTOR PNP 2N3251 SI TO-18 PD=360MW	04713	2N3251
A1A4Q15	853-0007	7	1	'RANSISTDR PNP 2N3251 SI TO-18 PD=360MW	04713	213251
A1A4R1	1757-0438	3	1	ESISTOR 5.11K +-1% .125W TF TC=0+-100	19701	SFR25H

**Indicates factory-selected value*

HP Part Number 85662-60057

A1 A4 X Deflection Amp. & A1 A5 Y Deflection Amp.

Reference Designatior	HP Part Number	C D	Qty	Description	Mfr Code	Mfr Part Number
A1A4R2	0757-0394	(	1	RESISTOR 51.1 +-1% .125W TF TC=0+-100	19701	SFR25H
A1A4R3	0698-3150	6	1	RESISTOR 2.371: 1% .125W TF TC=0+-100	19701	SFR25H
A1A4R4	0698-3150	6	1	RESISTOR 2.37K 1% .125W TF TC=0+-100	19701	SFR25H
A1A4R5	0698-3155	1	1	RESISTOR 4.641: 1% .125W TF TC=0+-100	19701	SFR25H
A1A4R6	0757-0394	(	1	RESISTOR 51.1 +-1% .125W TF TC=0+-100	19701	SFR25H
A1A4R7	2100-3353	8	1	RESISTOR-TRMR 20K 10% TKF SIDE-ADJ 1-TRN	32997	3386X-Y46-203
A1A4R8	0757-0401	C	1	RESISTOR 100 +-1% .125W TF TC=D+-100	19701	SFR25H
A1A4R9	0757-0401	C	1	RESISTOR 100 +-1% .125W TF TC=0+-100	19701	SFR25H
A1A4R10	0757-0401	C	1	RESISTOR 100 +-1% .125W TF TC=0+-100	19701	SFR25H
A1A4R11	0757-0401	C	1	RESISTOR 100 +-1% .125W TF TC=0+-100	19701	SFR25H
A1A4R12	0757-0428		1	RESISTOR 1.62K +-1% .125W TF TC=0+-100	19701	SFR25H
A1A4R13	0757-0428		1	RESISTOR 1.62K +-1% .125W TF TC=0+-100	19701	SFR25H
A1A4R14	0757-0440	7	1	RESISTOR 7.5K +-1% .125W TF TC=D+-100	19701	SFR25H
A1A4R15	0757-0444	1	1	RESISTOR 12.1K +-1% .125W TF TC=0+-100	19701	SFR25H
A1A4R16	0698-0084	9	1	RESISTOR 2.15K 1% .125W TF TC=0+-100	19701	SFR25H
A1A4R17	0698-0084	9	1	RESISTOR 2.15K 1% .125W TF TC=0+-100	19701	SFR25H
A1A4R18	0698-0084	9	1	RESISTOR 2.15K 1% .125W TF TC=0+-100	19701	SFR25H
A1A4R19	0698-0084	9	1	RESISTOR 2.15K 1% .125W TF TC=0+-100	19701	SFR25H
A1A4R20	0698-3155	1	1	RESISTOR 4.64K 1% .125W TF TC=D+-100	19701	SFR25H
A1A4R21	0757-1094	3	1	RESISTOR 1.47K +-1% .125W TF TC=0+-100	19701	SFR25H
A1A4R22	0757-0460	1	1	RESISTOR 61.9K +-1% .125W TF TC=0+-100	19701	SFR25H
A1A4R23	0757-0460	1	1	7ESISTDR 61.9K +-1% .125W TF TC=0+-100	19701	SFR25H
A1A4R24	1698-3153	3	1	RESISTOR 3.831: 1% .125W TF TC=0+-100	19701	SFR25H
A1A4R25	3698-3153	3	1	RESISTOR 3.831: 1% .125W TF TC=0+-100	19701	SFR25H
A1A4R26	1757-0421	1	1	RESISTOR 825 +-1% .125W TF TC=D+-100	19701	SFR25H
A1A4R27	2100-3273		1	RESISTOR-TRMR 2K 10% TKF SIDE-ADJ 1-TRN	32997	3386X-Y46-202
A1A4R28	1100-3273		1	IESISTDR-TRMR 2K 10% TKF SIDE-ADJ 1-TRN	32997	3386X-Y46-202
A1A4R29	0698-3415	5	1	RESISTOR 19.6K 1% .5W TF TC=0+-100	19701	5053R
A1A4R30	0698-3415	5	1	RESISTOR 19.6K 1% .5W TF TC=0+-100	19701	5053R
A1A4R31	0757-0439		1	RESISTOR 6.81K +-1% .125W TF TC=0+-100	19701	SFR25H
A1A4R32	0757-0439		1	RESISTOR 6.81K +-1% .125W TF TC=0+-100	19701	SFR25H
A1A4R33	0757-0438	3	1	RESISTOR 5.11K +-1% .125W TF TC=0+-100	19701	SFR25H
A1A4R34	0757-0438	3	1	RESISTOR 5.11K +-1% .125W TF TC=0+-100	19701	SFR25H
A1A4R35	0757-0851	4	1	RESISTOR 43.21: +-1% .5W TF TC=0+-100	19701	5053R
A1A4R36	0757-0851	4	1	RESISTOR 43.21: +-1% .5W TF TC=0+-100	19701	5053R
A1A4R37	0757-0346	>	1	RESISTOR 10 +-1% .125W TF TC=0+-100	91637	CMF-55-1, T-1
A1A4R38	1757-0346		1	RESISTOR 10 +-1% .125W TF TC=0+-100	91637	CMF-55-1, T-1
A1A4R39	0757-0346		1	RESISTOR 10 +-1% .125W TF TC=D+-100	91637	CMF-55-1. T-1
A1A4R40	0757-0346		1	RESISTOR 10 +-1% .125W TF TC=0+-100	91637	CMF-55-1, T-1
A1A4R41	0757-0873	)	1	RESISTOR 1.62K +-1% .5W TF TC=0+-100	19701	5053R
A1A4R42	0757-0873		1	RESISTOR 1.62K +-1% .5W TF TC=0+-100	19701	5053R
A1A4R43	1698-3153		1	RESISTOR 3.83K 1% .125W TF TC=0+-100	19701	SFR25H
A1A4R44	0757-0394		1	RESISTOR 51.1 +-1% .125W TF TC=0+-100	19701	SFR25H
A1A4TP1	0360-0535		1	TERMINAL-TEST POINT .330IN ABOVE	46819	
A1A4TP2	0360-0535		1	TERMINAL-TEST POINT .330IN ABOVE	46819	
A1A4TP3	0360-0535		1	TERMINAL-TEST POINT .330IN ABOVE	46819	
A1A4U1	826-0021		1	C OP AMP GP TO-99 PKG	27014	LM310H

**Indicates factory-selected value*

IF-DISPLAY SECTION

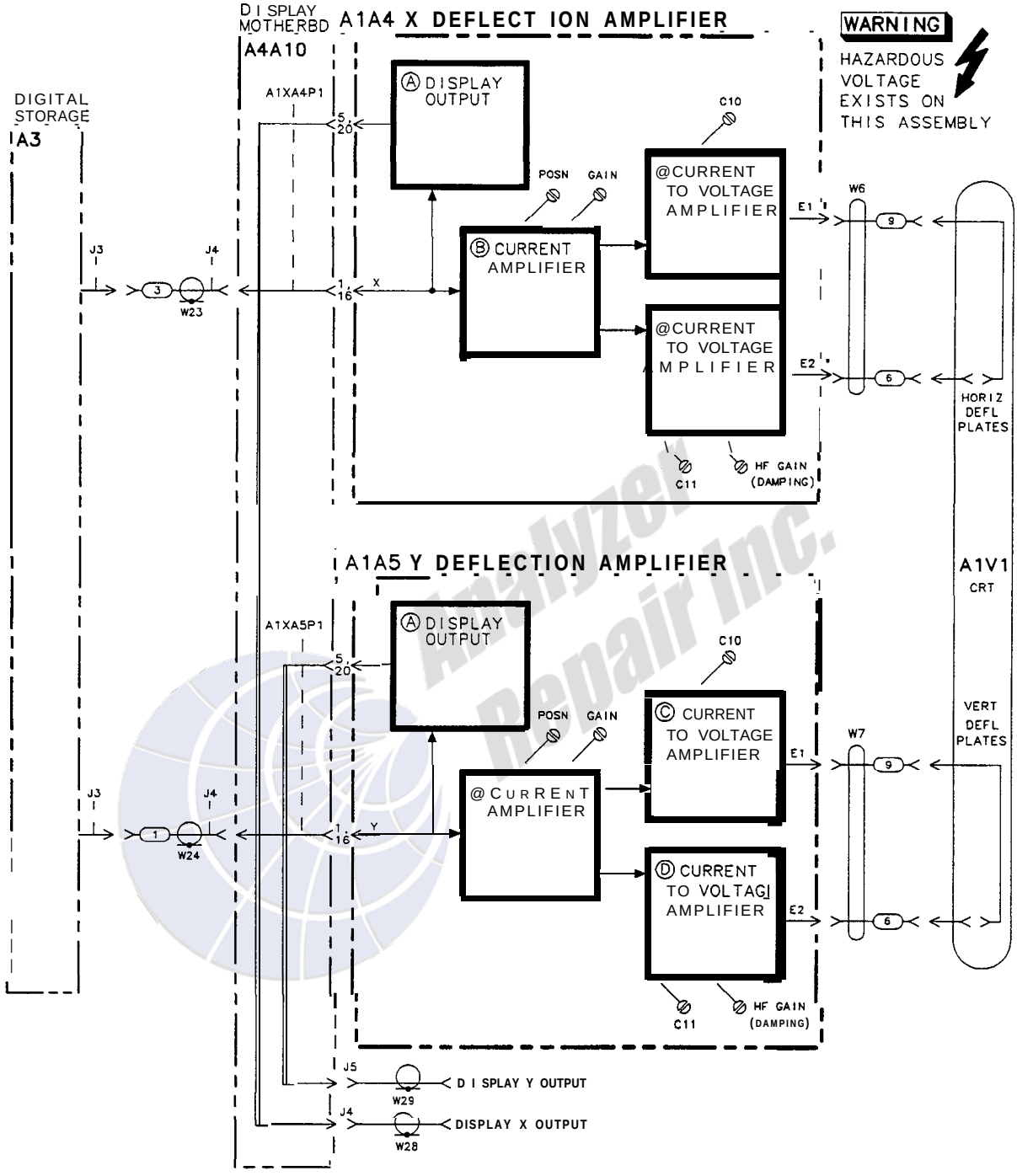

A1A4 X DEFLECTION AMPLIFIER AND A1A5 Y DEFLECTION AMPLIFIER, BLOCK DIAGRAM
(SERIAL NUMBER PREFIXES: 2403A – 3001A)

A1A4 X Deflection Amplifier and A1A5 Y Deflection, Block Diagram

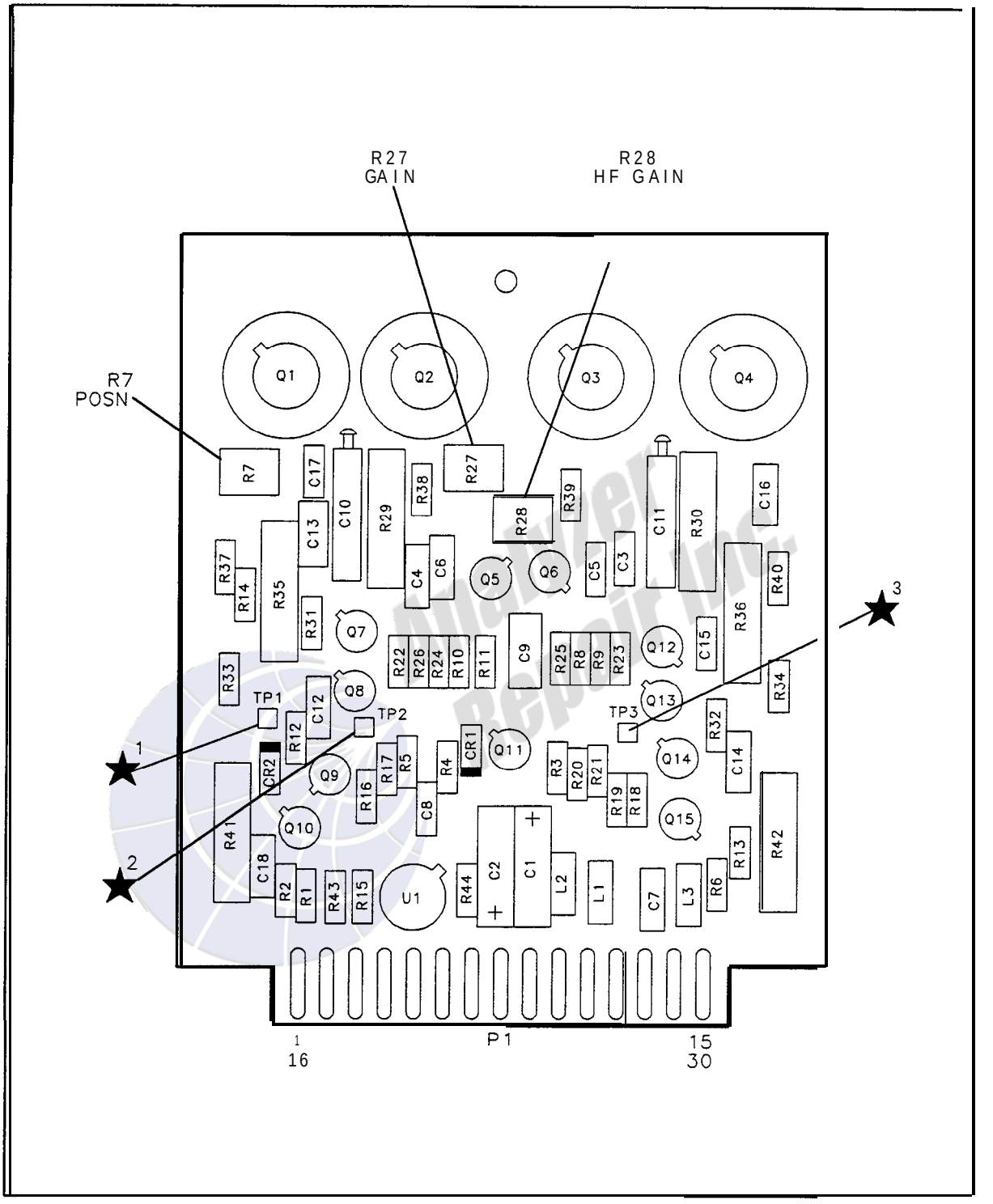

A1A4 X Deflection Amplifier and **A1A5** Y Deflection Amplifier Component Locations, 85662-60057

A1A4 X DEFLECTION AMPLIFIER
A1A5 Y DEFLECTION AMPLIFIER
85662-60057
(SERIAL PREFIXES: 2403A-3001A)

P1

PIN	SIGNAL	TO/FROM	FUNCTION BLOCK
1 16	X(HORIZ)/Y(VERT) INPUT	A3A2P1-5/4	A
2 17	GND GND		E
3 18	NC NC		
4 19	NC NC		
5 20	DISPLAY OUT	REAR PANEL	A
6 21	NC NC		
7 22	-15V SENSE -15V SENSE	A1A6P1-3	E
8 23	GND NC		E
9 24	+15V +15V	A1A6P1-5,23	E
10 25	NC NC		
11 26	NC NC		
12 27	+100V +100V	A1A7P1-12,27	E
13 28	NC NC		
14 29	GND GND		E
15 30	NC NC		

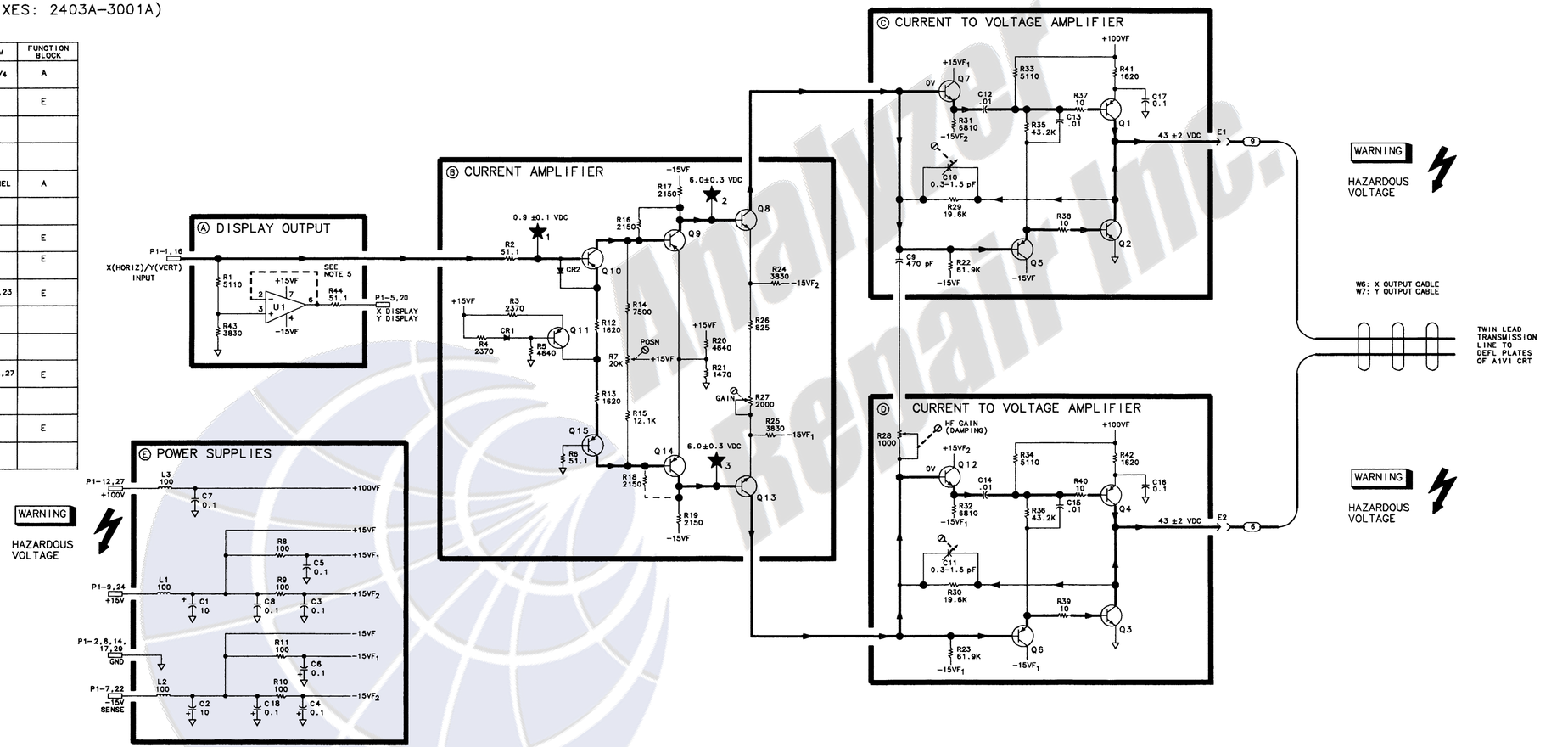

NOTES:

1. REFERENCE DESIGNATORS WITHIN THIS ASSEMBLY ARE ABBREVIATED. FOR COMPLETE REFERENCE DESIGNATION, PREFIX ABBREVIATION WITH ASSEMBLY DESIGNATION.
2. UNLESS OTHERWISE INDICATED:
   RESISTANCE IS IN OHMS (Ω)
   CAPACITANCE IS IN MICROFARADS(μF)
   INDUCTANCE IS IN MICROHENRIES(μH)
3. UNLESS OTHERWISE INDICATED:
   SIGNALS ENTER AT LEFT SIDE OR TOP AND EXIT AT RIGHT SIDE OR BOTTOM OF FUNCTION BLOCKS.
4. DC TEST VOLTAGES ARE VALID WHEN THE FOLLOWING PROGRAM IS KEYED IN:
   INSTRUMENT PRESET
   BLANK TRACE A
   SHIFT LOWER LEFT 0 HZ
   SHIFT UPPER RIGHT
   1090 HZ
   512 HZ
   512 HZ
   1092 HZ
5. INVERTING INPUT (PIN 2) IS INTERNALLY CONNECTED TO OUTPUT (PIN 6).

A1A4
A1A5

A1A4 X DEFLECTION AMPLIFIER AND A1A5 Y DEFLECTION AMPLIFIER, SCHEMATIC DIAGRAM

A1A6/A1A7

A1A6 ±15 V Regulator
A1A6 High Voltage Power Supply
A1A7 +100 V, +5.2 V Regulator

A1A6 ±15 V Regulator (85662-60101), Circuit Description (Serial Number Prefixes: 2403A-3001A)

Warning



Unregulated voltages as high as +150 V are present in the IF-Display Section whenever the power cord is connected to a power source. This condition is annunciated by LED indicator A1A8DS1. Remove the power cord when setting up service procedures.

The IF-Display section is activated by the logic signal HPON (power on), which is connected to the RF Section via wire number 22 of the Instrument Bus. A logic "0" (<+0.8 V) holds the instrument in a standby condition with all unregulated supplies active and the regulated supplies turned off. A logic "1" (>+2.0 V) turns on the regulators and activates the instrument.

A1A6 ±15 V Regulator contains the +15 V Regulator, to which all other supplies are referenced, the -15 V Regulator, a thermal shutdown circuit, and active components necessary for A1A3 High Voltage Regulator to activate the CRT.

Note



Reference is made in the following paragraphs to components in other assemblies: A1A3 High Voltage Regulator and A1A7 $100 V, +5.2 V Regulator. These components are identified by complete reference designations; for example, A1A6Q7.

+15 V Regulator (A)

Q1 and Q2 form a current source from the unregulated (+23 V typical) supply. Under active conditions, this current drives Darlington regulator Q5 on until amplifier U1 senses an equal-voltage condition between voltage reference VR1 (U1 pin 3) and the sense input (U1 pin 2). U1 then holds that regulated condition by shunting the drive current through R4.

Foldback current limiting is provided by Q4 and the voltage divider string on its base. This circuit senses an overcurrent condition (higher voltage across R11, R18) and limits the current to a value proportional to the supply voltage.

Overvoltage crowbar circuit CR4 and associated circuitry shorts the output when an overvoltage condition of approximately +18.5 V is reached. Zener diode CR3 conducts, turning on CR4, which conducts and blows fuse F1.

The regulator circuit can be shut down by turning on Q3, which shunts the source current to ground.

-15 V Regulator (B)

The -15 V Regulator is a tracking supply, holding the -15 V supply to the same magnitude (inverted polarity) as the +15 V supply, through divider resistors R19 and R20. Overvoltage and current limiting circuits are identical to those of the +15 V supply.

Thermal Shutdown (C)

Thermistor R46 (negative temperature coefficient) is mounted to the heat sink of Q5 and Q9. As the heat sink temperature increases to approximately 80°C, the resistance decreases to less than 107 Ω, and the voltage across the bridge circuit in which the thermistor is located changes polarity, causing U4 to go high. This turns on transistors Q3 and A1A7Q2, to shut down all power supplies, and transistor A1A1Q2, to light the front-panel STANDBY indicator. Current feedback through CR6 holds the bridge circuit in an unbalanced condition until the temperature drops to about 55°C, when the increased thermistor resistance again switches the bridge polarity. Q10 turns off the supplies by unbalancing the bridge when its input (HPON) is less than about +2.0 V.

High-Voltage Oscillator (D)

The collector of A1A6Q7 is connected to the primary winding of transformer A1A3T1, and a feedback winding is connected to the base of Q7. Positive feedback from the feedback winding causes the circuit to oscillate at a frequency (approximately 25 to 30 kHz) determined primarily by the inductance and capacitance of T1. Q7 operates as a Class C amplifier, supplying a large current (approximately 2 A peak) over a conduction period of less than one-half cycle.

Oscillator Level Control (E)

Amplifier U3 regulates the dc level of the high-voltage CRT cathode voltage by controlling the base drive to Q7 through the feedback winding. The cathode voltage is sampled via current through A1A3R4, which is compared with a reference current through A1A6R31, R32, and R50 (referenced to the +100 V supply) at the input to U3. The output of U3 then holds the base drive at the level necessary to maintain about -4000 V dc at the cathode of A1V1. Amplifier open loop gain is set by R35, with R34, R36, and Cl4 limiting the control loop bandwidth to approximately 7 Hz.

Cl5 supplies surge current for Q7, and L2 controls the conduction time of Q7. CR15 and CR16 allow U3 to generate self-bias sufficient to maintain level control if the -15 V supply should fail.

Q8 disables the CRT by removing the $100 V reference for the regulator circuit. Q8 is controlled from A4A9 IF Control, which may be addressed via the Instrument Bus.

Analyzer Repair Inc.

A1A6 High Voltage Power Supply (85662060232 and 85662-60250), Circuit Description (Serial Number Prefixes: 3004A and Above)

+15 V Regulator Ⓐ

The +15 V Regulator is the same as the previous version of this board assembly (85662-60101) except that +15 V dc voltage regulated by VR2 was +10 V dc in the previous version. This voltage is always present whenever the 85662A is plugged in. It is used to power the thermal shutdown section Ⓒ and HPON (High=Power On) circuit. The main +15 V is turned off when in thermal shutdown or when HPON is false. Refer to A1A6 ±15 V Regulator for additional information.

-15 V Regulator Ⓑ

The -15 V regulator is identical to the one used on the previous version of this board assembly (85662-60101). Refer to A1A6 ±15 V Regulator for additional information.

Thermal Shutdown Ⓒ

The thermal shutdown and HPON (High=Power On) control section is nearly identical to the previous version of this board assembly (85662-60101). The difference is that R42 and R45 were changed from 6.19 KΩ to 11 KΩ to accommodate the change in power supply voltage from +10 V to +15 V. This change maintains the same voltage threshold for the HPON signal. Comparator U103A is half of a dual comparator. Refer to A1A6 ±15 V Regulator for additional information.

High Voltage Power Supply Ⓓ

The High Voltage Power Supply provides the operating voltages for the CRT. These voltages are: 6.0 V ac for the filament, -2400 V dc for the cathode, +9000 V dc for the post accelerator and approximately 400 V p-p for the A1A3 High Voltage Regulator board to provide dc restoration to the grid and focus signals.

The High Voltage supply is made up of A1A3A1 High Voltage Module interconnected through the A1A3 High Voltage Regulator and the A1A10 Display Motherboard to A1A6 High Voltage Power Supply that contains the +15 V and -15 V power regulators and the drive circuits for the High Voltage Module. The High Voltage Module consists of a transformer that generates the ac voltages and various rectifier and multiplier circuits to produce the dc voltages.

The transformer primary and C106 form a resonant tank circuit at about 30 kHz. Energy is synchronously pumped into the tank circuit from the High Voltage Power Supply Ⓓ and the cathode voltage is fed back from the A1A3 board through A1A3R3 to form a regulated feedback loop (HV FEEDBACK).

The power to run the high voltage supply is pre-regulated by U104, a three terminal regulator, to +18 V dc. This pre-regulation helps save some heat dissipation in the drive portion of the HV supply. U103 supplies the average power for the supply, while C103 and C104 supply much of the pulse of current to pump the resonant tank. U104 goes into current limit at approximately one amp during the pump pulse (peak current about 3 amps) then recharges the C103 and C104 before the next pulse.

L100, R126, and C100 form an input filter. The values of L100 and C100 ensure that the current in L100 is continuous; therefore, the 30 kHz component is minimal in the load current presented to the +23 V unregulated supply. R126 is used to lower the Q of L100 and Cl00 to less than one. This ensures that there will be no ringing at their resonant frequency. L100 is a toroidal inductor to minimize radiated magnetic field.

The synchronous pumping circuit consists of U100, U103B, UlOlA, and Q100 and associated passive components. U100 is a pulse width modulated switching regulator IC. It has a ramp generator and several comparators that can terminate the output pulse that starts at the beginning of the ramp. R118 and C117 determine the slope of the ramp.

U103B is a comparator that observes the ac voltage of the tank circuit formed by C106 and the high voltage transformer primary. When the voltage passes through zero volts from high to low, the output of U103B goes high. This signal is connected to the EXT SYNC input of U100, and causes the ramp to reset and start. Resistors U102A and U102D are not the value, ensuring that the comparator will trigger a ramp at start up (when there is no ac signal in the tank circuit).

The output pulse, **OUT COLLECTOR,** starts at the beginning of the ramp and is terminated by one of several events. The output is an open collector that is pulled to +15 V by R121. This signal is inverted and buffered by UlOlA. UlOlA is able to provide large peak currents to drive the gate capacitance (approximately 1200 pF maximum) of Q100. R122 limits the peak current at the gate and slows the switching time slightly. This protects UlOlA and helps to reduce EMI.

When Q100 is turned on, current begins to flow in L101. L101 is a toroidal inductor to minimize radiated magnetic field. This current builds up during the duration of the output pulse from U100. When the output from U100 is turned off, Q100 is turned off also. Then the current in L101 continues to flow, forward biasing CR103. The current begins to flow into Cl22 and through R120 and back into L101. R120 dissipates most of the stored energy from L101. Cl22 slows the rise time of the voltage into R120 and helps reduce some radiated EMI. The turn off time of Q100 also slows the rise of the voltage into CR103, minimizing EMI.

This shows the ability to sense the downward zero crossing of the sine wave voltage of the tank circuit and pull it down in phase so that energy may be added to the tank. U100 has the ability to control the maximum possible output pulse length. This is done by R110 and R111 and is set so that the pulse is always less than one quarter of the resonant period. This is essential to prevent a gain reversal where longer pulses would begin to subtract energy from the tank once the voltage began to go positive.

The current in L101 is sensed by R124 and is fed back to the **CURRENT LIMITING** input of U100. If the average current rises too high, the output pulse will be cut off. This should only happen in a fault situation and is used primarily for damage control. R124 also provides a test point to observe the currents in L101.

The cathode voltage output from the high voltage power module is sampled by A1A3R3 and is fed to this board as the **HV FEEDBACK** signal. The cathode voltage is approximately -2400 V dc and A1A3R3 is 30 MΩ. HV FEEDBACK comes into a pot R103 and then to a resistor, R102 to +15 V dc. CR100 and CR102 protect the input of U105A in case of arcing in the high voltage section (A1A3) that might cause any excessive voltage on the HV FEEDBACK input. El is a spark gap that is designed in as part of the PC board traces. It should break down at about 1500 V in dry air (less in humidity). Normally, there is only a few volts at El and no leakage should occur.

When the loop is closed, the wiper of R103 will be at about +8.4 V and is connected to the negative input of U105A. The positive input of U105A is tied, through R123, to the +8.4 V reference voltage generated by U100. U105A is an integrator below the frequency of the zero formed by R105 and C112 (112 Hz) and a gain of approximately three above that frequency. U105B is a dc gain stage of approximately four. R108 and R109 provide offset to allow the output of U105B to be near the middle of its power supply rails (0 and +15 V) while the signal meets the input range requirement of U100 pin 5 (MODULATOR). This input compares the ramp to the pin 5 voltage and when the ramp reaches the same voltage as pin 5 the output pulse is terminated.

This is a resistive divider to sample the cathode voltage and compare it to a dc reference. The difference in these voltages drives an integrator, which controls the pulse width of the drive signal. This drive signal injects energy into the primary tank circuit of the high voltage module that generates the cathode voltage. This is a second order loop, which has infinite gain at dc, and the average dc cathode voltage is well-regulated. There is some voltage drop during portions of the CRT refresh cycle that are outside the bandwidth of the control loop, but it is only a few volts and has no effect on the display performance. The individual vectors drawn on the CRT draw beam current for either 4 ms or 19 ms depending on the length of the vector. The filter capacitors on the A1A3 High Voltage Regulator board provide filtering of the cathode supply for the high frequency components of the beam current, while the regulator provides the low frequency average.

This circuit regulates the cathode voltage. The life of the CRT is dependent on filament voltage. It is very important that the filament have the correct voltage and that is held within a narrow range. If the voltage is either too high or too low, the life span of the CRT will be shortened. The filament voltage comes from the same transformer as the high voltage, and there is good correlation between the two for any given high voltage module.

U100 contains a **soft** start feature. The maximum length of the output drive pulse is determined by the voltage at pin **6,** the **DUTY CYCLE** input. This voltage is derived from the internal reference voltage from U100 divided by R110 and R111. As C116 charges on power up, the drive pulse slowly increases in width and the high voltage ramps up slowly. This prevents any large start up power surges. The start up power has a RC time constant of about 400 ms and has a small (5-10 percent) overshoot as the integrator comes off the rail and comes into regulation.

This power supply has a remote On/Off capability. This is activated by a TTL signal from the A4A9 IF Control called **CRT** DSBL (low = HV on). As a safety feature, R114 holds the supply of in the absence of the IF Control assembly. U101B is used as an **invertor** to get the correct polarity signal to operate U100. R116 and R117 attenuate the signal form U101B to an appropriate level for U100.

In order to prevent an 20 kHz noise from radiating to other circuits, a filter network isolates the +15 V dc that is used to power the control section of the HV power supply. L102 and C109 provide a low pass filter and R125 damps the Q of the filter to ensure there will not be any self resonance. The control section of the high voltage power supply does not use the -15 V power supply because if it were to fail, the U105 outputs would rise and turn the high voltage regulator on harder than desired, perhaps causing an over voltage condition on the CRT. If the +15 V supply fails, the drive circuit stops working and the high voltage supply will shut down.

A1A7 +100 V, +5.2 V Regulator, Circuit Description

Serial Number Prefixes 2403A-3001A

A1A7 +100 V, +5.2 V Regulator receives +118 V unregulated and +9 V unregulated inputs from A1A8 Rectifier to provide regulated outputs of +100 V and +5.2 V.

+100 V Regulator Ⓐ

Q7 and associated circuitry form a current source of approximately 3 mA from the unregulated +118 V supply. Under active conditions, this current drives Q8 on until amplifier U2 senses an equal voltage condition between the voltage reference (divider resistors R8 and R9 from the +15 V supply) and the sense input (U2 pin 2). U2 then holds the regulated condition by shunting current through Q4.

The +100 V regulator circuit is shut down by **PWR DWN** going high, turning on Q2, which shunts the source current to ground.

+5.2 V Regulator Ⓑ

The +5.2 V Regulator is similar to the -15 V Regulator in the A1A6 ±15 V Regulator. It is referenced to the +15 V supply and has overvoltage and current limiting circuits similar to those in the -15 V Regulator.

Serial Number Prefixes 3001A and Above

The A1A7 +100 V, +5.2 V Regulator (HP Part Number 85662-60235) is actually a +120 V, +5.2 V regulator. This assembly receives +140 V unregulated and +9 V unregulated inputs from A1A8 Rectifier to provide regulated outputs of +120 V and +5.2 V.

+120 V Regulator Ⓐ

Q7 and associated circuitry form a current source of approximately 3 mA from the unregulated +140 V supply. Under active conditions, this current drives Q8 on until amplifier U2 senses an equal voltage condition between the voltage reference (divider resistors R8 and R9 from the +15 V supply) and the sense input (U2 pin 2). U2 then holds the regulated condition by shunting current through Q4.

This regulator circuit is shut down by **PWR DWN** going high, turning on Q2, which shunts the source current to ground.

CR5 is part of the overvoltage clamp. CR5 in combination with CR4 will clamp the +120 V Regulated output at +129 V.

+5.2 V Regulator Ⓑ

The +5.2 V Regulator is similar to the -15 V Regulator in the A1A6 ±15 V Regulator. It is referenced to the +15 V supply and has overvoltage and current limiting circuits similar to those in the -15 V Regulator.

Analyzer Repair Inc.

IF-Display Section Internal Fuse Replacement

Warning **Remove ac line cord from both instruments before proceeding with this procedure.**



1. Remove feet ① from rear of instrument by removing screws ② shown in view A of Figure 1.
2. Remove top cover from IF-Display Section by loosening screw ③ shown in view A.
3. Remove metal cover from Low Voltage Power Supply section by removing rear screws ④, cable clamp and screw ⑤, and front screws ⑥ shown in view B of Figure 1.
4. The fuses for the +15 V dc, -15 V dc, and HV oscillator are located on the A1A6 ±15 V Regulator and the fuses for the +5.2 V dc and +100 V dc supplies are located on the A1A7 +5.2 V, +100 V Regulator. Locations are shown in View B.

Analyzer Repair Inc.

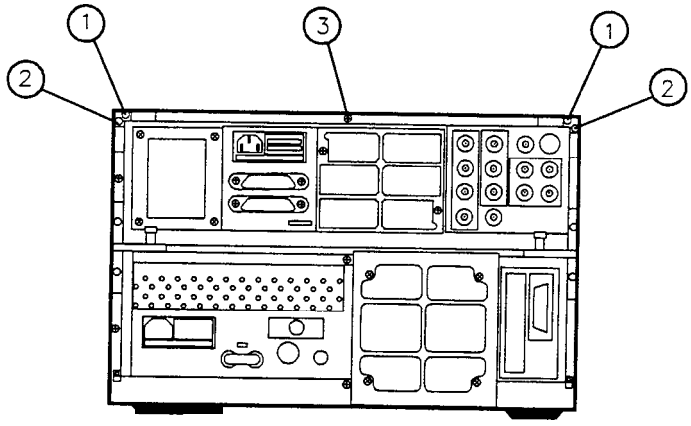

VIEW A

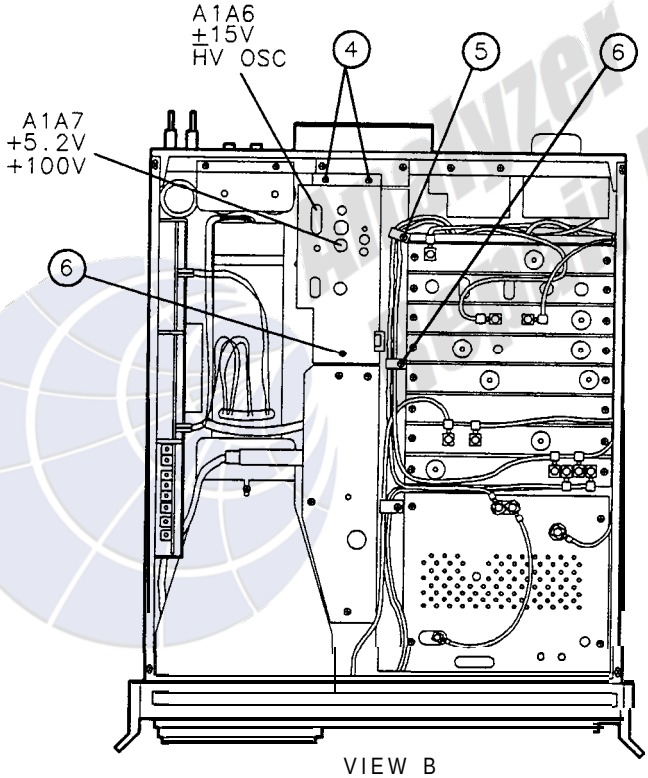

VIEW B

Figure 1. IF-Display Section internal Fuse Replacement

HP Part Number 85662-60101

A1A6 +-15 V Regulator

Reference Designation	HP Part Number	C D	Qty	Description	Mfr Code	Mfr Part Number
A1A6	85662-60101	2	1	+-15VDC REGULATOR BOARD ASSEMBLY (SERIAL PREFIXES: 2403A-3001A)	28480	85662-60101
A1A6C1	0180-2205	3	1	CAPACITOR-FXD .33UF+-10% 35VDC TA	56289	150D334X9035A2-DYS
A1A6C2	0180-0116	1	1	CAPACITOR-FXD 6.8UF+-10% 35VDC TA	56289	150D685X9035B2-DYS
A1A6C3	0160-2199	2	1	CAPACITOR-FXD 30PF +-5% 300VDC MICA -20/	09023	CD15ED300J03
A1A6C4	0180-1746	5	1	CAPACITOR-FXD 15UF+-10% 20VDC TA	56289	150D156X9020B2-DYS
A1A6C5	0180-0228	6	1	CAPACITOR-FXD 22UF+-10% 15VDC TA	56289	150D226X9015B2-DYS
A1A6C6	0180-1746	5	1	CAPACITOR-FXD 15UF+-10% 20VDC TA	56289	150D156X9020B2-DYS
A1A6C7	0180-0197	8	1	CAPACITOR-FXD 2.2UF+-10% 2DVDC TA	56289	150D225X9020A2-DYS
A1A6C8	0160-3456	6	1	CAPACITOR-FXD 1000PF +-10% 1KVDC CER		808-542 X5E 102K
A1A6C9	0160-2199	2	1	CAPACITOR-FXD 30PF +-5% 300VDC MICA -20/	09023	CD15ED300J03
A1A6C10	0180-0291	3	1	CAPACITOR-FXD 1UF+-10% 35VDC TA	56289	150D105X9035A2-DYS
A1A6C11	0180-1746	5	1	CAPACITOR-FXD 15UF+-10% 20VDC TA	56289	150D156X9020B2-DYS
A1A6C12	0180-0141	2	1	CAP-FXD 50uF 50 V AL-ELCTLT	56289	30D506G050DD2-DSM
A1A6C13	0160-0164	7	1	CAPACITOR-FXD .039UF +-10% 200VDC POLYE	84411	HEW-238M
A1A6C14	0160-4084	8	1	CAP-FXD 0.1uF 50 V	56289	1C20X7R104M050B
A1A6C15	0160-0166	9	1	CAPACITOR-FXD .068UF +-10% 200VDC POLYE	84411	HEW-238M
A1A6C16	0160-4084	8	1	CAP-FXD 0.1uF 50 V	56289	1C20X7R104M050B
A1A6C17	0160-4084	8	1	CAP-FXD 0.1uF 50 V	56289	1C20X7R104M050B
A1A6CR2	1901-0033	2	1	DIODE-GEN PRP 180V 200MA DO-35	9N171	1N645
A1A6CR3	1902-3224	1	1	DIODE-ZNR 17.8V 5% DO-35 PD=.4W	04713	
A1A6CR4	1884-0018	5	1	THYRISTDR-SCR 2N4186 VRRM=200	04713	2N4186
A1A6CR6	1901-0033	2	1	DIODE-GEN PRP 180V 200MA DO-35	9N171	1N645
A1A6CR7	1902-3224	1	1	DIODE-ZNR 17.8V 5% DO-35 PD=.4W	04713	
A1A6CR8	1901-0033	2	1	DIODE-GEN PRP 180V 200MA DO-35	9N171	1N645
A1A6CR9	1884-0018	5	1	THYRISTOR-SCR 2N4186 VRRM=200	04713	214186
A1A6CR10	1901-0033	2	1	DIODE-GEN PRP 180V 200MA DO-35	9N171	11645
A1A6CR11	1901-0200	5	1	DIODE-PWR RECT 100V 1.5A	04713	
A1A6CR13	1901-0028	5	1	DIODE-PWR RECT 40DV 750MA DO-29	04713	
A1A6CR14	1901-0028	5	1	DIODE-PWR RECT 40DV 750MA DO-29	04713	
A1A6CR15	1901-0040	1	1	DIODE-SWITCHING 30V 50MA 2NS DO-35	71468	
A1A6CR16	1901-0040	1	1	DIODE-SWITCHING 30V 50MA 2NS DO-35	71468	
A1A6CR17	1902-0556	6	1	DIODE-ZNR 20V 5% PD=1W IR=5UA	04713	
A1A6CR18	1901-0033	2	1	DIODE-GEN PRP 180V 200MA DO-35	9N171	11645
A1A6DS1	1990-0487	7	1	LED-LAMP LUM-INT=2MCD BVR=5V	28480	HLMP-1401
A1A6DS2	1990-0487	7	1	LED-LAMP LUM-INT=2MCD BVR=5V	28480	HLMP-1401
A1A6F1	2110-0083	6	1	FUSE 2.5A 250V NTD FE UL	75915	312 02.5
A1A6F2	2110-0002	9	1	FUSE 2A 25DV NTD FE UL	75915	312 DO2
A1A6F3	2110-0007	4	1	FUSE 1A 250V TD FE UL	75915	313 001
A1A6L1	9140-0171	3	1	INDUCTOR RF-CH-MLD 40UH +-10% .296D-INX.	32159	6-01694
A1A6L2	9100-1641	0	1	INDUCTOR RF-CH-MLD 240UH +-5% .166D-INX.	99800	1537-94
A1A6MP1	4040-0754	1	1	EXTR-PC BD BLU POLYC .062-IN-BD-THKNS 1-		
A1A6MP2	85662-00029	7	1	HEAT SINK	28480	85662-00029
A1A6MP4	1480-0073	6	1	PIN-ROLL .062-IN-DIA .25-IN-LG BE-CU	72962	99-012-062-0250
A1A6MP5	2110-0726	4	6	FUSEHOLDER-CLP-TYP.25D-FUSE	13060	1115-0597T
A1A6MP6	2200-0109	8	2	SCREW-MACH 4-40 .438-IN-LG PAN-HD-PDZI	77250	
A1A6MP7	2200-0107	6	2	SCREW-MACH 4-40 .375-IN-LG PAN-HD-POZI	77250	

**Indicates factory-selected value*

HP Part Number 85662-60101

A1A6 +-15 V Regulator

Reference Designatior	HP Part Number	C D	Qty	Description	Mfr Code	Mfr Part Number
A1A6MP8	3050-0105	6	2	WASHER-FL MTLC ND. 4 .125-IN-ID	78471	
A1A6MP9	0340-1114		3	INSULATOR-XSTR THRM-CNDCT	55285	K-4-05
A1A6MP10	1200-0081	4	2	INSULATOR-FLG-BSHG NYLON	26365	974 307
A1A6MP11	0380-0886	6	4	STANDOFF-RVT-ON .1-IN-LG 4-40-THD	14480	
A1A6MP12				NOT ASSIGNED		
A1A6Q1	1853-0281	9	1	TRANSISTOR PNP 2N2907A SI TO-18 PD=400MW	04713	2N2907A
A1A6Q2	1853-0281	9	1	TRANSISTOR PNP 2N2907A SI TO-18 PD=400MW	04713	2N2907A
A1A6Q3	1854-0477	7	1	TRANSISTOR NPN 2N2222A SI TO-18 PD=500MW	04713	2N2222A
A1A6Q4	1854-0019	.	1	TRANSISTOR NPN SI TO-18 PD=360MW	04713	
A1A6Q5	1854-0611	1	1	TRANSISTOR NPN 2N6055 SI DARL TO-3	04713	2N6055
A1A6Q6	1854-0019	3	1	TRANSISTOR NPN SI TO-18 PD=360MW	04713	
A1A6Q7	1854-0518	7	1	TRANSISTOR NPN 2N5877 SI TO-3 PD=150W	04713	215877
A1A6Q8	1854-0477	7	1	TRANSISTOR NPN 2N2222A SI TO-18 PD=500MW	04713	2N2222A
A1A6Q9	1854-0611	1	1	TRANSISTOR NPN 2N6055 SI DARL TO-3	04713	2N6055
A1A6Q10	1853-0281	9	1	TRANSISTOR PNP 2N2907A SI TO-18 PD=400MW	04713	2N2907A
A1A6R1	0757-0442	9	1	RESISTOR 10K +-1% .125W TF TC=0+-100	19701	SFR25H
A1A6R2	0757-0403	2	1	RESISTOR 121 +-1% .125W TF TC=0+-100	19701	SFR25H
A1A6R3	0757-0394	0	1	RESISTOR 51.1 +-1% .125W TF TC=D+-100	19701	SFR25H
A1A6R4	0698-3150	6	1	RESISTOR 2.37K 1% .125W TF TC=0+-100	19701	SFR25H
A1A6R5	3698-3442	9	1	RESISTOR 237 1% .125W TF TC=0+-100	19701	SFR25H
A1A6R6	0757-1094	9	1	RESISTOR 1.47K +-1% .125W TF TC=0+-100	19701	SFR25H
A1A6R7	0757-0442	9	1	RESISTOR 10K +-1% .125W TF TC=0+-100	19701	SFR25H
A1A6R8	3698-3247	2	1	7ESISTOR 4.53K .25% .125W TF TC=0+-50	19701	5033R
A1A6R9	2100-3095	5	1	IESISTOR-TRMR 200 10% TKF SIDE-ADJ 17-TR	73138	89PR200
A1A6R10	0698-6835	0	1	RESISTOR 3.16K +-0.5% .125W TF TC=0+-50	19701	5033R
A1A6R11	0811-1669	0	1	RESISTOR 1.8 +-5% 2W PWI TC=D+-400	11502	SPH
A1A6R12	0757-0280	3	1	RESISTOR 1K +-1% .125W TF TC=0+-100	19701	SFR25H
A1A6R13	0757-0424	7	1	RESISTOR 1.1K +-1% .125W TF TC=0+-100	19701	SFR25H
A1A6R14	0683-0275	9	1	RESISTOR 2.7 5% .25W CF TC=D-400	2M627	R-25J
A1A6R15	1698-3444	1	1	RESISTOR 316 1% .125W TF TC=0+-100	19701	SFR25H
A1A6R16	0757-0346	2	1	RESISTOR 10 +-1% .125W TF TC=0+-100	91637	CMF-55-1, T-l
A1A6R17	0757-0317	7	1	RESISTOR 1.33K +-1% .125W TF TC=0+-100	19701	SFR25H
A1A6R18	0811-1669	0	1	RESISTOR 1.8 +-5% 2W PWI TC=0+-400	11502	SPH
A1A6R19	0698-7794	2	1	RESISTOR 10K +-0.25% .125W TF TC=0+-100	19701	5033R
A1A6R20	0698-7794	2	1	LESISTOR 10K +-0.25% .125W TF TC=0+-100	19701	5033R
A1A6R21	0698-3444	1	1	RESISTOR 316 1% .125W TF TC=0+-100	19701	SFR25H
A1A6R22	0757-0418	9	1	RESISTOR 619 +-1% .125W TF TC=0+-100	19701	SFR25H
A1A6R23	0757-0346	2	1	RESISTOR 10 +-1% .125W TF TC=0+-100	91637	CMF-55-1, T-l
A1A6R24	0757-0276	7	1	RESISTOR 61.9 +-1% .125W TF TC=0+-100	19701	SFR25H
A1A6R25	0757-0418	9	1	RESISTOR 619 +-1% .125W TF TC=0+-100	19701	SFR25H
A1A6R26	0757-0442	9	1	RESISTOR 10K +-1% .125W TF TC=0+-100	19701	SFR25H
A1A6R27	3757-0317	7	1	RESISTOR 1.33K +-1% .125W TF TC=0+-100	19701	SFR25H
A1A6R28	3811-1661	2	1	RESISTOR .39 +-5% 2W PWI TC=0+-800	11502	SPH
A1A6R29	0683-0275	9	1	RESISTOR 2.7 5% .25W CF TC=0-400	2M627	R-25J
A1A6R30	0757-0280	3	1	RESISTOR 1K +-1% .125W TF TC=0+-100	19701	SFR25H
A1A6R31	0698-3243	8	1	RESISTOR 178K 1% .125W TF TC=0+-100	19701	SFR25H
A1A6R32	2100-3054	6	1	RESISTOR-TRMR 50K 10% TKF SIDE-ADJ 17-TR	73138	89PR50K
A1A6R33	1757-0465	6	1	RESISTOR 100K +-1% .125W TF TC=0+-100	19701	SFR25H

**Indicates factory-selected value*

HP Part Number 85662-60101

A1A6 +-15 V Regulator

Reference Designation	HP Part Number	C D	Qty	Description	Mfr Code	Mfr Part Number
A1A6R34	0757-0465		1	RESISTOR 100K +-1% .125W TF TC=0+-100	19701	SFR25H
A1A6R35	0683-2265		1	RESISTOR 22M 5% .25W CC TC=-900/+1200	01121	CB2265
A1A6R36	0698-3459		1	RESISTOR 383K 1% .125W TF TC=0+-100	19701	SFR25H
A1A6R37	0757-0403		1	RESISTOR 121 +-1% .125W TF TC=0+-100	19701	SFR25H
A1A6R38	0698-3446		1	RESISTOR 383 1% .125W TF TC=0+-100	19701	SFR25H
A1A6R39	0757-0442		1	RESISTOR 10K +-1% .125W TF TC=0+-100	19701	SFR25H
A1A6R40	0757-0442		1	RESISTOR 10K +-1% .125W TF TC=0+-100	19701	SFR25H
A1A6R41	0698-3446		1	RESISTOR 383 1% .125W TF TC=0+-100	19701	SFR25H
A1A6R42	0757-0290		1	RESISTOR 6.19K +-1% .125W TF TC=0+-100	19701	SFR25H
A1A6R43	0698-4405		1	RESISTOR 107 +-1% .125W TF TC=0+-100	91637	CMF-55-1. T-1
A1A6R44	0757-1094		1	RESISTOR 1.47K +-1% .125W TF TC=0+-100	19701	SFR25H
A1A6R45	0757-0290		1	RESISTOR 6.19K +-1% .125W TF TC=0+-100	19701	SFR25H
A1A6R46	0837-0126		1	THERMISTOR DISC 1K-OHM TC=-4.4%/C-DEG		STD-0163
A1A6R48	0698-3154		1	RESISTOR 4.221: 1% .125W TF TC=0+-100	19701	SFR25H
A1A6R49	0757-0816		1	RESISTOR 681 +-1% .5W TF TC=0+-100	19701	5053R
A1A6R50	0757-0462		1	RESISTOR 75K +-1% .125W TF TC=0+-100	19701	SFR25H
A1A6R51	0757-0442		1	RESISTOR 10K +-1% .125W TF TC=0+-100	19701	SFR25H
A1A6R52	0757-0442		1	RESISTOR 10K +-1% .125W TF TC=0+-100	19701	SFR25H
A1A6TP1	1251-0600		1	CONNECTOR-SGL CONT PIN 1.14-MM-BSC-SZ SQ	27264	16-06-0034
A1A6TP2	1251-0600		1	CONNECTOR-SGL CONT PIN 1.14-MM-BSC-SZ SQ	27264	16-06-0034
A1A6TP3	1251-0600		1	CONNECTOR-SGL CONT PIN 1.14-MM-BSC-SZ SQ	27264	16-06-0034
A1A6TP4	1251-0600		1	CONNECTOR-SGL CONT PIN 1.14-MM-BSC-SZ SQ	27264	16-06-0034
A1A6TP5	1251-0600		1	CONNECTOR-SGL CONT PIN 1.14-MM-BSC-SZ SQ	27264	16-06-0034
A1A6TP6	1251-0600		1	CONNECTOR-SGL CONT PIN 1.14-MM-BSC-SZ SQ	27264	16-06-0034
A1A6TP7	1251-0600		1	CONNECTOR-SGL CONT PIN 1.14-MM-BSC-SZ SQ	27264	16-06-0034
A1A6U1	1820-0223		1	IC OP AMP GP TO-99 PKG	27014	LM301AH
A1A6U2	1820-0223		1	IC OP AMP GP TO-99 PKG	27014	LM301AH
A1A6U3	1826-0167		1	IC OP AMP PRGMBL TO-99 PKG	34371	CA3094AT
A1A6U4	1826-0026		1	IC COMPARATOR PRCN TO-99 PKG	27014	LM311H
A1A6VR1	1902-0686		1	DIODE-ZNR 6.2V 2% DO-7 PD=.4W TC=+.002%	04713	11825
A1A6VR2	1902-0554		1	DIODE-ZNR 10V 5% PD=1W IR=10UA	04713	
A1A6VR3	1902-3263		1	DIODE-ZNR 24.9V 2% DO-35 PD=.4W	04713	

**Indicates factory-selected value*

HP Part Number 85662-60232

A1A6 High Voltage Power Supply

Reference Designation	HP Part Number	CD	Qty	Description	Mfr Code	Mfr Part Number
A1A6	85662-60232	0	1	HIGH VOLTAGE POWER SUPPLY BOARD ASSEMBLY (SERIAL PREFIX: 3014A)	28480	85662-60232
A1A6C2	0180-3705	3	1	CAP-FXD 0.33uF 35 V TA	04200	150D334X9035A2-DYS
A1A6C3	0160-5271	1	1	CAP-FXD 6.8uF 35 V TA	04200	150D685X9035B2-DYS
			1	CAP-FXD 30pF 100 V	02010	SA102A300JAAH
A1A6C4	0180-1746	5	1	CAP-FXD 15uF 20 V TA	04200	150D156X9020B2-DYS
A1A6C5	0180-0228	6	1	CAP-FXD 22uF 15 V TA	04200	150D226X9015B2-DYS
A1A6C7	0180-1746	5	1	CAP-FXD 15uF 20 V TA	04200	150D156X9020B2-DYS
A1A6C8	0180-0197	8	1	CAP-FXD 2.2uF 20 V TA	04200	150D225X9020A2-DYS
	0160-4822	2	1	CAP-FXD 1000pF 100 V	02010	SA201A102JAAH
A1A6C10	0160-5271	7	1	CAP-FXD 30pF 100 V	02010	SA102A300JAAH
	0180-0251	3	1	CAP-FXD 1uF 35 V TA	04200	150D105X9035A2-DYS
A1A6C16	0180-1746	5	1	CAP-FXD 15uF 20 V TA	04200	150D156X9020B2-DYS
A1A6C17	0160-4835	7	1	CAP-FXD 0.1uF 50 V	02010	SA115C104KAAH
A1A6C100	0180-4221	7	1	CAP-FXD 0.1uF 50 V	02010	SA115C104KAAH
A1A6C102	0180-3847	1	1	CAP-FXD 47uF 100 V AL-ELCTLT	00493	KMC100VB47RM10X20LL
				CAP-FXD 22uF 25 V TA	04200	299D226X9025DB1
A1A6C103	0180-4221	7	1	CAP-FXD 47uF 100 V AL-ELCTLT	00493	KMC100VB47RM10X20LL
A1A6C104	0180-3847	1	1	CAP-FXD 47uF 100 V AL-ELCTLT	00493	KMC100VB47RM10X20LL
A1A6C106	0160-5583	4	1	CAP-FXD 1uF 160 V POLYP-MET	06127	MKP-10
A1A6C107	0160-4835	7	1	CAP-FXD 0.1uF 50 V	02010	SA115C104KAAH
A1A6C108	0160-4832	4	1	CAP-FXD 0.01uF 100 V	02010	SA101C103KAAH
A1A6C109	0180-3847	1	1	CAP-FXD 22uF 25 V TA	04200	299D226X9025DB1
A1A6C110	0160-4832	4	1	CAP-FXD 0.01uF 100 V	02010	SA101C103KAAH
A1A6C111	0160-0156	7	1	CAP-FXD 3900pF 200 V POLYE-FL	02367	WMC 2D39
A1A6C112	0160-0161	4	1	CAP-FXD 0.01uF 200 V POLYE-FL	02367	WMC2S1
A1A6C113	0160-4822	2	1	CAP-FXD 1000pF 0 V	02010	SA201A102JAAH
A1A6C114	0160-4832	4	1	CAP-FXD 0.01uF 100 V	02010	SA101C103KAAH
A1A6C115	0180-3771	0	1	CAP-FXD 1uF 35 V TA	04200	299D105X9035AB1
A1A6C116	0180-3850	6	1	CAP-FXD 68uF 10 V TA	04200	299D686X9010DB1
A1A6C117	0160-5100	1	1	CAP-FXD 2700pF 100 V	02010	SA301A272JAAH
A1A6C118	0160-4832	4	1	CAP-FXD 0.01uF 100 V	02010	SA101C103KAAH
A1A6C119	0160-4832	4	1	CAP-FXD 0.01uF 100 V	02010	SA101C103KAAH
A1A6C121	0160-4835	7	1	CAP-FXD 0.1uF 50 V	02010	SA115C104KAAH
A1A6C122	0160-4832	4	1	CAP-FXD 0.01uF 100 V	02010	SA101C103KAAH
A1A6CR2	1901-0033	2	1	DIODE-GEN PRP 180V 200MA DO-35	00046	1N645
A1A6CR4	1884-0316	6	1	THYRISTOR-SCR 2N6402 TO-220AB VRRM=200	02037	2N6402
A1A6CR6	1901-0033	2	1	DIODE-GEN PRP 180V 200MA DO-35	00046	1N645
A1A6CR8	1901-0033	2	1	DIODE-GEN PRP 180V 200MA DO-35	00046	1N645
A1A6CR9	1884-0316	6	1	THYRISTOR-SCR 2N6402 TO-220AB VRRM=200	02037	2N6402
A1A6CR10	1901-0033	2	1	DIODE-GEN PRP 180V 200MA DO-35	00046	1N645
A1A6CR11	1901-0200	5	1	DIODE-PWR RECT 100V 1.5A	02037	
A1A6CR18	1901-0033	2	1	DIODE-GEN PRP 180V 200MA DO-35	00046	1N645
A1A6CR100	1901-0376	6	1	DIODE-GEN PRP 35V 50MA DO-35	00046	1N3595
A1A6CR102	1901-0376	6	1	DIODE-GEN PRP 35V 50MA DO-35	00046	1N3595
A1A6CR103	1901-1065	2	1	DIODE-PWR RECT 1N4936 400V 1A 200NS	02037	1N4936
A1A6CR104	1901-1065	2	1	DIODE-PWR RECT 1N4936 400V 1A 200NS	02037	1N4936

Analyzer Repair Inc.

Indicates factory-selected value

HP Part Number 85662-60232
A1A6 High Voltage Power Supply

Reference Designation	HP Part Number	C. D	Qty	Description	Mfr Code	Mfr Part Number
A1A6CR105	1901-1065	4	1	DIODE-PM RECT 1N4936 400V 1A 200NS	02037	1N4936
A1A6DS1	1990-0487	4	1	LED-LAMP LUM-INT=2MCD BVR=5V	01541	HLMP-1401
A1A6DS2	1990-0487	4	1	LED-LAMP LUM-INT=2MCD BVR=5V	01542	HLMP-1401
A1A6F1	2110-0681	0	1	FUSE 2.5A 250V NTD FE IEC	04705	21202.5
A1A6F2	2110-0702	6	1	FUSE 2A 250V NTD FE IEC	02805	GDB-2
A1A6F100	2110-0605	8	1	FUSE .5A 250V NTD FE	04705	217.500
A1A6L100	9140-0736	6	1	INDUCTOR-FIXED L:200 UH MIN @ 0.35 ADC,1	04200	
A1A6L101	9140-1181	7	1	INDUCTOR-FIXED L(AT 10 KHZ): 12UH+-10%	0188E	G6925-A
A1A6L102	9140-0210	1	1	INDUCTOR RF-CH-MLD 100UH +-5% .166D-INX.	03273	15M103J
A1A6MP1				NOT ASSIGNED		
A1A6MP2	4040-0754	1	1	EXTR-PC BD BLU POLYC .062-IN-BD-THKNS 1-	10401	
A1A6MP3	1480-0059	E	1	PIN-ROLL .062-IN-DIA .25-IN-LG STL	04559	52-012-062-0250
A1A6MP4	85662-20044	E	1	HEAT SINK FOR Q5/Q9	2848C	85662-20044
A1A6MP5	0380-0886	6	2	STANDOFF-RVT-ON .1-IN-LG 4-40-THD	02121	
A1A6MP6	1200-0081	4	4	INSULATOR-FLG-BSHG NYLON	03232	
A1A6MP7	2200-0107	6	2	SCREW-MACH 4-40 .375-IN-LG PAN-HD-POZI	01125	
A1A6MP8	2200-0107	6	2	SCREW-MACH 4-40 .375-IN-LG PAN-HD-POZI	01125	
A1A6MP9	3050-0105	6	2	WASHER-FL MTLC NO. 4 .125-IN-ID	04821	
A1A6MP10	0340-1114	1	2	INSULATOR-XSTR THRM-CNDCT	05447	K-4-05
A1A6MP11	5041-7282	7	2	INSULATOR TO-220	28480	5041-7282
A1A6MP12	3050-0890	6	2	WASHER-FL MTLC 2.5 MM 2.78-MM-ID	06691	
A1A6MP13	3515-1548	6	2	SCREW-MACHINE ASSEMBLY M2.5 X 0.45	01125	
A1A6MP14	3340-0949	8	2	INSULATOR-XSTR THRM-CNDCT	02923	60-11-5791-1674
A1A6MP15	3515-0866	9	2	SCREW-MACHINE ASSEMBLY M3 X 0.5 8MM-LG	05610	
A1A6MP16	3535-0025	4	2	NUT-HEX DBL-CHAM M3 X 0.5 2.4MM-THK	06691	
A1A6MP17	3360-1852	6	2	TERMINAL-SLDR LUG PL-MTG FOR-#5-SCR	04880	342-130
A1A6MP18	1515-2051	8	2	SCREW-MACH M3.0 X 6 PAN-HO	01125	
A1A6MP21	1340-0039	7	4	BUSHING-INSULATOR FOR STAND OFF	01075	119-0107-00-0-009
A1A6Q1	1853-0281	9	1	TRANSISTOR PNP 2N2907A SI TO-18 PD=400MW	02037	2N2907A
A1A6Q2	1853-0281	9	1	TRANSISTOR PNP 2N2907A SI TO-18 PD=400MW	02037	2N2907A
A1A6Q3	1854-0477	7	1	TRANSISTOR NPN 2N2222A SI TO-18 PD=500MW	02037	2N2222A
A1A6Q4	1854-0019	3	1	TRANSISTOR NPN SI TO-18 PD=360MW	02037	
A1A6Q5	1854-0611	1	1	TRANSISTOR NPN 2N6055 SI DARL TO-3	02037	2N6055
A1A6Q6	1854-0019	3	1	TRANSISTOR NPN SI TO-18 PD=360MW	02037	
A1A6Q9	1854-0611	1	1	TRANSISTOR NPN 2N6055 SI OARL TO-3	02037	216055
A1A6Q10	1853-0281	9	1	TRANSISTOR PNP 2N2907A SI TO-18 PD=400MW	02037	2N2907A
A1A6Q100	1855-0565	6	1	TRANSISTOR MOSFET N-CHAN E-MODE TO-220 S	02037	MTP10N12
A1A6R1	0757-0442	9	1	RESISTOR 10K +-1% .125W TF TC=0+-100	00746	CRB14 OR CRB25
A1A6R2	0757-0403	2	1	RESISTOR 121 +-1% .125W TF TC=0+-100	00746	CRB14 OR CRB25
A1A6R3	0757-0394	0	1	LESISTOR 51.1 +-1% .125W TF TC=0+-100	00746	CRB14 OR CRB25
A1A6R4	0698-3150	6	1	LESISTOR 2.371: 1% .125W TF TC=0+-100	00746	CRB14 OR CRB25
A1A6R5	0698-3442	9	1	LESISTOR 237 1% .125W TF TC=0+-100	00746	CRB14 OR CRB25
A1A6R6	1757-1094	9	1	LESISTOR 1.47K +-1% .125W TF TC=0+-100	00746	CRB14 OR CRB25
A1A6R7	1757-0442	3	1	LESISTOR 10K +-1% .125W TF TC=0+-100	00746	CRB14 OR CRB25
A1A6R8	0698-3247	2	1	LESISTOR 4.531: .25% .125W TF TC=0+-50	00746	CRB14 OR CRB25
A1A6R9	1100-3095	5	1	RESISTOR-TRMR 200 10% TKF SIDE-ADJ 17-TR	03744	3006P-DM3-201
A1A6R10	0698-6835	3	1	RESISTOR 3.16K +-0.5% .125W TF TC=0+-50	00746	CRB14 OR CRB25
A1A6R11	0811-1669	3	1	RESISTOR 1.8 +-5% 2W PWI TC=0+-400	02499	SPH

**Indicates factory-selected value*

HP Part Number 85662-60232

A1A6 High Voltage Power Supply

Reference Designation	HP Part Number	CD	Qty	Description	Mfr Code	Mfr Part Number
A1A6R12	0757-0280	3	1	RESISTOR 1K +-1% .125W TF TC=0+-100	00746	CRB14 OR CRB25
A1A6R13	0757-0424	7	1	RESISTOR 1.1K +-1% .125W TF TC=0+-100	00746	CRB14 OR CRB25
A1A6R14	0683-0275	9	1	RESISTOR 2.7 5% .25W CF TC=0-400	00746	R-25J
A1A6R15	0698-3444	1	1	RESISTOR 316 1% .125W TF TC=0+-100	00746	CRB14 OR CRB25
A1A6R16	0757-0346	2	1	RESISTOR 10 +-1% .125W TF TC=0+-100	00746	CRB14 OR CRB25
A1A6R17	0757-0317	7	1	RESISTOR 1.33K +-1% .125W TF TC=0+-100	00746	CRB14 OR CRB25
A1A6R18	0811-1669	0	1	RESISTOR 1.8 +-5% 2W PWI TC=0+-400	02499	SPH
A1A6R19	0698-7794	2	1	RESISTOR 10K +-0.25% .125W TF TC=0+-100	00746	CRB14 OR CRB25
A1A6R20	0698-7794	2	1	RESISTOR 10K +-0.25% .125W TF TC=0+-100	00746	CRB14 OR CRB25
A1A6R21	0698-3444	1	1	RESISTOR 316 1% .125W TF TC=0+-100	00746	CRB14 OR CRB25
A1A6R22	0757-0418	9	1	RESISTOR 619 +-1% .125W TF TC=0+-100	00746	CRB14 OR CRB25
A1A6R23	0757-0346	2	1	RESISTOR 10 +-1% .125W TF TC=0+-100	00746	CRB14 OR CRB25
A1A6R24	0757-0276	7	1	RESISTOR 61.9 +-1% .125W TF TC=0+-100	00746	CRB14 OR CRB25
A1A6R25	0757-0418	9	1	RESISTOR 619 +-1% .125W TF TC=0+-100	00746	CRB14 OR CRB25
A1A6R26	0757-0442	9	1	RESISTOR 10K +-1% .125W TF TC=0+-100	00746	CRB14 OR CRB25
A1A6R27	0757-0317	7	1	RESISTOR 1.33K +-1% .125W TF TC=0+-100	00746	CRB14 OR CRB25
A1A6R28	0811-1661	2	1	RESISTOR .39 +-5% 2W PWI TC=0+-800	02499	SPH
A1A6R29	0683-0275	9	1	RESISTOR 2.7 5% .25W CF TC=0-400	00746	R-25J
A1A6R39	0757-0442	9	1	RESISTOR 10K +-1% .125W TF TC=0+-100	00746	CRB14 OR CRB25
A1A6R40	0757-0442	9	1	RESISTOR 10K +-1% .125W TF TC=0+-100	00746	CRB14 OR CRB25
A1A6R41	0698-3446	3	1	RESISTOR 383 1% .125W TF TC=0+-100	00746	CRB14 OR CRB25
A1A6R42	0757-0443	0	1	RESISTOR 11K +-1% .125W TF TC=0+-100	00746	CRB14 OR CRB25
A1A6R43	0698-4405	6	1	RESISTOR 107 +-1% .125W TF TC=0+-100	00746	CRB14 OR CRB25
A1A6R44	0757-1094	9	1	RESISTOR 1.47K +-1% .125W TF TC=0+-100	00746	CRB14 OR CRB25
A1A6R45	0757-0443	0	1	RESISTOR 11K +-1% .125W TF TC=0+-100	00746	CRB14 OR CRB25
A1A6R46	0837-0126	6	1	THERMISTOR DISC 1K-OHM TC=-4.4%/C-DEG	12830	STD-0163
A1A6R48	0698-3154	0	1	RESISTOR 4.221: 1% .125W TF TC=0+-100	00746	CRB14 OR CRB25
A1A6R49	3757-0816	1	1	RESISTOR 681 +-1% .5W TF TC=0+-100	01074	H2
A1A6R100	0698-3442	9	1	RESISTOR 237 1% .125W TF TC=0+-100	00746	CRB14 OR CRB25
A1A6R101	0757-0279	0	1	RESISTOR 3.16K +-1% .125W TF TC=0+-100	00746	CRB14 OR CRB25
A1A6R102	3757-0458	7	1	RESISTOR 51.1K +-1% .125W TF TC=0+-100	00746	CRB14 OR CRB25
A1A6R103	2100-3054	6	1	RESISTOR-TRMR 50K 10% TKF SIDE-ADJ 17-TR	03744	3006P-DM3-503
A1A6R104	0757-0123	3	1	RESISTOR 34.81: +-1% .125W TF TC=0+-100	00746	CRB14 OR CRB25
A1A6R105	3757-0466	7	1	RESISTOR 110K +-1% .125W TF TC=0+-100	00746	CRB14 OR CRB25
A1A6R106	0698-0085	0	1	RESISTOR 2.61K 1% .125W TF TC=0+-100	00746	CRB14 OR CRB25
A1A6R107	0757-0442	9	1	RESISTOR 10K +-1% .125W TF TC=0+-100	00746	CRB14 OR CRB25
A1A6R108	3757-0438	3	1	RESISTOR 5.11K +-1% .125W TF TC=0+-100	00746	CRB14 OR CRB25
A1A6R109	0698-0084	9	1	RESISTOR 2.15K 1% .125W TF TC=0+-100	00746	CRB14 OR CRB25
A1A6R110	0757-0199	3	1	RESISTOR 21.5K +-1% .125W TF TC=0+-100	00746	CRB14 OR CRB25
A1A6R111	0757-0442	9	1	RESISTOR 10K +-1% .125W TF TC=0+-100	00746	CRB14 OR CRB25
A1A6R112	0757-0442	9	1	RESISTOR 10K +-1% .125W TF TC=0+-100	00746	CRB14 OR CRB25
A1A6R113	3757-0280	3	1	RESISTOR 1K +-1% .125W TF TC=0+-100	00746	CRB14 OR CRB25
A1A6R114	3757-0466	7	1	RESISTOR 110K +-1% .125W TF TC=0+-100	00746	CRB14 OR CRB25
A1A6R115	3757-0280	3	1	RESISTOR 1K +-1% .125W TF TC=0+-100	00746	CRB14 OR CRB25
A1A6R116	0757-0442	9	1	RESISTOR 10K +-1% .125W TF TC=0+-100	00746	CRB14 OR CRB25
A1A6R117	3757-0279	0	1	RESISTOR 3.16K +-1% .125W TF TC=0+-100	00746	CRB14 OR CRB25
A1A6R118	3757-0442	9	1	RESISTOR 10K +-1% .125W TF TC=0+-100	00746	CRB14 OR CRB25

**Indicates factory-selected value*

HP Part Number 85662-60232

A1A6 High Voltage Power Supply

Reference Designatior	HP Part Number	C D	Qty	Description	Mfr Code	Mfr Part Number
A1A6R119	0757-0442		1	RESISTOR 10K +-1% .125W TF TC=0+-100	0074t	CRB14 OR CRB25
A1A6R120	0698-3601		1	RESISTOR 10 5% 2W MO TC=0+-200	02491	GS-3
A1A6R121	0757-0280		1	RESISTOR 1K +-1% .125W TF TC=0+-100	0074(	CRB14 OR CRB25
A1A6R122	0757-0402		1	RESISTOR 110 +-1% .125W TF TC=0+-100	0074t	CRB14 OR CRB25
A1A6R123	0757-0467	8	1	RESISTOR 121K +-1% .125W TF TC=0+-100	0074t	CRB14 OR CRB25
A1A6R124	0812-0019	4	1	RESISTOR .33 +-5% 3W PWI TC=0+-90	01854	T2B-79
A1A6R125	0698-8817	4	1	RESISTOR 2.61 +-1% .125W TF TC=0+-100	02995	SFR25H
A1A6R126	0698-8815	(	1	RESISTOR 1.78 +-1% .125W TF TC=0+-100	0299E	SFR25H
A1A6R127	0698-3162	(	1	RESISTOR 46.41: 1% .125W TF TC=0+-100	0074E	CRB14 OR CRB25
A1A6TP1	1251-0600	(	1	CONNECTOR-SGL CONT PIN 1.14-MM-BSC-SZ SQ	0113E	928-196-004140
A1A6TP2	1251-0600	(	1	CONNECTOR-SGL CONT PIN 1.14-MM-BSC-SZ SQ	01136	928-196-004140
A1A6TP3	1251-0600	(	1	CONNECTOR-SGL CONT PIN 1.14-MM-BSC-SZ SQ	0113E	928-196-004140
A1A6TP4	1251-0600	(	1	CONNECTOR-SGL CONT PIN 1.14-MM-BSC-SZ SQ	01136	928-196-004140
A1A6TP100	1251-8427	5	1	CONN-POST TYPE .150-PIN-SPCG 5-CONT	01380	87221-4
A1A6U1	1826-1227	8	1	IC OP AMP GP 8-DIP-C PKG	01698	LM301AJG
A1A6U2	1826-1227	E	1	IC OP AMP GP 8-DIP-C PKG	01698	LM301AJG
A1A6U100	1826-0806	7	1	IC V RGLTR-SWG 18V 16-DIP-P PKG	02910	NE5560N
A1A6U101	1820-4032	7	1	IC-INTERFACE DRVR CMOS PERIPHERAL HIGH	02763	TSC426CPA
A1A6U102	1810-0945	2	1	NETWORK-RES 8-SIP MULTI-VALUE	02483	750-8P-5R
A1A6U103	1826-0412	1	1	IC COMPARATOR PRCN DUAL 8-DIP-P PKG	03406	LM393N
A1A6U104	1826-0393	7	1	IC V RGLTR-ADJ-POS 1.2/37V TO-220 PKG	01698	LM317KC
A1A6U105	1826-0785	1	1	IC OP AMP LOW-BIAS-H-IMPD DUAL 8-DIP-C	01698	TL072ACJG
A1A6VR1	1902-0686	3	1	DIODE-ZNR 6.2V 2% DO-7 PD=.4W TC=+.002%	02037	1N825
A1A6VR2	1902-0202	9	1	DIODE-ZNR 15V 5% PD=1W IR=5UA	02037	
A1A6VR3	1902-3224	1	1	DIODE-ZNR 17.8V 5% DO-35 PD=.4W	02037	
A1A6VR7	1902-3224	1	1	DIODE-ZNR 17.8V 5% DO-35 PD=.4W	02037	
A1A6VR17	1902-0556	6	1	DIODE-ZNR 20V 5% PD=1W IR=5UA	02037	
A1A6XF1	2110-0714	0	1	FUSEHOLDER-BLOCK 2A 250 V 1-FU	06328	OGB 031.8101
A1A6XF2	2110-0714	0	1	FUSEHOLDER-BLOCK 2A 250 V 1-FU	06328	OGB 031.8101
A1A6XF100	2110-0714	0	1	FUSEHOLDER-BLOCK 2A 250 V 1-FU	06328	OGB 031.8101

**Indicates factory-selected value*

HP Part Number 85662060250

A1A6 High Voltage Power Supply

Reference Designation	HP Part Number	C D	Qty	Description	Mfr Code	Mfr Part Number
A1A6	85662-60250	0	1	HIGH VOLTAGE POWER SUPPLY BOARD ASSEMBLY (SERIAL PREFIX: 3026A)	28480	85662-60250
A1A6C1	0180-2205	3	1	CAP-FXD 0.33uF 35 V TA	04200	150D334X9035A2-DYS
A1A6C2	0180-0116	1	1	CAP-FXD 6.8uF 35 V TA	04200	150D685X9035B2-DYS
A1A6C3	0160-5271	7	1	CAP-FXD 30pF 100 V	02010	SA102A300JAAH
A1A6C4	0180-1746	5	1	CAP-FXD 15uF 20 V TA	04200	150D156X9020B2-DYS
A1A6C5	0180-0228	6	1	CAP-FXD 22uF 15 V TA	04200	150D226X9015B2-DYS
A1A6C6	0180-1746	5	1	CAP-FXD 15uF 20 V TA	04200	150D156X9020B2-DYS
A1A6C7	0180-0197	3	1	CAP-FXD 2.2uF 20 V TA	04200	150D225X9020A2-DYS
A1A6C8	0160-4822	7	1	CAP-FXD 1000pF 100 V	02010	SA201A102JAAH
A1A6C9	0160-5271	7	1	CAP-FXD 30pF 100 V	02010	SA102A300JAAH
A1A6C10	0180-0291	3	1	CAP-FXD 1uF 35 V TA	04200	150D105X9035A2-DYS
A1A6C11	0180-1746	5	1	CAP-FXD 15uF 20 V TA	04200	150D156X9020B2-DYS
A1A6C16	0160-4835	7	1	CAP-FXD 0.1uF 50 V	02010	SA115C104KAAH
A1A6C17	0160-4835	7	1	CAP-FXD 0.1uF 50 V	02010	SA115C104KAAH
A1A6C100	0180-4221	7	1	CAP-FXD 47uF 100 V AL-ELCTLT	00493	KMC100VB47RM10X20LL
A1A6C102	0180-3847	1	1	CAP-FXD 22uF 25 V TA	04200	299D226X9025DB1
A1A6C103	0180-4221	7	1	CAP-FXD 47uF 100 V AL-ELCTLT	00493	KMC100VB47RM10X20LL
A1A6C104	0180-4221	7	1	CAP-FXD 47uF 100 V AL-ELCTLT	00493	KMC100VB47RM10X20LL
A1A6C106	0160-5583	4	1	CAP-FXD 1uF 160 V POLYP-MET	06127	MKP-10
A1A6C107	0160-4835	7	1	CAP-FXD 0.1uF 50 V	02010	SA115C104KAAH
A1A6C108	0160-4832	4	1	CAP-FXD 0.01uF 100 V	02010	SA101C103KAAH
A1A6C109	0180-3847	1	1	CAP-FXD 22uF 25 V TA	04200	299D226X9025DB1
A1A6C110	0160-4832	4	1	CAP-FXD 0.01uF 100 V	02010	SA101C103KAAH
A1A6C111	0160-0156	7	1	CAP-FXD 3900pF 200 V POLYE-FL	02367	WMC 2D39
A1A6C112	0160-0161	4	1	CAP-FXD 0.01uF 200 V POLYE-FL	02367	WMC2S1
A1A6C113	0160-4822	2	1	CAP-FXD 1000pF 100 V	02010	SA201A102JAAH
A1A6C114	0160-4832	4	1	CAP-FXD 0.01uF 100 V	02010	SA101C103KAAH
A1A6C115	0180-3771	3	1	CAP-FXD 1uF 35 V TA	04200	299D105X9035AB1
A1A6C116	0180-3850	5	1	CAP-FXD 68uF 10 V TA	04200	299D686X9010DB1
A1A6C117	0160-5100	1	1	CAP-FXD 2700pF 100 V	02010	SA301A272JAAH
A1A6C118	1160-4832	4	1	CAP-FXD 0.01uF 100 V	02010	SA101C103KAAH
A1A6C119	0160-4832	4	1	CAP-FXD 0.01uF 100 V	02010	SA101C103KAAH
A1A6C121	0160-4835	7	1	CAP-FXD 0.1uF 50 V	02010	SA115C104KAAH
A1A6C122	0160-4832	4	1	CAP-FXD 0.01uF 100 V	02010	SA101C103KAAH
A1A6CR2	1901-0033	2	1	DIODE-GEN PRP 180V 200MA DO-35	00046	1N645
A1A6CR4	1884-0316	6	1	THYRISTOR-SCR 216402 TO-220AB VRRM=200	02037	2N6402
A1A6CR6	1901-0033	2	1	DIODE-GEN PRP 180V 200MA DO-35	00046	1N645
A1A6CR8	1901-0033	2	1	DIODE-GEN PRP 180V 200MA DO-35	00046	1N645
A1A6CR9	1884-0316	6	1	THYRISTOR-SCR 2N6402 TO-220AB VRRM=200	02037	2N6402
A1A6CR10	1901-0033	2	1	DIODE-GEN PRP 180V 200MA DO-35	00046	1N645
A1A6CR11	1901-0200	5	1	DIODE-PWR RECT 100V 1.5A	02037	
A1A6CR18	1901-0033	7	1	DIODE-GEN PRP 180V 200MA DO-35	00046	1N645
A1A6CR100	1901-0376	5	1	DIODE-GEN PRP 35V 50MA DO-35	00046	1N3595
A1A6CR102	1901-0376	5	1	DIODE-GEN PRP 35V 50MA DO-35	00046	1N3595
A1A6CR103	1901-1065	2	1	DIODE-PWR RECT 1N4936 400V 1A 200NS	02037	1N4936
A1A6CR104	1901-1065	2	1	DIODE-PWR RECT 1N4936 400V 1A 200NS	02037	1N4936

**Indicates factory-selected value*

HP Part Number 85662-60250

A1A6 High Voltage Power Supply

Reference Designation	HP Part Number	C D	Qty	Description	Mfr Code	Mfr Part Number
A1A6CR105	1901-1065	2	1	DIODE-PWR RECT 1N4936 40DV 1A 200NS	02037	1N4936
A1A6DS1	1990-0487	7	1	LED-LAMP LUM-INT=2MCD BVR=5V	01542	HLMP-1401
A1A6DS2	1990-0487	7	1	LED-LAMP LUM-INT=2MCD BVR=5V	01542	HLMP-1401
A1A6F1	2110-0681	0	1	FUSE 2.5A 250V NTD FE IEC	04703	21202.5
A1A6F2	2110-0702	6	1	FUSE 2A 250V NTD FE IEC	02805	GDB-2
A1A6F100	2110-0605	8	1	FUSE .5A 250V NTD FE	04703	217.500
A1A6L100	9140-0736	6	1	INDUCTOR-FIXED L:200 UH MIN @ 0.35 ADC,1	04200	
A1A6L101	3140-1181	7	1	INDUCTOR-FIXED L(AT 10 KHZ): 12UH+-10%	01886	G6925-A
A1A6L102	9140-0210	1	1	INDUCTOR RF-CH-MLD 100UH +-5% .166D-INX.	03273	15M103J
A1A6MP1				NOT ASSIGNED		
A1A6MP2	4040-0754	1	1	EXTR-PC BD BLU POLYC .062-IN-BD-THKNS 1-	10401	
A1A6MP3	1480-0059	8	1	PIN-ROLL .062-IN-DIA .25-IN-LG STL	04559	52-012-062-0250
A1A6MP4	85662-20044	8	1	HEAT SINK FOR Q5/Q9	28480	85662-20044
A1A6MP5	0380-0886	6	2	STANDOFF-RVT-ON .1-IN-LG 4-40-THD	02121	
A1A6MP6	1200-0081	4	4	INSULATOR-FLG-BSHG NYLON	03232	
A1A6MP7	2200-0107	6	2	SCREW-MACH 4-40 .375-IN-LG PAN-HD-POZI	01125	
A1A6MP8	2200-0107	6	2	SCREW-MACH 4-40 .375-IN-LG PAN-HD-POZI	01125	
A1A6MP9	3050-0105	6	2	WASHER-FL MTLC NO. 4 .125-IN-ID	04821	
A1A6MP10	0340-1114	1	2	INSULATOR-XSTR THRM-CNDCT	05447	K-4-05
A1A6MP11	5041-7282	7	2	INSULATOR TO-220	28480	5041-7282
A1A6MP12	3050-0890	6	2	WASHER-FL MTLC 2.5 MM 2.78-MM-ID	06691	
A1A6MP13	3515-1548	6	2	SCREW-MACHINE ASSEMBLY M2.5 X 0.45	01125	
A1A6MP14	1340-0949	8	2	INSULATOR-XSTR THRM-CNDCT	02923	60-11-5791-1674
A1A6MP15	1515-0866	9	2	SCREW-MACHINE ASSEMBLY M3 X 0.5 8MM-LG	05610	
A1A6MP16	1535-0025	4	2	NUT-HEX DBL-CHAM M3 X 0.5 2.4MM-THK	06691	
A1A6MP17	0360-1852	6	2	TERMINAL-SLDR LUG PL-MTG FOR-#5-SCR	04880	342-130
A1A6MP18	0515-2051	8	2	SCREW-MACH M3.0 X 6 PAN-HD	01125	
A1A6MP21	0340-0039	7	4	BUSHING-INSULATOR FOR STAND OFF	01075	119-0107-00-0-009
A1A6Q1	1853-0281	9	1	TRANSISTOR PNP 2N2907A SI TO-18 PD=400MW	02037	2N2907A
A1A6Q2	1853-0281	9	1	TRANSISTOR PNP 2N2907A SI TO-18 PD=400MW	02037	2N2907A
A1A6Q3	1854-0477	7	1	TRANSISTOR NPN 2N2222A SI TO-18 PD=500MW	02037	2N2222A
A1A6Q4	1854-0019	3	1	TRANSISTOR NPN SI TO-18 PD=360MW	02037	
A1A6Q5	1854-0611	1	1	TRANSISTOR NPN 2N6055 SI DARL TO-3	02037	2N6055
A1A6Q6	1854-0019	3	1	TRANSISTOR NPN SI TO-18 PD=360MW	02037	
A1A6Q9	1854-0611	1	1	TRANSISTOR NPN 2N6055 SI DARL TO-3	02037	2N6055
A1A6Q10	1853-0281	9	1	TRANSISTOR PNP 2N2907A SI TO-18 PD=400MW	02037	2N2907A
A1A6Q100	1855-0565	6	1	TRANSISTOR MOSFET N-CHAN E-MODE TO-220 S	02037	MTP10N12
A1A6R1	1757-0442	9	1	RESISTOR 10K +-1% .125W TF TC=0+-100	00746	CRB14 OR CRB25
A1A6R2	1757-0403	2	1	RESISTOR 121 +-1% .125W TF TC=0+-100	00746	CRB14 OR CRB25
A1A6R3	0757-0394	0	1	RESISTOR 51.1 +-1% .125W TF TC=0+-100	00746	CRB14 OR CRB25
A1A6R4	0698-3150	6	1	RESISTOR 2.37K 1% .125W TF TC=0+-100	00746	CRB14 OR CRB25
A1A6R5	0698-3442	9	1	RESISTOR 237 1% .125W TF TC=0+-100	00746	CRB14 OR CRB25
A1A6R6	0757-1094	9	1	RESISTOR 1.47K +-1% .125W TF TC=0+-100	00746	CRB14 OR CRB25
A1A6R7	0757-0442	9	1	RESISTOR 10K +-1% .125W TF TC=0+-100	00746	CRB14 OR CRB25
A1A6R8	0698-3247	2	1	RESISTOR 4.53K .25% .125W TF TC=0+-50	00746	CRB14 OR CRB25
A1A6R9	2100-3095	5	1	RESISTOR-TRMR 200 10% TKF SIDE-ADJ 17-TR	03744	3006P-DM3-201
A1A6R10	0698-6835	0	1	RESISTOR 3.16K +-0.5% .125W TF TC=0+-50	00746	CRB14 OR CRB25
A1A6R11	0811-1669	0	1	RESISTOR 1.8 +-5% 2W PWI TC=0+-400	02499	SPH

**Indicates factoy-selected value*

HP Part Number 85662-60250

A1A6 High Voltage Power Supply

Reference Designation	HP Part Number	C D	Qty	Description	Mfr Code	Mfr Part Number
A1A6R12	0757-0280	3	1	RESISTOR 1K +-1% .125W TF TC=0+-100	00746	CRB14 OR CRB25
A1A6R13	0757-0424	7	1	RESISTOR 1.1K +-1% .125W TF TC=0+-100	00746	CRB14 OR CRB25
A1A6R14	0683-0275	9	1	RESISTOR 2.7 5% .25W CF TC=0-400	00746	R-25J
A1A6R15	0698-3444	1	1	RESISTOR 316 1% .125W TF TC=0+-100	00746	CRB14 OR CRB25
A1A6R17	0757-0346	2	1	RESISTOR 10 +-1% .125W TF TC=0+-100	00746	CRB14 OR CRB25
A1A6R18	0811-1669	0	1	RESISTOR 1.33K +-1% .125W TF TC=0+-100	00746	CRB14 OR CR825
				RESISTOR 1.8 +-5% 2W PWI TC=0+-400	02499	SPH
A1A6R20	0698-7794	2	1	RESISTOR 10K +-0.25% .125W TF TC=0+-100	00746	CRB14 OR CRB25
A1A6R21	0698-3444	1	1	RESISTOR 10K +-0.25% .125W TF TC=0+-100	00746	CRB14 OR CRB25
			1	RESISTOR 316 1% .125W TF TC=0+-100	00746	CRB14 OR CRB25
A1A6R22	0757-0418	9	1	RESISTOR 619 +-1% .125W TF TC=0+-100	00746	CRB14 OR CRB25
A1A6R23	0757-0346	2	1	RESISTOR 10 +-1% .125W TF TC=0+-100	00746	CRB14 OR CRB25
A1A6R24	0757-0276	7	1	RESISTOR 61.9 +-1% .125W TF TC=0+-100	00746	CRB14 OR CRB25
A1A6R26	0757-0442	9	1	RESISTOR 619 +-1% .125W TF TC=0+-100	00746	CRB14 OR CRB25
A1A6R27	0757-0317	7	1	RESISTOR 10K +-1% .125W TF TC=0+-100	00746	CRB14 OR CRB25
A1A6R28	0811-1661	2	1	RESISTOR 1.33K +-1% .125W TF TC=0+-100	00746	CRB14 OR CRB25
				RESISTOR .39 +-5% 2W PWI TC=0+-800	02499	SPH
A1A6R29	0683-0275	9	1	RESISTOR 2.7 5% .25W CF TC=0-400	00746	R-25J
A1A6R40	0757-0442	9	1	RESISTOR 10K +-1% .125W TF TC=0+-100	00746	CRB14 OR CRB25
			1	RESISTOR 10K +-1% .125W TF TC=0+-100	00746	CR814 OR CRB25
A1A6R42	0698-3446	3	1	RESISTOR 383 1% .125W TF TC=0+-100	00746	CRB14 OR CRB25
	0757-0445	0	1	RESISTOR 11K +-1% .125W TF TC=0+-100	00746	CRB14 OR CRB25
A1A6R44	0757-0898	4	1	RESISTOR 75 +-1% .125W TF TC=0+-100	00746	CRB14 OR CRB25
	0757-1094	9	1	RESISTOR 1.47K +-1% .125W TF TC=0+-100	00746	CRB14 OR CRB25
A1A6R46	0757-0443	8	1	RESISTOR 11K +-1% .125W TF TC=0+-100	00746	CRB14 OR CRB25
	0837-0128	6	1	THERMISTOR DISC 1K-OHM TC=-4.4%/C-DEG	12830	STD-0163
A1A6R48	0698-3154	0	1	RESISTOR 4.22K 1% .125W TF TC=0+-100	00746	CRB14 OR CRB25
A1A6R49	0757-0816	1	1	RESISTOR 681 +-1% .5W TF TC=0+-100	01074	H2
A1A6R101	0698-3442	8	1	RESISTOR 237 1% .125W TF TC=0+-100	00746	CRB14 OR CRB25
A1A6R102	0757-0458	7	1	RESISTOR 3.16K +-1% .125W TF TC=0+-100	00746	CRB14 OR CRB25
A1A6R103	2100-3054	6	1	RESISTOR 51.1K +-1% .125W TF TC=0+-100	00746	CRB14 OR CRB25
				RESISTOR-TRMR 50K 10% TKF SIDE-AOJ 17-TR	03744	3006P-DM3-503
A1A6R105	0757-0123	3	1	RESISTOR 34.8K +-1% .125W TF TC=0+-100	00746	CRB14 OR CRB25
	0757-0466	7	1	RESISTOR 110K +-1% .125W TF TC=0+-100	00746	CRB14 OR CRB25
A1A6R106	0698-0085	0	1	RESISTOR 2.61K 1% .125W TF TC=0+-100	00746	CRB14 OR CRB25
A1A6R107	0757-0442	9	1	RESISTOR 10K +-1% .125W TF TC=0+-100	00746	CRB14 OR CRB25
A1A6R108	0757-0438	3	1	RESISTOR 5.11K +-1% .125W TF TC=0+-100	00746	CRB14 OR CRB25
A1A6R109	0698-0084	9	1	RESISTOR 2.15K 1% .125W TF TC=0+-100	00746	CRB14 OR CRB25
A1A6R110	0757-0199	3	1	RESISTOR 21.5K +-1% .125W TF TC=0+-100	00746	CRB14 OR CRB25
A1A6R111	0757-0442	9	1	RESISTOR 10K +-1% .125W TF TC=0+-100	00746	CRB14 OR CRB25
A1A6R113	0757-0442	9	1	RESISTOR 10K +-1% .125W TF TC=0+-100	00746	CRB14 OR CRB25
	0757-0280	3	1	RESISTOR 1K +-1% .125W TF TC=0+-100	00746	CRB14 OR CRB25
A1A6R114	0757-0466	7	1	RESISTOR 110K +-1% .125W TF TC=0+-100	00746	CRB14 OR CRB25
A1A6R116	0757-0280	3	1	RESISTOR 1K +-1% .125W TF TC=0+-100	00746	CRB14 OR CRB25
	0757-0442	9	1	RESISTOR 10K +-1% .125W TF TC=0+-100	00746	CRB14 OR CRB25
A1A6R117	0757-0279	0	1	RESISTOR 3.16K +-1% .125W TF TC=0+-100	00746	CRB14 OR CRB25
A1A6R118	0757-0442	9	1	RESISTOR 10K +-1% .125W TF TC=0+-100	00746	CRB14 OR CRB25

**Indicates factoy-selected value*

HP Part Number 85662-60250

A1A6 High Voltage Power Supply

Reference Designation	HP Part Number	C D	Qty	Description	Mfr Code	Mfr Part Number
A1A6R119	3757-0442	9	1	RESISTOR 10K +-1% .125W TF TC=0+-100	00746	CRB14 OR CRB25
A1A6R120	3698-3601	2	1	RESISTOR 10 5% 2W MO TC=0+-200	02499	GS-3
A1A6R121	0757-0280	3	1	RESISTOR 1K +-1% .125W TF TC=0+-100	00746	CRB14 OR CRB25
A1A6R122	0757-0402	1	1	RESISTOR 110 +-1% .125W TF TC=0+-100	00746	CRB14 OR CRB25
A1A6R123	0757-0467	8	1	RESISTOR 121K +-1% .125W TF TC=0+-100	00746	CRB14 OR CRB25
A1A6R124	1812-0019	4	1	RESISTOR .33 +-5% 3W PWI TC=0+-90	01854	T2B-79
A1A6R125	1698-8817	2	1	RESISTOR 2.61 +-1% .125W TF TC=0+-100	02995	SFR25H
A1A6R126	1698-8815	0	1	RESISTOR 1.78 +-1% .125W TF TC=0+-100	02995	SFR25H
A1A6R127	0698-3162	0	1	RESISTOR 46.4K 1% .125W TF TC=0+-100	00746	CRB14 OR CRB25
A1A6TP1	1251-0600	0	1	CONNECTOR-SGL CONT PIN 1.14-MM-BSC-SZ SQ	01136	928-196-004140
A1A6TP2	1251-0600	0	1	CONNECTOR-SGL CONT PIN 1.14-MM-BSC-SZ SQ	01136	928-196-004140
A1A6TP3	1251-0600	0	1	CONNECTOR-SGL CONT PIN 1.14-MM-BSC-SZ SQ	01136	928-196-004140
A1A6TP4	1251-0600	0	1	CONNECTOR-SGL CONT PIN 1.14-MM-BSC-SZ SQ	01136	928-196-004140
A1A6TP100	1251-8427	5	1	CONN-POST TYPE .150-PIN-SPCG 5-CONT	01380	87221-4
A1A6U1	1826-1227	E	1	IC OP AMP GP 8-DIP-C PKG	01698	LM301AJG
A1A6U2	1826-1227	E	1	IC OP AMP GP 8-DIP-C PKG	01698	LM301AJG
A1A6U100	1826-0806	7	1	IC V RGLTR-SWG 18V 16-DIP-P PKG	02910	NE5560N
A1A6U101	1820-4032	7	1	IC-INTERFACE DRVR CMOS PERIPHERAL HIGH	02763	TSC426CPA
A1A6U102	1810-0945	2	1	NETWORK-RES 8-SIP MULTI-VALUE	02483	750-8P-5R
A1A6U103	1826-0412	1	1	IC COMPARATOR PRCN DUAL 8-DIP-P PKG	03406	LM393N
A1A6U104	1826-0393	7	1	IC V RGLTR-ADJ-POS 1.2/37V TO-220 PKG	01698	LM317KC
A1A6U105	1826-0785	1	1	IC OP AMP LOW-BIAS-H-IMPD DUAL 8-DIP-C	01698	TL072ACJG
A1A6VR1	1902-0686	3	1	DIODE-ZNR 6.2V 2% DO-7 PD=.4W TC=+.002%	02037	1N825
A1A6VR2	1902-0202	9	1	DIODE-ZNR 15V 5% PD=1W IR=5UA	02037	
A1A6VR3	1902-3224	1	1	DIODE-ZNR 17.8V 5% DO-35 PD=.4W	02037	
A1A6VR7	1902-3224	1	1	DIODE-ZNR 17.8V 5% DO-35 PD=.4W	02037	
A1A6VR17	1902-0556	6	1	DIODE-ZNR 20V 5% PD=1W IR=5UA	02037	
A1A6XF1	1110-0714	0	1	FUSEHOLDER-BLOCK 2A 250 V 1-FU	06328	OGB 031.8101
A1A6XF2	1110-0714	0	1	FUSEHOLDER-BLOCK 2A 250 V 1-FU	06328	OGB 031.8101
A1A6XF100	1110-0714	0	1	FUSEHOLDER-BLOCK 2A 250 V 1-FU	06328	OGB 031.8101

**Indicates factory-selected value*

HP Part Number 85662-60052

Al A7 + 1 OOV, + 5.2V Regulator

Reference Designation	HP Part Number	C D	Qty	Description	Mfr Code	Mfr Part Number
A1A7	85662-60052	2	1	+100V, +5.2V REGULATOR BOARD ASSEMBLY (SERIAL PREFIXES: 2403A-3001A)	28480	85662-60052
A1A7C1	0180-0197	8	1	CAPACITOR-FXD 2.2UF+-10% 20VDC TA	56289	150D225X9020A2-DYS
A1A7C2	0160-3670	6	1	CAPACITOR-FXD .1UF +-20% 200VDC CER	04222	SR302E104MAAH
A1A7C3	0160-2199	2	1	CAPACITOR-FXD 30PF +-5% 300VDC MICA -20/	09023	CD15ED300J03
A1A7C4	0180-0228	6	1	CAPACITOR-FXD 22UF+-10% 15VDC TA	56289	150D226X9015B2-DYS
A1A7C5	0160-2199	2	1	CAPACITOR-FXD 30PF +-5% 300VDC MICA -20/	09023	CD15ED300J03
A1A7C6	0180-0291	3	1	CAPACITOR-FXD 1UF+-10% 35VDC TA	56289	150D105X9035A2-DYS
A1A7C7	0180-0228	6	1	CAPACITOR-FXD 22UF+-10% 15VDC TA	56289	1500226X901582-DYS
A1A7C8	0180-0197	8	1	CAPACITOR-FXD 2.2UF+-10% 20VDC TA	56289	150D225X9020A2-DYS
A1A7C9	0160-3449	7	1	CAP-FXD 2000pF 250 V		805-566 X5R 202K
A1A7C10	0160-4084	8	1	CAP-FXD 0.1uF 50 V	56289	1C20X7R104M050B
A1A7CR1	1901-0050	3	1	DIODE-SWITCHING 80V 200MA 2NS DO-35	9N171	1N4150
A1A7CR2	1901-0050	3	1	DIODE-SWITCHING 80V 200MA 2NS DO-35	9N171	1N4150
A1A7CR3	1901-0033	2	1	DIODE-GEN PRP 180V 200MA DO-35	9N171	1N645
A1A7CR4	1902-0513	5	1	DIODE-ZNR 82.5V 2% DO-15 PD=1W TC=+.082%	04713	
A1A7CR5	1902-3256	9	1	DIODE-ZNR 23.7V 5% DO-35 PD=.4W	04713	
A1A7CR6	1901-0033	2	1	DIODE-GEN PRP 180V 200MA DO-35	9N171	1N645
A1A7CR7	1902-0049	2	1	DIODE-ZNR 6.19V 5% DO-35 PD=.4W	04713	
A1A7CR8	1884-0018	5	1	THYRISTOR-SCR 2N4186 VRRM=200	04713	2N4186
A1A7CR9	1901-0200	5	1	DIODE-PWR RECT 100V 1.5A	04713	
A1A7DS1	1990-0487	7	1	LED-LAMP LUM-INT=2MCD BVR=5V	28480	HLMP-1401
A1A7DS2	1990-0487	7	1	LED-LAMP LUM-INT=2MCD BVR=5V	28480	HLMP-1401
A1A7F1	2110-0010	9	1	FUSE (INCH) 5A 250V NTD FE UL	75915	312 005
A1A7F2	2110-0004	1	1	FUSE .25A 250V NTD FE UL	75915	312.250
A1A7L1	9100-1641	0	1	INDUCTOR RF-CH-MLD 240UH +-5% .166D-INX.	99800	1537-94
A1A7MP1	0340-1150	5	2	INSULATOR-XSTR THRM-CNDCT	55285	K-4-11
A1A7MP2	0380-1602	6	3	STANDOFF-RVT-ON .1-IN-LG 4-40-THD	05791	BR 6905 B-0.100-43
A1A7MP3	1200-0081	4	9	INSULATOR-FLG-BSHG NYLON	26365	974 307
A1A7MP4	1480-0073	6	1	PIN-ROLL .062-IN-DIA .25-IN-LG BE-CU	72962	99-012-062-0250
A1A7MP5	2110-0726	4	4	FUSEHOLDER-CLP-TYP.25D-FUSE	13060	1115-0597T
A1A7MP6	2200-0107	6	1	SCREW-MACH 4-40 .375-IN-LG PAN-HD-POZI	77250	
A1A7MP7	2200-0109	8	3	SCREW-MACH 4-40 .438-IN-LG PAN-HD-POZI	77250	
A1A7MP8	3050-0105	6	1	WASHER-FL MTLC NO. 4 .125-IN-ID	78471	
A1A7MP9	4040-0755	2	1	EXTR-PC BD VIO POLYC .062-IN-BD-THKNS 1-		
A1A7MP10	35662-20046	0	1	HEAT SINK POWER SUPPLY	28480	85662-20046
A1A7MP11	0570-0034	9	2	SCREW-MACH 4-40 .25-IN-LG RD-HD-SLT	26365	
A1A7MP12				NOT ASSIGNED		
A1A7MP13	0340-1114	1	1	INSULATOR-XSTR THRM-CNDCT	55285	K-4-05
A1A7Q1	1854-0404	0	1	TRANSISTOR NPN SI TO-18 PD=360MW	04713	
A1A7Q2	1854-0404	0	1	TRANSISTOR NPN SI TO-18 PD=360MW	04713	
A1A7Q3	1854-0019	3	1	TRANSISTOR NPN SI TO-18 PD=360MW	04713	
A1A7Q4	1854-0523	4	1	TRANSISTOR NPN SI TO-39 PD=1W FT=150MHZ	04713	
A1A7Q5	1854-0019	3	1	TRANSISTOR NPN SI TO-18 PD=360MW	04713	
A1A7Q6	1854-0618	8	1	TRANSISTOR NPN SI DARL TO-3 PD=150W	04713	MJ3000
A1A7Q7	1853-0670	0	1	TRANSISTOR PNP 2N6213 SI TO-66 PD=35W	04713	2N6213
A1A7Q8	1854-0311	8	1	TRANSISTOR NPN 2N4240 SI TO-66 PD=35W	04713	2N4240

**Indicates factory-selected value*

HP Part Number 85662-60052

A1A7 + 100V, +5.2V Regulator

Reference Designation	HP Part Number	C-D	Qty	Description	Mfr Code	Mfr Part Number
A1A7R1	0757-0466	/	1	RESISTOR 110K +-1% .125W TF TC=0+-100	19701	SFR25H
A1A7R2	0757-0442	(	1	RESISTOR 10K +-1% .125W TF TC=0+-100	19701	SFR25H
A1A7R3	0757-0442	0	1	RESISTOR 10K +-1% .125W TF TC=0+-100	19701	SFR25H
A1A7R4	0757-0442	9	1	RESISTOR 10K +-1% .125W TF TC=0+-100	19701	SFR25H
A1A7R5	0698-3440	7	1	RESISTOR 196 1% .125W TF TC=0+-100	19701	SFR25H
A1A7R6	0698-3440	1	1	RESISTOR 196 1% .125W TF TC=0+-100	19701	SFR25H
A1A7R7	0757-0317	1	1	RESISTOR 1.33K +-1% .125W TF TC=0+-100	19701	SFR25H
A1A7R8	0757-0438	3	1	RESISTOR 5.11K +-1% .125W TF TC=0+-100	19701	SFR25H
A1A7R9	0757-0442	9	1	RESISTOR 10K +-1% .125W TF TC=0+-100	19701	SFR25H
A1A7R10	0698-7794	2	1	RESISTOR 10K +-0.25% .125W TF TC=0+-100	19701	5033R
A1A7R11	0698-8417	8	1	RESISTOR 5.3K +-0.25% .125W TF TC=0+-50	19701	5033R
A1A7R12	0757-0418	9	1	RESISTOR 619 +-1% .125W TF TC=0+-100	19701	SFR25H
A1A7R13	0757-0276	7	1	RESISTOR 61.9 +-1% .125W TF TC=0+-100	19701	SFR25H
A1A7R14	3757-0438	3	1	RESISTOR 5.11K +-1% .125W TF TC=0+-100	19701	SFR25H
A1A7R15	0757-0274	5	1	RESISTOR 1.21K +-1% .125W TF TC=0+-100	19701	SFR25H
A1A7R16	3698-3427	0	1	RESISTOR 13.3 1% .125W TF TC=0+-100	91637	CMF-55-1, T-1
A1A7R17	3757-0401	0	1	RESISTOR 100 +-1% .125W TF TC=0+-100	19701	SFR25H
A1A7R18	0812-0066	1	1	RESISTOR .33 +-5% 2W PWI TC=0+-800	11502	SPH
A1A7R19	0698-3444	1	1	RESISTOR 316 1% .125W TF TC=0+-100	19701	SFR25H
A1A7R20	1683-0275	9	1	RESISTOR 2.7 5% .25W CF TC=0-400	2M627	R-25J
A1A7R21	0698-0085	0	1	RESISTOR 2.61K 1% .125W TF TC=0+-100	19701	SFR25H
A1A7R22	0698-3453	2	1	RESISTOR 196K 1% .125W TF TC=0+-100	19701	SFR25H
A1A7R23	0757-0464	5	1	RESISTOR 90.9K +-1% .125W TF TC=0+-100	19701	SFR25H
A1A7R24	0757-0442	9	1	RESISTOR 10K +-1% .125W TF TC=0+-100	19701	SFR25H
A1A7R25	0698-3427	0	1	RESISTOR 13.3 1% .125W TF TC=0+-100	91637	CMF-55-1, T-1
A1A7R26	0757-0444	1	1	RESISTOR 12.1K +-1% .125W TF TC=0+-100	19701	SFR25H
A1A7R27	0757-0418	9	1	RESISTOR 619 +-1% .125W TF TC=0+-100	19701	SFR25H
A1A7R28	0757-0317	7	1	RESISTOR 1.33K +-1% .125W TF TC=0+-100	19701	SFR25H
A1A7R29	0812-0066	1	1	RESISTOR .33 +-5% 2W PWI TC=0+-800	11502	SPH
A1A7TP1	1251-0600	0	1	CONNECTOR-SGL CONT PIN 1.14-MM-BSC-SZ SQ	27264	16-06-0034
A1A7TP2	1251-0600	0	1	CONNECTOR-SGL CONT PIN 1.14-MM-BSC-SZ SQ	27264	16-06-0034
A1A7TP3	1251-0600	0	1	CONNECTOR-SGL CONT PIN 1.14-MM-BSC-SZ SQ	27264	16-06-0034
A1A7TP4	1251-0600	0	1	CONNECTOR-SGL CONT PIN 1.14-MM-BSC-SZ SQ	27264	16-06-0034
A1A7U1	1820-0223	0	1	IC OP AMP GP TO-99 PKG	27014	LM301AH
A1A7U2	1820-0223	0	1	IC OP AMP GP TO-99 PKG	27014	LM301AH

**Indicates factory-selected value*

HP Part Number 85662-60235

A1A7 + 1 OOV, + 5.2V Regulator

Reference Designation	HP Part Number	C D	Qty	Description	Mfr Code	Mfr Part Number
A1A7	85662-60235	3	1	+100V, +5.2V REGULATOR BOARD ASSEMBLY (SERIAL PREFIX: 3004A)	28480	85662-60235
A1A7C1	0180-0197	8	1	CAP-FXD 2.2uF 20 V TA	04200	150D225X9020A2-DYS
A1A7C2	0160-3670	6	1	CAP-FXD 0.1uF 200 V	02010	SR302E104MAAH
A1A7C3	0160-2199	2	1	CAP-FXD 30pF 300 V MICA	02367	CD15ED300J03
A1A7C4	0180-0228	6	1	CAP-FXD 22uF 15 V TA	04200	150D226X9015B2-DYS
A1A7C5	0160-2199	2	1	CAP-FXD 30pF 300 V MICA	02367	CD15ED300J03
A1A7C6	0180-0291	3	1	CAP-FXD 1uF 35 V TA	04200	150D105X9035A2-DYS
A1A7C7	0180-0228	6	1	CAP-FXD 22uF 15 V TA	04200	150D226X9015B2-DYS
A1A7C8	0180-0197	8	1	CAP-FXD 2.2uF 20 V TA	04200	150D225X9020A2-DYS
A1A7C9	0160-3449	7	1	CAP-FXD 2000pF 250 V	06352	CK45XR2E202K-A
A1A7C10	0160-4084	8	1	CAP-FXD 0.1uF 50 V	02010	SR215C104MAAH
A1A7CR1	1901-0050	3	1	DIODE-SWITCHING 80V 200MA 2NS DO-35	00046	1N4150
A1A7CR2	1901-0050	3	1	DIODE-SWITCHING 80V 200MA 2NS DO-35	00046	IN4150
A1A7CR3	1901-0033	2	1	DIODE-GEN PRP 180V 200MA DO-35	00046	1N645
A1A7CR4	1902-0513	5	1	DIODE-ZNR 82.5V 2% DO-15 PD=1W TC=+.082%	02037	
A1A7CR5	1902-1415	8	1	DIODE-ZNR 47V 5% DO-35 PD=.4W TC=+.114%	02037	
A1A7CR6	1901-0033	2	1	DIODE-GEN PRP 180V 200MA DO-35	00046	1N645
A1A7CR7	1902-0049	2	1	DIODE-ZNR 6.19V 5% DO-35 PD=.4W	02037	
A1A7CR8	1884-0018	5	1	THYRISTOR-SCR 2N4186 VRRM=200	28480	1884-0018
A1A7CR9	1901-0200	5	1	DIODE-PWR RECT 100V 1.5A	02037	
A1A7DS1	1990-0487	7	1	LED-LAMP LUM-INT=2MCD BVR=5V	01542	HLMP-1401
A1A7DS2	1990-0487	7	1	LED-LAMP LUM-INT=2MCD BVR=5V	01542	HLMP-1401
A1A7F1	2110-0010	9	1	FUSE (INCH) 5A 250V NTD FE UL	04703	312 005
A1A7F2	2110-0004	1	1	FUSE .25A 250V NTD FE UL	02805	AGC-1/4
A1A7L1	9100-1641	0	1	INDUCTOR RF-CH-MLD 240UH +-5% .166D-INX.	03273	15M243J
A1A7MP1	0340-1150	5	2	INSULATOR-XSTR THRM-CNDCT	05447	K-4-11
A1A7MP2	0380-1602	6	3	STANDOFF-RVT-ON .1-IN-LG 4-40-THD	02121	BR 6905 B-0.100-43
A1A7MP3	1200-0081	4	4	INSULATOR-FLG-BSHG NYLON	03232	
A1A7MP4	1480-0073	6	1	PIN-ROLL .062-IN-DIA .25-IN-LG BE-CU	04559	99-012-062-0250
A1A7MP5	2110-0726	4	4	FUSEHOLDER-CLP-TYP.25D-FUSE	02603	1115-0597T
A1A7MP6	2200-0107	6	1	SCREW-MACH 4-40 .375-IN-LG PAN-HD-POZI	01125	
A1A7MP7	2200-0109	8	3	SCREW-MACH 4-40 .438-IN-LG PAN-HD-PDZI	01125	
A1A7MP8	3050-0105	6	1	WASHER-FL MTLC ND. 4 .125-IN-ID	04821	
A1A7MP9	0340-0039	7	1	BUSHING-INSULATOR FOR STAND OFF	01075	119-0107-00-0-009
A1A7MP10	85662-20046	0	1	HEAT SINK, POWER SUPPLY	28480	85662-20046
A1A7MP11	0570-0034	9	2	SCREW-MACH 4-40 .25-IN-LG RD-HD-SLT	03380	
A1A7MP13	0340-1114	1	1	INSULATOR-XSTR THRM-CNDCT	05447	K-4-05
A1A7Q1	1854-0404	0	1	TRANSISTOR NPN SI TO-18 PD=360MW	02037	
A1A7Q2	1854-0404	0	1	TRANSISTOR NPN SI TO-18 PD=360MW	02037	
A1A7Q3	1854-0019	3	1	TRANSISTOR NPN SI TO-18 PD=360MW	02037	
A1A7Q4	1854-0523	4	1	TRANSISTOR NPN SI TO-39 PD=1W FT=150MHZ	02037	
A1A7Q5	1854-0019	3	1	TRANSISTOR NPN SI TO-18 PD=360MW	02037	
A1A7Q6	1854-0618	8	1	TRANSISTOR NPN SI DARL TO-3 PD=150W	02037	MJ3000
A1A7Q7	1853-0670	0	1	TRANSISTOR PNP 2N6213 SI TO-66 PD=35W	02037	2N6213
A1A7Q8	1854-0311	8	1	TRANSISTOR NPN 2N4240 SI TO-66 PD=35W	02037	2N4240
A1A7R1	0757-0466	7	1	RESISTOR 110K +-1% .125W TF TC=0+-100	00746	CRB14 OR CRB25

**Indicates facto y-selected value*

HP Part Number 85662-60235

Al A7 + 1 OOV, + 5.2V Regulator

Reference Designatior	HP Part Number	C D	Qty	Description	Mfr Code:	Mfr Part Number
A1A7R2	0757-0442		1	RESISTOR 10K +-1% .125W TF TC=0+-100	00741	CRB14 OR CRB25
A1A7R3	0757-0442		1	RESISTOR 10K +-1% .125W TF TC=0+-100	00741	CRB14 OR CRB25
A1A7R4	0757-0442		1	RESISTOR 10K +-1% .125W TF TC=0+-100	00741	CRB14 OR CRB25
A1A7R5	0698-3440		1	RESISTOR 196 1% .125W TF TC=0+-100	0074t	CRB14 OR CRB25
A1A7R6	0698-3440		1	RESISTOR 196 1% .125W TF TC=0+-100	0074t	CRB14 OR CRB25
A1A7R7	0757-0317		1	RESISTOR 1.33K +-1% .125W TF TC=0+-100	00741	CRB14 OR CRB25
A1A7R8	0757-0438		1	RESISTOR 5.11K +-1% .125W TF TC=0+-100	00741	CRB14 OR CRB25
A1A7R9	0757-0442		1	RESISTOR 10K +-1% .125W TF TC=0+-100	0074t	CRB14 OR CRB25
A1A7R10	0698-7794		1	RESISTOR 10K +-0.25% .125W TF TC=0+-100	00741	CRB14 OR CRB25
A1A7R11	0698-8417		1	RESISTOR 5.3K +-0.25% .125W TF TC=0+-50	00741	CRB14 OR CRB25
A1A7R12	0757-0418		1	RESISTOR 619 +-1% .125W TF TC=0+-100	00742	CRB14 OR CRB25
A1A7R13	0757-0276		1	RESISTOR 61.9 +-1% .125W TF TC=0+-100	00741	CRB14 OR CRB25
A1A7R14	0757-0438		1	RESISTOR 5.11K +-1% .125W TF TC=0+-100	00741	CRB14 OR CRB25
A1A7R15	0757-0274		1	RESISTOR 1.21K +-1% .125W TF TC=0+-100	0074E	CRB14 OR CRB25
A1A7R16	0698-3427		1	RESISTOR 13.3 1% .125W TF TC=0+-100	0074E	CRB14 OR CRB25
A1A7R17	0757-0401		1	RESISTOR 100 +-1% .125W TF TC=0+-100	00741	CRB14 OR CRB25
A1A7R18	0812-0066		1	RESISTOR .33 +-5% 2W PWI TC=0+-800	02499	SPH
A1A7R19	0698-3444		1	RESISTOR 316 1% .125W TF TC=0+-100	00741	CRB14 OR CRB25
A1A7R20	0683-0275		1	RESISTOR 2.7 5% .25W CF TC=0-400	00746	R-25J
A1A7R21	0698-0085		1	RESISTOR 2.61K 1% .125W TF TC=0+-100	00746	CRB14 OR CRB25
A1A7R22	0698-3453		1	RESISTOR 196K 1% .125W TF TC=0+-100	00746	CRB14 OR CRB25
A1A7R23	0757-0466		1	RESISTOR 110K +-1% .125W TF TC=0+-100	00746	CRB14 OR CRB25
A1A7R24	0757-0442		1	RESISTOR 10K +-1% .125W TF TC=0+-100	00746	CRB14 OR CRB25
A1A7R25	0698-3427		1	RESISTOR 13.3 1% .125W TF TC=0+-100	00746	CRB14 OR CRB25
A1A7R26	0757-0444		1	RESISTOR 12.1K +-1% .125W TF TC=0+-100	00746	CRB14 OR CRB25
A1A7R27	0757-0418		1	RESISTOR 619 +-1% .125W TF TC=0+-100	00746	CRB14 OR CRB25
A1A7R28	0757-0317		1	RESISTOR 1.33K +-1% .125W TF TC=0+-100	00746	CRB14 OR CRB25
A1A7R29	3812-0066		1	RESISTOR .33 +-5% 2W PWI TC=0+-BOO	02499	SPH
A1A7TP1	1251-0600		1	CONNECTOR-SGL CONT PIN 1.14-MM-BSC-SZ SQ	01136	928-196-004140
A1A7TP2	1251-0600		1	CONNECTOR-SGL CDNT PIN 1.14-MM-BSC-SZ SQ	01136	928-196-004140
A1A7TP3	1251-0600		1	CONNECTOR-SGL CONT PIN 1.14-MM-BSC-SZ SQ	01136	928-196-004140
A1A7TP4	1251-0600		1	CONNECTOR-SGL CDNT PIN 1.14-MM-BSC-SZ SQ	01136	928-196-004140
A1A7U1	1826-1227		1	IC OP AMP GP 8-DIP-C PKG	01698	LM301AJG
A1A7U2	1826-1227		1	IC OP AMP GP 8-DIP-C PKG	01698	LM301AJG

Indicates facto y-selected value

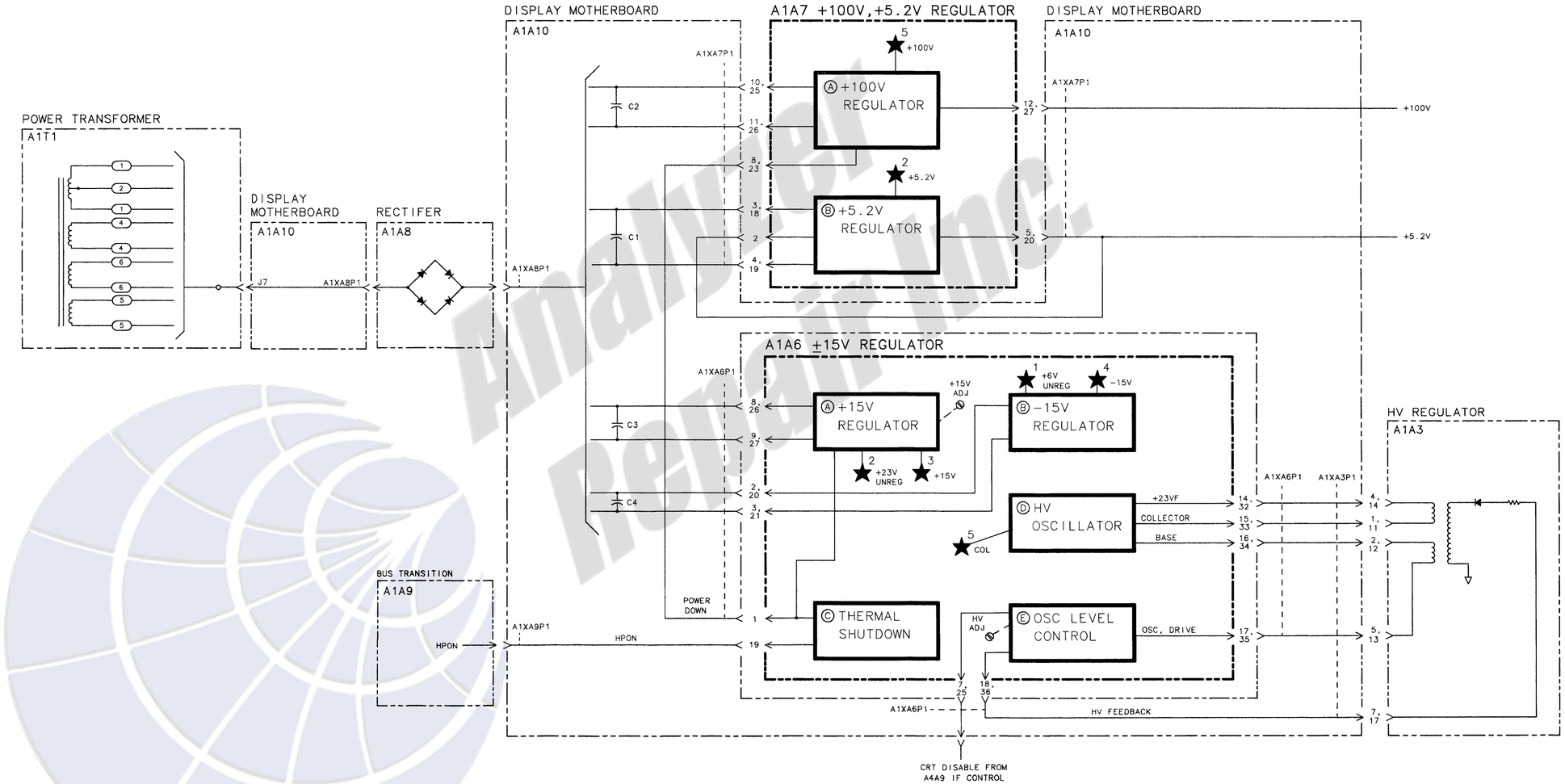

A1A6 ±15V REGULATOR AND A1A7 +100V, +5.2V REGULATOR, BLOCK DIAGRAM
(SERIAL NUMBER PREFIX: 2403A-3001A)

Analyzer Repair Inc.

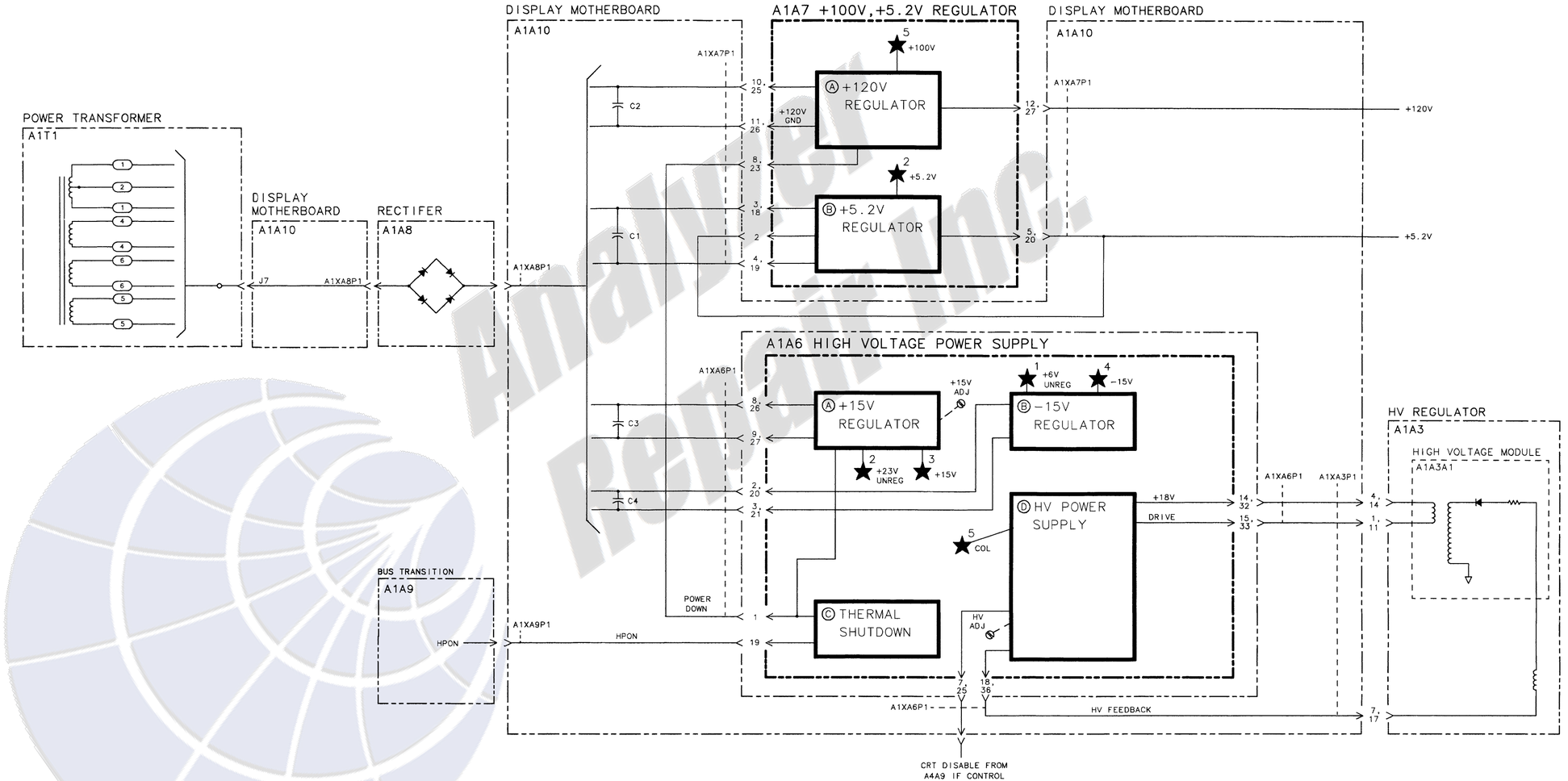

A1A6 HIGH VOLTAGE POWER SUPPLY AND A1A7 +100V, +5.2V REGULATOR, BLOCK DIAGRAM
(SERIAL NUMBER PREFIX: 3004A AND ABOVE)

Analyzer Repair Inc.

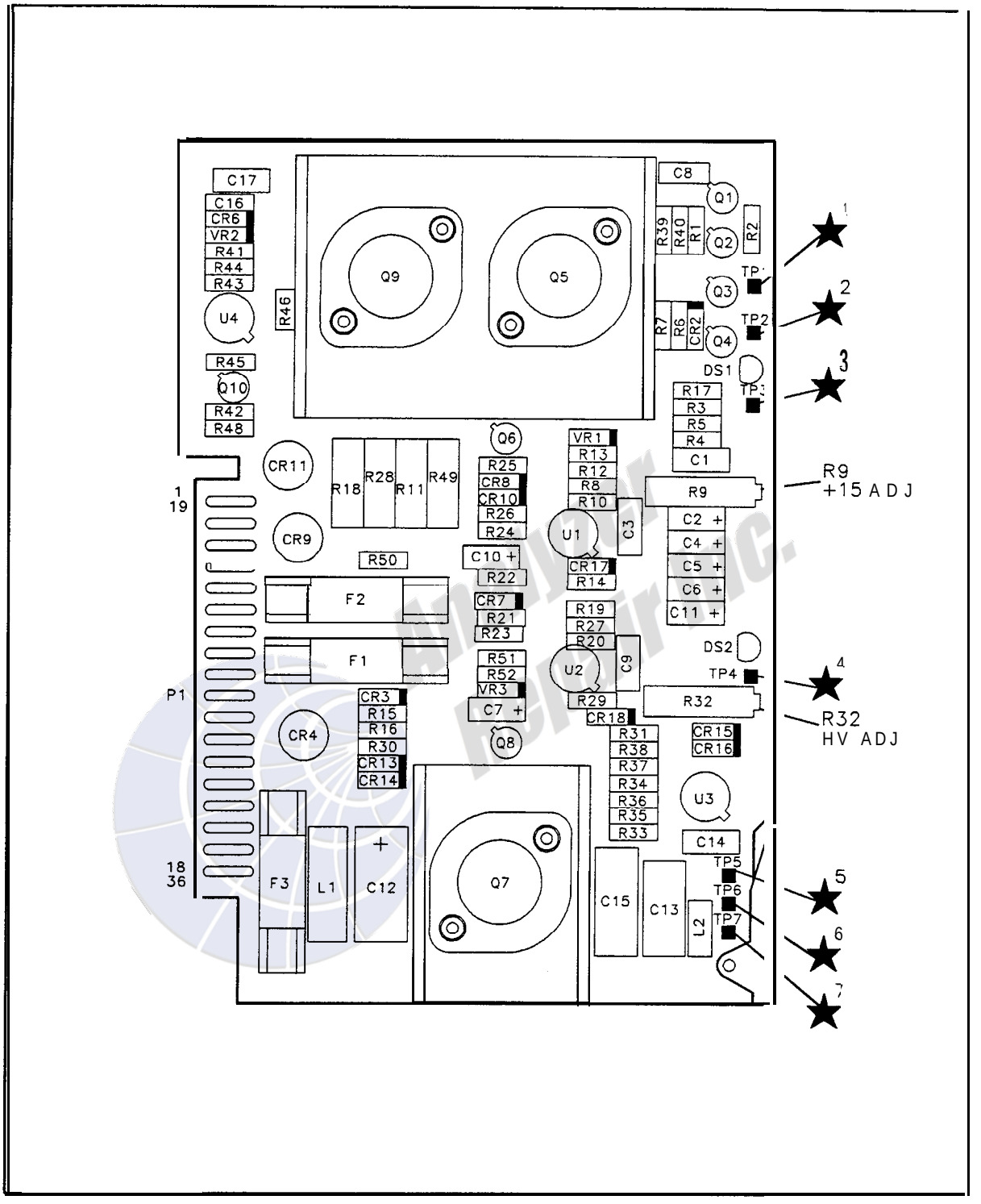

A1A6 ±15 V Regulator Component Locations, 85662-60101

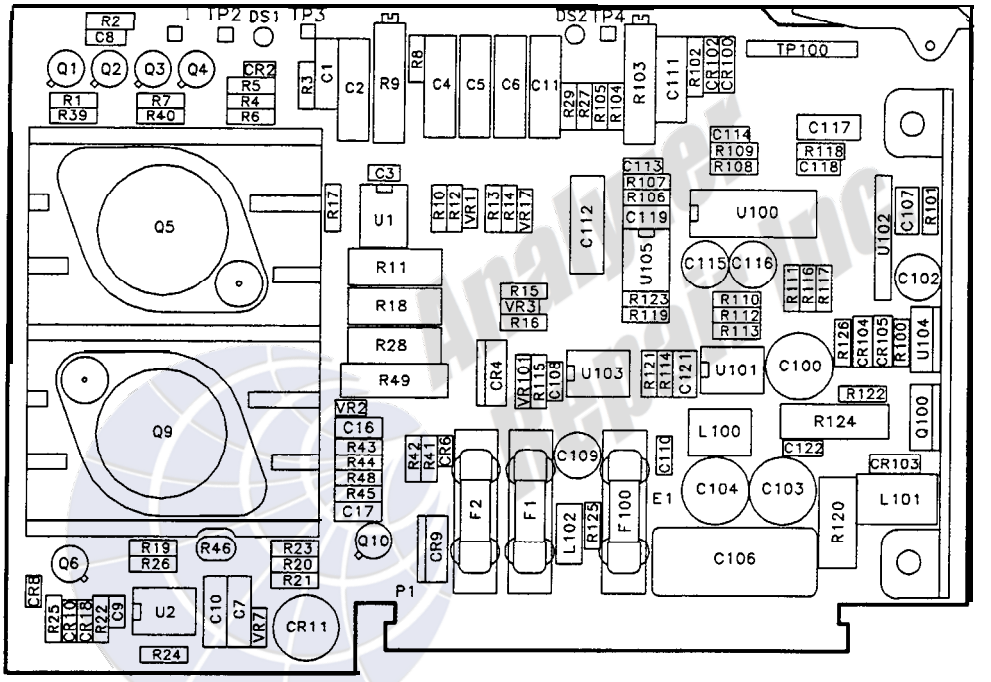

A1A6 ±15 V Regulator Component Locations, 85662-60232 , 85662-60250

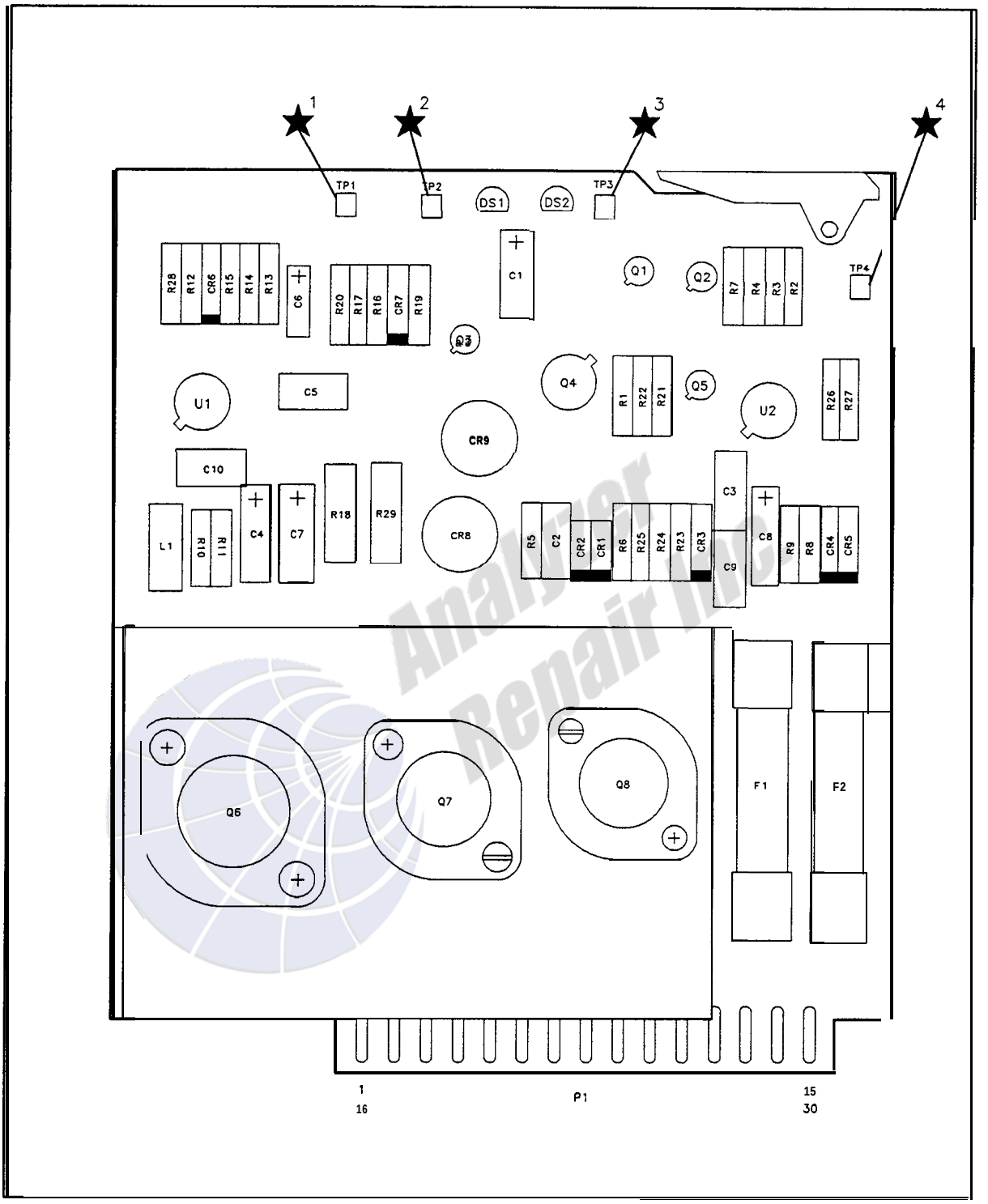

A1A7 +100 V, f5.2 V Regulator Component Locations, 85662-60052 , 85662-60235

A1A6 ±15V REGULATOR
85662-60101
(SERIAL PREFIXES: 2403A-3001A)

P1

PIN	SIGNAL	TO/FROM	FUNCTION BLOCK
1	PWR DWN	A1A7P1-8,23	C
19	HPON	A1A7P1-9,24	C
2	+6V UNREG	A1A8P1-6	B
20	+6V UNREG	A1A8P1-6	B
3	-15V SENSE	A1A8P1-5	B
21	-15V SENSE	A1A8P1-5	B
4	+100V	A1A7P1-12,27	E
22	+100V	A1A7P1-12,27	E
5	+15V	A1A7P1-13,28	A
23	+15V	A1A7P1-13,28	A
6	GND		B
24	GND		B
7	CRT DSBL	A4A9P1-3	E
25	CRT DSBL	A4A9P1-3	E
8	+23V UNREG	A1A8P1-17,35	A
26	+23V UNREG	A1A8P1-17,35	A
9	+15V GND		A
27	+15V GND		A
10	GND		C
28	GND		C
11	GND		E
29	GND		E
12	+23V UNREG	A1A8P1-17,35	D
30	+23V UNREG	A1A8P1-17,35	D
13	GND		E
31	GND		E
14	+23VF	A1A3P1-4,14	D
32	+23VF	A1A3P1-4,14	D
15	COLLECTOR	A1A3P1-1,11	D
33	COLLECTOR	A1A3P1-1,11	D
16	BASE	A1A3P1-2,12	D
34	BASE	A1A3P1-2,12	D
17	OSC DRIVE	A1A3P1-3,13	E
35	OSC DRIVE	A1A3P1-3,13	E
18	HV FEEDBACK	A1A3P1-7,17	E
36	HV FEEDBACK	A1A3P1-7,17	E

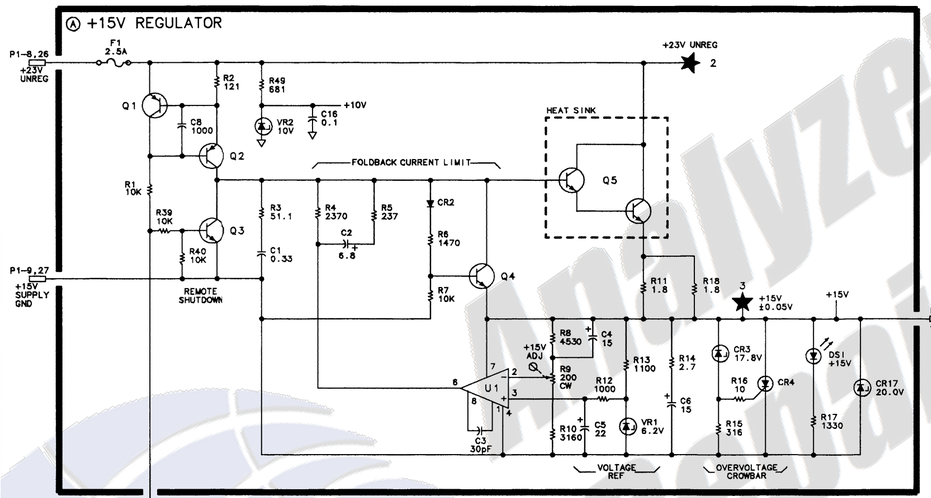

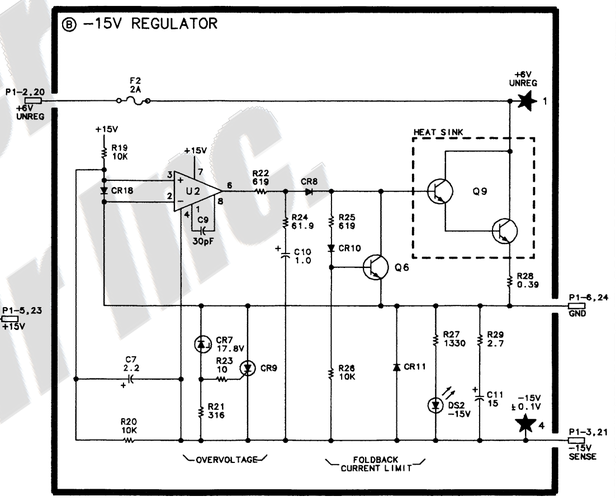

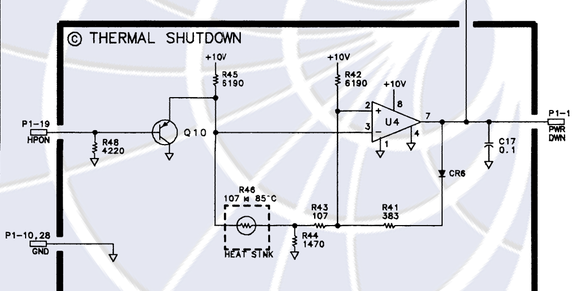

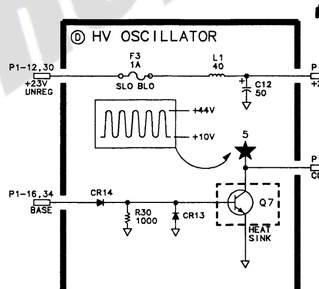

WARNING
HAZARDOUS VOLTAGE

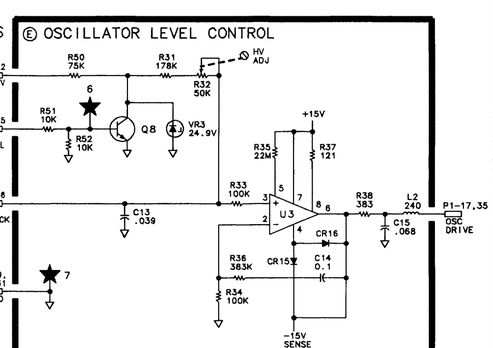

NOTES:

1. REFERENCE DESIGNATORS WITHIN THIS ASSEMBLY ARE ABBREVIATED. FOR COMPLETE REFERENCE DESIGNATION, PREFIX ABBREVIATION WITH ASSEMBLY DESIGNATION.
2. UNLESS OTHERWISE INDICATED:
   RESISTANCE IS IN OHMS (Ω)
   CAPACITANCE IS IN MICROFARADS (μF)
   INDUCTANCE IS IN MICROHENRIES (μH)
3. UNLESS OTHERWISE INDICATED:
   SIGNALS ENTER AT LEFT SIDE AND EXIT AT RIGHT SIDE OF FUNCTION BLOCKS.

WARNING

4. HAZARADOUS VOLTAGE EXISTS ON THIS BOARD

A1A6

A1A6 ±15V REGULATOR, SCHEMATIC DIAGRAM

Analyzer Repair Inc.

A1A6 HIGH VOLTAGE POWER SUPPLY
85662-60232
(SERIAL PREFIXES: 3004A - 3014A)
85662-60250
(SERIAL PREFIXES: 3026A AND ABOVE)

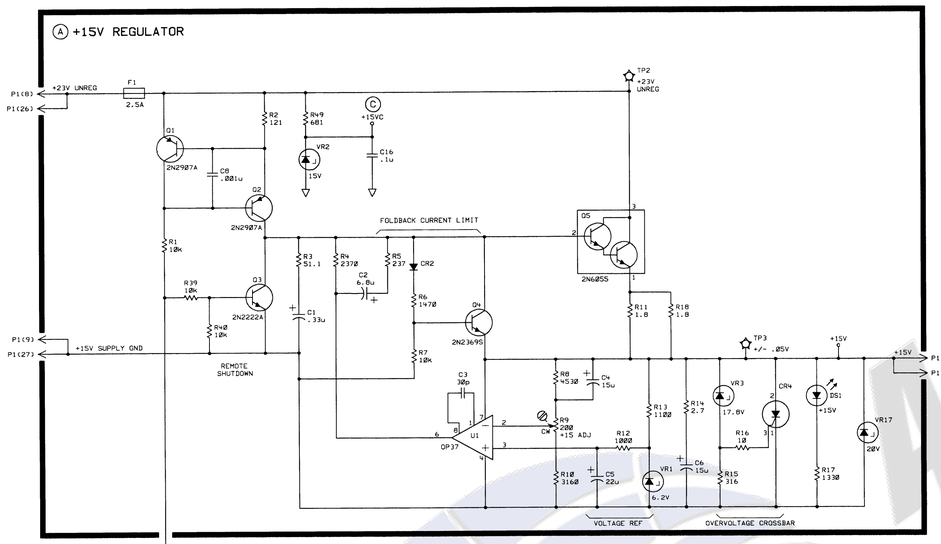

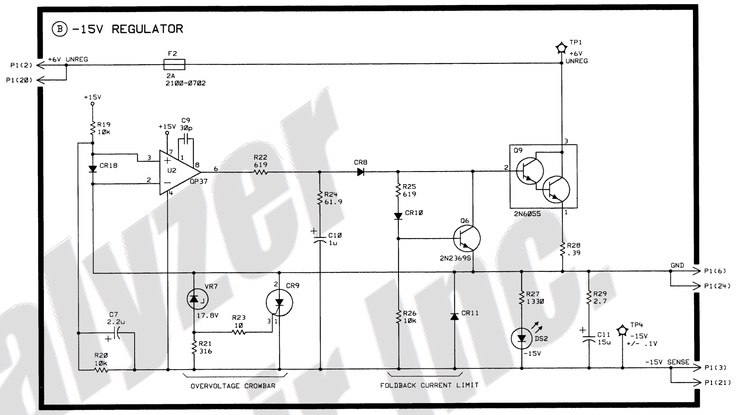

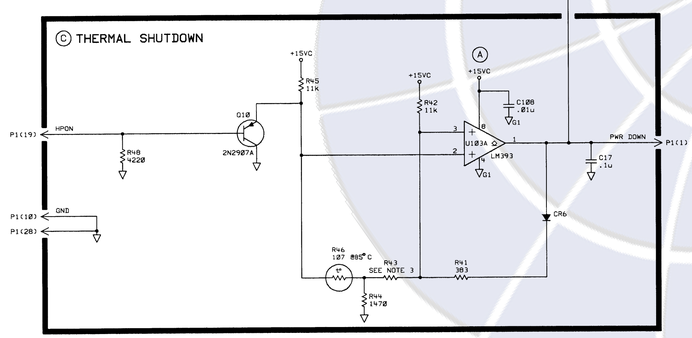

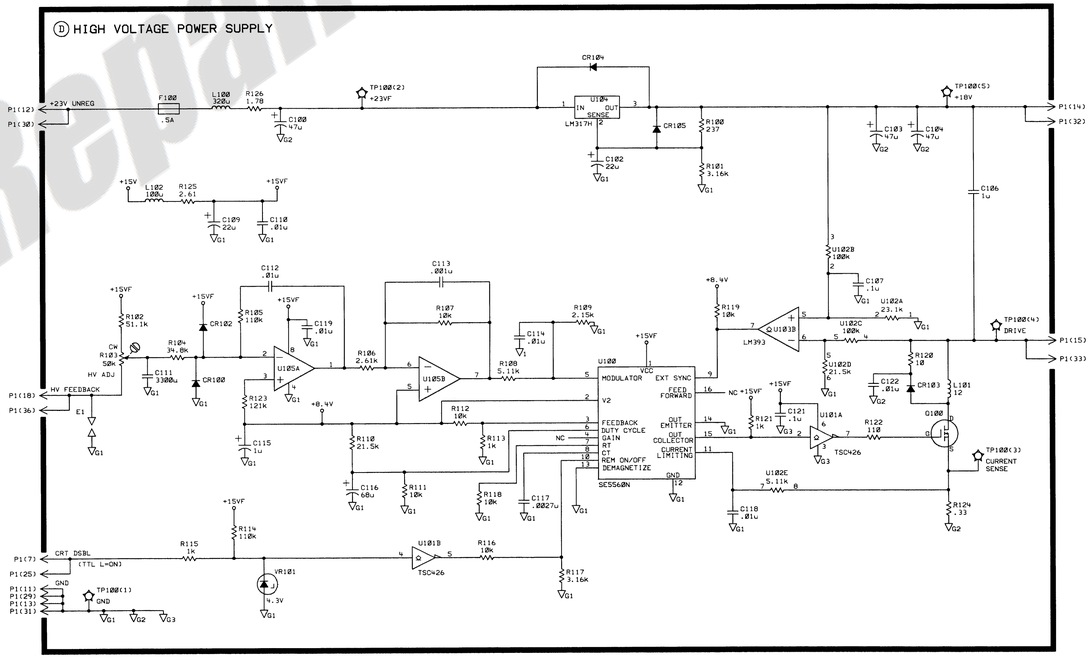

NOTES:

1. REFERENCE DESIGNATORS WITHIN THIS ASSEMBLY ARE ABBREVIATED. PREFIX ABBREVIATION WITH ASSEMBLY NUMBER FOR COMPLETE REFERENCE DESIGNATOR.

2. UNLESS OTHERWISE INDICATED:
RESISTANCE IN OHMS (Ω)
CAPACITANCE IN MICROFARADS (uF)
INDUCTANCE IN MICROHENRIES (uH)

3. THE VALUE OF A1A6R43 WAS CHANGED, CAUSING THE A1A6 HIGH VOLTAGE POWER SUPPLY HP PART NUMBER TO CHANGE FROM 85662-60232 TO 85662-60250.

A1A6 PART NUMBER	R43 VALUE
85662-60232	107
85662-60250	75

Analyzer Repair Inc.

A1A7 +100V, +5.2V REGULATOR
85662-60052
(SERIAL PREFIXES: 2403A-3001A)
85662-60235
(SERIAL PREFIX: 3004A)

P1

PIN	SIGNAL	TO/FROM	FUNCTION BLOCK
1	+9V UNREG	A1A8P1-9,27	NC
16	+5.2V GND		NC
2	+5.2V SENSE	A1A8P1-10,28	B
17	+9V UNREG	A1A8P1-9,27	NC
3	+9V UNREG	A1A8P1-9,27	B
18	+9V UNREG	A1A8P1-9,27	B
4	+5.2V GND		B
19	+5.2V GND		B
5	+5.2V	A1A8P1-10,28	B
20	+5.2V	A1A8P1-10,28	B
6	+100V GND		NC
21	+100V GND		NC
7	+118V UNREG	A1A8P1-12,30	NC
22	+118V UNREG	A1A8P1-12,30	NC
8	PWR DWN	A1A6P1-1	A
23	PWR DWN	A1A6P1-1	A
9	HPON	A1A9	NC
24	HPON	A1A9	NC
10	+118V UNREG	A1A8P1-12,30	A
25	+118V UNREG	A1A8P1-12,30	A
11	+100V GND	A1A10	A
26	+100V GND	A1A10	A
12	+100V/+120V		A
27	+100V/+120V		A
13	+15V	A1A6P1-5,23	C
28	+15V	A1A8P1-5,23	C
14	NC		
29	NC		
15	NC		
30	NC		

WARNING
HAZARDOUS VOLTAGE

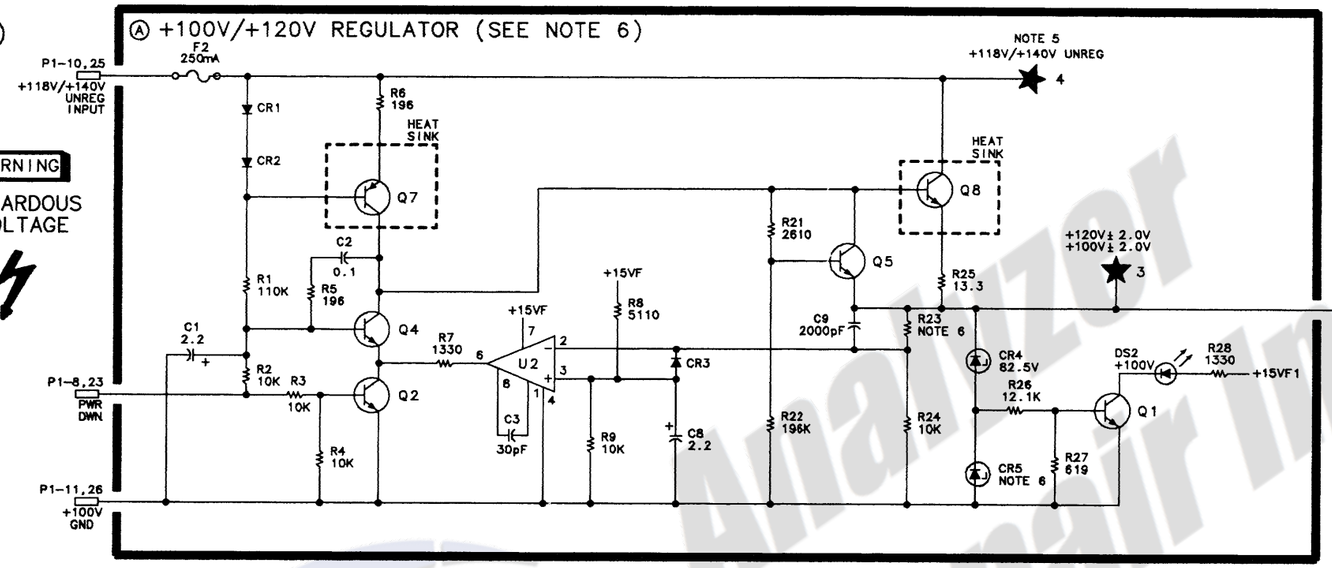

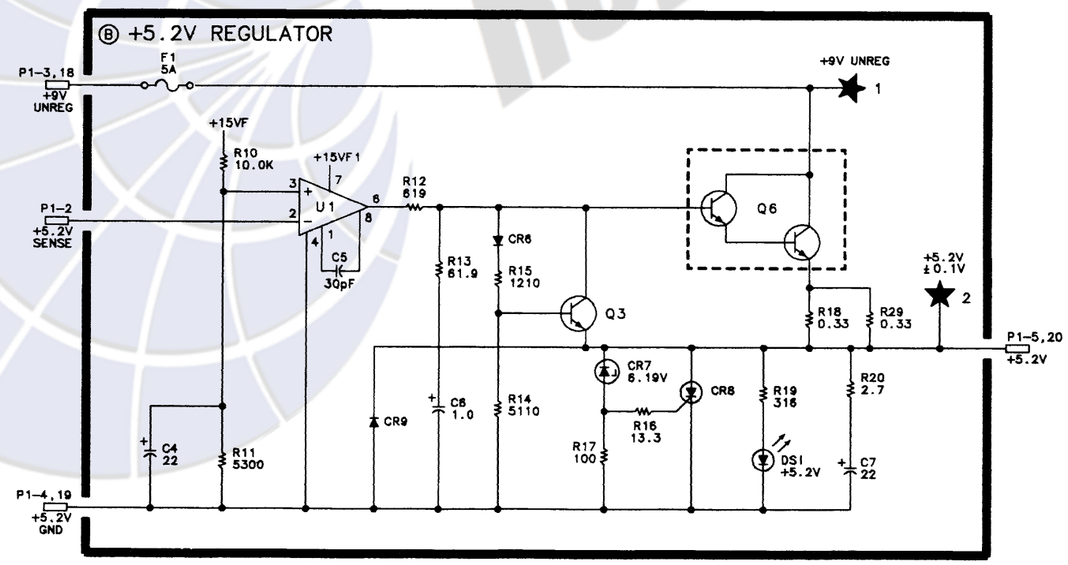

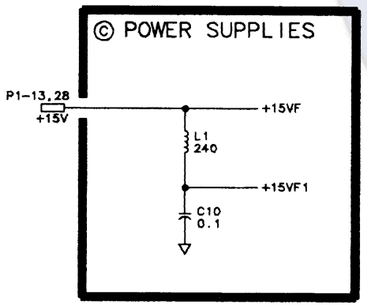

NOTES:

1. REFERENCE DESIGNATORS WITHIN THIS ASSEMBLY ARE ABBREVIATED. FOR COMPLETE REFERENCE DESIGNATION, PREFIX ABBREVIATION WITH ASSEMBLY DESIGNATION.
2. UNLESS OTHERWISE INDICATED: RESISTANCE IS IN OHMS (Ω) CAPACITANCE IS IN MICROFARADS(μF) INDUCTANCE IS IN MICROHENRIES(μH)
3. UNLESS OTHERWISE INDICATED: SIGNALS ENTER AT LEFT SIDE AND EXIT AT RIGHT SIDE OF FUNCTION BLOCKS.

WARNING

4. HAZARADOUS VOLTAGE EXISTS ON THIS BOARD
5. THE TIME CONSTANT OF THE UNREGULATED CIRCUIT IS 25 SECONDS. ALLOW ADEQUATE TIME AFTER THE POWER CORD IS REMOVED FOR THE FILTER CAPACITORS TO DISCHARGE BEFORE SERVICING.
6. THE A1A7 BOARD HAS TWO VERSIONS, 85662-60052 (SERIAL NUMBER PREFIXES 2403A - 3001A) AND 85662-60235 (SERIAL NUMBER PREFIXES 3004A AND ABOVE). THE REGULATED OUTPUT VOLTAGE OF FUNCTION BLOCK 'A' DIFFERS BETWEEN THE TWO VERSIONS. THE TITLE OF FUNCTION BLOCK 'A' REFLECTS THE CIRCUIT CHANGE, HOWEVER THE TITLE OF THE BOARD ASSEMBLY WAS NOT CHANGED. THE VALUES OF A1A7CR5 AND A1A7R23 DIFFER BETWEEN THE TWO VERSIONS ALSO. THE REGULATED OUTPUT VOLTAGE AND THE COMPONENT VALUES ARE LISTED BELOW.

BOARD VERSION	REGULATED OUTPUT	CR5	R23
85662-60052	+100V	23.7V	90.9K
85662-60235	+120V	47V	110K

Analyzer Repair Inc.

A1A7

A1A7 +100V, +5.2V REGULATOR, SCHEMATIC DIAGRAM

A1A8/A1A9

A1A8 Rectifier, Circuit Description

Warning **Because of the high voltage present in this assembly, servicing should be performed only by qualified personnel.**

A1A8 Rectifier contains three bridge rectifiers and one full-wave rectifier to provide unregulated power for the IF-Display Section. External power is supplied to the instrument through Line Module FL1 and Power Transformer A1T1.

+9 V UNREG

Full-wave rectifier CR7 and CR8 provides an unregulated +9 V to A1A7 +100 V, +5.2 V Regulator. LED DS1 is lit whenever there is power to the transformer.

Test points TP1 and TP2, when jumpered together, cause HPON to go high, turning on the IF-Display Section in the absence of a signal from the RF Section when power is required for troubleshooting.

The LINE TRIGGER voltage is selected as required by A3A1 Trigger.

+118 V Unregulated
+140 V Unregulated

The A1A8 Rectifier board assembly has three versions; HP Part Numbers 85662-60133, 85662-60204, and 85662-60234. Each version changed this circuit.

85662-60133 (Serial Number Prefixes: 2403A-2813A)

Bridge rectifier, U1, provides an unregulated +118 V to A1A7 +100 V, +5.2 V Regulator.

85662-60204 (Serial Number Prefixes: 2816A-3001A)

This bridge rectifier is made of discreet diodes CR13, CR14, CR15, and CR16. This bridge rectifier provides an unregulated +118 V to A1A7 +100 V, +5.2 V Regulator.

85662-60234 (Serial Number Prefixes: 3004A and Above)

This bridge rectifier, made of discreet diodes CR13, CR14, CR15, and CR16, is stacked on the +23 V Unregulated Rectifier output to provide an unregulated f140 V to A1A7 +100 V, +5.2 V Regulator.

Analyzer Repair Inc.

Warning **The time constant of the filter capacitor is about 25 seconds. Before servicing, allow adequate time for discharge after line power cable is removed.**

+23 V UNREG

The +23 V unregulated supply, bridge rectifier CR9 through CR12, includes an overvoltage protection circuit. If line power from a 220 V/240 V source is applied when the Line Voltage Selector is set to 100 V/120 V, the overvoltage causes CR6 to conduct, turning on CR5 to blow the fuse in the Line Module.

+5 V UNREG

Bridge rectifier CR1 through CR4 provides unregulated +5 V and -15 V to A1A6 ±15 V Regulator.

A1A9 Bus Transition, Circuit Description

A1A9 Bus Transition provides jack J2 (inside front panel) for the 50-wire Instrument Bus, which is routed through the IF-Display Section through a flat ribbon cable W8.

HPON, the IF-Display Section power-on control line (W8 wire 22), is sensed by amplifier Q1 and Q2 to activate fan relay K1, which supplies line power to the cooling fan B1.

The i-5.2 V supply is connected to the LSTP line (W8 wire 43) through CR1 to halt operation of Al5 Controller if there is a supply failure.

Analyzer Repair Inc.

HP Part Number 85662-60133

A1A8 Rectifier

Reference Designatior	HP Part Number	C. D	Qty	Description	Mfr Code	Mfr Part Number
A1A8	85662-60133	(	1	BOARD ASSEMBLY, RECTIFIER (SERIAL PREFIXES: 2403A-2813A)	2848(	85662-60133
A1A8C1	0160-4832	4	1	CAPACITOR-FXD .01UF +-10% 100VDC CER	04222	SA101C103KAAH
A1A8C2	0160-4298	8	1	CAPACITOR-FXD 4700PF +-20% 250VDC CER		815-250V X5R 472M
A1A8C3	0160-4832	4	1	CAPACITOR-FXD .01UF +-10% 100VDC CER	04222	SA101C103KAAH
A1A8C4	0160-0168	1	1	CAP-FXD 0.1uF 200 V POLYE-FL	84411	HEW-238M
A1A8C5	0160-0168	1	1	CAP-FXD 0.1uF 200 V POLYE-FL	84411	HEW-238M
A1A8C6	0160-0970	.	1	CAP-FXD 0.47uF 80 V POLYE-FL	84411	HEW-238T
A1A8C7	0180-0197	8	1	CAPACITOR-FXD 2.2UF+-10% 20VDC TA	56289	150D225X9020A2-DYS
A1A8CR1	1901-0662	3	1	DIODE-PWR RECT 100V 6A	04713	MR751
A1A8CR2	1901-0662	3	1	DIODE-PWR RECT 100V 6A	04713	MR751
A1A8CR3	1901-0662	3	1	DIODE-PWR RECT 100V 6A	04713	MR751
A1A8CR4	1901-0662	3	1	DIODE-PWR RECT 100V 6A	04713	MR751
A1A8CR5	1884-0018	5	1	THYRISTOR-SCR 2N4186 VRRM=200	04713	2N4186
A1A8CR6	1902-0656	7	1	DIODE-ZNR 39V 5% PD=1W IR=5UA	04713	
A1A8CR7	1901-0662	3	1	DIODE-PWR RECT 100V 6A	04713	MR751
A1A8CR8	1901-0662	3	1	DIODE-PWR RECT 100V 6A	04713	MR751
A1A8CR9	1901-0662	3	1	DIODE-PWR RECT 100V 6A	04713	MR751
A1A8CR10	1901-0662	3	1	DIODE-PWR RECT 100V 6A	04713	MR751
A1A8CR11	1901-0662	3	1	DIODE-PWR RECT 100V 6A	04713	MR751
A1A8CR12	1901-0662	3	1	DIODE-PWR RECT 100V 6A	04713	MR751
A1A8DS1	1990-0486	6	1	LED-LAMP LUM-INT=1MCD IF=20MA-MAX BVR=5V	28480	5082-4684
A1A8F1	2110-0007	4	1	FUSE 1A 250V TD FE UL	75915	313 001
A1A8MP1	1480-0073	6	1	PIN ROLL .062-IN-DIA .25 IN-LG	72962	99-012-062-0250
A1A8MP2	4047-0747	2	1	EXTR-PC BD GRA POLYC .062-BD-THKNS	28480	4040-0747
A1A8MP4	2110-0643	4	1	FUSE HOLDER-CLIP TYPE 15A 250V		FH-8000
A1A8R1	0757-0420	3	1	RESISTOR 750 +-1% .125W TF TC=0+-100	19701	SFR25H
A1A8R2	1698-3155	1	1	RESISTOR 4.64K 1% .125W TF TC=0+-100	19701	SFR25H
A1A8R3	1698-0085	0	1	RESISTOR 2.61K 1% .125W TF TC=0+-100	19701	SFR25H
A1A8R4	1698-3152	8	1	RESISTOR 3.48K 1% .125W TF TC=0+-100	19701	SFR25H
A1A8R5	1757-0280	3	1	RESISTOR 1K +-1% .125W TF TC=0+-100	19701	SFR25H
A1A8R6	1757-0367	7	1	RESISTOR 100K +-1% .5W TF TC=0+-100	19701	5053R
A1A8R7	1698-3407	6	1	RESISTOR 1.96K 1% .5W TF TC=0+-100	19701	5053R
A1A8R8	1698-3447	4	1	RESISTOR 422 1% .125W TF TC=0+-100	19701	SFR25H
A1A8TP1	1360-1788	7	1	CONNECTOR-SGL CONT PIN .045-IN-BSC-SZ SQ	04574	
A1A8TP2	0360-1788	7	1	CONNECTOR-SGL CONT PIN .045-IN-BSC-SZ SQ	04574	
A1A8U1	1901-0367	5	1	DIODE-FW BRDG 600V 1A	28480	1901-0367

**Indicates factory-selected value*

HP Part Number 85662-60204

A1A8 Rectifier

Reference Designation	HP Part Number	C-D	Qty	Description	Mfr Code	Mfr Part Number
A1A8	85662-60204	6	1	RECTIFIER BOARD ASSEMBLY (SERIAL PREFIXES: 2816A-3001A)	2848(	85662-60204
A1A8C1	0160-4832	4	1	CAPACITOR-FXD .01UF +-10% 100VDC CER	04224	SA101C103KAAH
A1A8C2	0160-4298	6	1	CAPACITOR-FXD 4700PF +-20% 250VDC CER		815-250V X5R 472M
A1A8C3	0160-4832	4	1	CAPACITOR-FXD .01UF +-10% 100VDC CER	04222	SA101C103KAAH
A1A8C4	0160-0168	1	1	CAP-FXD 0.1uF 200 V POLYE-FL	84411	HEW-238M
A1A8C5	0160-0168	1	1	CAP-FXD 0.1uF 200 V POLYE-FL	84411	HEW-238M
A1A8C6	0160-0970	3	1	CAP-FXD 0.47uF 80 V POLYE-FL	84411	HEW-238T
A1A8C7	0180-0197	8	1	CAPACITOR-FXD 2.2UF+-10% 20VDC TA	56289	150D225X9020A2-DYS
A1A8CR1	1901-0662	3	1	DIODE-PM RECT 100V 6A	04713	MR751
A1A8CR2	1901-0662	3	1	DIODE-PWR RECT 100V 6A	04713	MR751
A1A8CR3	1901-0662	3	1	DIODE-PWR RECT 100V 6A	04713	MR751
A1A8CR4	1901-0662	3	1	DIODE-PWR RECT 100V 6A	04713	MR751
A1A8CR5	1884-0316	6	1	THYRISTDR-SCR 2N6402 TO-220AB VRRM=200	04713	2N6402
A1A8CR6	1902-0656	7	1	DIODE-ZNR 39V 5% PD=1W IR=5UA	04713	
A1A8CR7	1901-0662	3	1	DIODE-PWR RECT 100V 6A	04713	MR751
A1A8CR8	1901-0662	3	1	DIODE-PWR RECT 100V 6A	04713	MR751
A1A8CR9	1901-0662	3	1	DIODE-PWR RECT 100V 6A	04713	MR751
A1A8CR10	1901-0662	3	1	DIODE-PWR RECT 100V 6A	04713	MR751
A1A8CR11	1901-0662	3	1	DIODE-PWR RECT 100V 6A	04713	MR751
A1A8CR12	1901-0662	3	1	DIODE-PWR RECT 100V 6A	04713	MR751
A1A8CR13	1901-0029	6	1	DIODE-PWR RECT 600V 750MA DO-29	04713	
A1A8CR14	1901-0029	6	1	DIODE-PWR RECT 6DOV 750MA DO-29	04713	
A1A8CR15	1901-0029	6	1	DIODE-PM RECT 600V 750MA DO-29	04713	
A1A8CR16	1901-0029	6	1	DIODE-PM RECT 600V 750MA DO-29	04713	
A1A8DS1	1990-0486	6	1	LED RED 1 MCD	28480	1990-0486
A1A8F1	2110-0007	4	1	FUSE 1A 250V TD FE UL	75915	313 001
A1A8MP1	1480-0073	6	1	PIN-ROLL .062-IN-DIA .25-IN-LG BE-CU	72962	99-012-062-0250
A1A8MP2	8040-0747	2	1	EXTR-PC BD GRA POLYC .062-IN-BD-THKNS		
A1A8MP3				YOT ASSIGNED		
A1A8MP4	2110-0643	4	1	-USEHOLDER-CLP-TYP 15A 250 V		FH-8000
A1A8MP5	3050-0874	6	1	WASHER-SPR BLVL ND. 4 .1195-IN-ID	04713	B52200F007
A1A8MP6	2260-0001	5	1	YUT-HEX-DBL-CHAM 4-40-THD.094-IN-THK	80120	
A1A8MP7	1340-1082	2	1	INSULATOR-FLG-BSHG NYLON	5A624	NSB-04-030-N
A1A8MP8	0340-1203	9	2	INSULATOR-XSTR	18565	69-11-A536-1674
A1A8MP9	1205-0549	9	1	HEAT SINK SGL TO-220-CS	13103	6078
A1A8MP10	2200-0143	0	1	SCREW-MACH 4-40 .375-IN-LG PAN-HD-POZI	77250	
A1A8R1	1757-0420	3	1	RESISTOR 750 +-1% .125W TF TC=0+-100	19701	SFR25H
A1A8R2	1698-3155	1	1	RESISTOR 4.641: 1% .125W TF TC=0+-100	19701	SFR25H
A1A8R3	0698-0085	0	1	RESISTOR 2.61K 1% .125W TF TC=0+-100	19701	SFR25H
A1A8R4	0698-3152	B	1	RESISTOR 3.481: 1% .125W TF TC=0+-100	19701	SFR25H
A1A8R5	1757-0280	3	1	RESISTOR 1K +-1% .125W TF TC=0+-100	19701	SFR25H
A1A8R6	1757-0367	7	1	RESISTOR 100K +-1% .5W TF TC=0+-100	19701	5053R
A1A8R7	0698-3407	6	1	RESISTOR 1.96K 1% .5W TF TC=0+-100	19701	5053R
A1A8R8	0698-3447	4	1	RESISTOR 422 1% .125W TF TC=0+-100	19701	SFR25H
A1A8TP1	1360-1788	7	1	CONNECTOR-SGL CONT PIN .045-IN-BSC-SZ SQ	04574	
A1A8TP2	1360-1788	7	1	CONNECTOR-SGL CONT PIN .045-IN-BSC-SZ SQ	04574	

**Indicates factory-selected value*

HP Part Number 85662-60234

A1A8 Rectifier

Reference Designatior	HP Part Number	C D	Qty	Description	Mfr Code	Mfr Part Number
A1A8	85662-60234		1	RECTIFIER BOARD ASSEMBLY (SERIAL PREFIX: 3004A)	28480	85662-60234
A1A8C1	0160-4832	4	1	CAP-FXD 0.01uF 100 V	02010	SA101C103KAAH
A1A8C2	0160-4298	6	1	CAP-FXD 4700pF 250 V	06352	CK45XR2E472M-H
A1A8C3	0160-4832	4	1	CAP-FXD 0.01uF 100 V	02010	SA101C103KAAH
A1A8C4	0160-0168	1	1	CAP-FXD 0.1uF 200 V POLYE-FL	02367	WMC2P1
A1A8C5	0160-0168	1	1	CAP-FXD 0.1uF 200 V POLYE-FL	02367	WMC2P1
A1A8C6	0160-0970	3	1	CAP-FXD 0.47uF 80 V POLYE-FL	02995	708D1HV474PK800AX
A1A8C7	0180-0197	8	1	CAP-FXD 2.2uF 20 V TA	04200	150D225X9020A2-DYS
A1A8CR1	1901-0662	3	1	DIODE-PWR RECT 100V 6A	02037	MR751
A1A8CR2	1901-0662	3	1	DIODE-PWR RECT 100V 6A	02037	MR751
A1A8CR3	1901-0662	3	1	DIODE-PWR RECT 100V 6A	02037	MR751
A1A8CR4	1901-0662	3	1	DIODE-PWR RECT 100V 6A	02037	MR751
A1A8CR5	1884-0316	6	1	THYRISTOR-SCR 2N6402 TO-220AB VRRM=200	02037	2N6402
A1A8CR6	1902-0656	7	1	DIODE-ZNR 39V 5% PD=1W IR=5UA	02037	
A1A8CR7	1901-0662	3	1	DIODE-PWR RECT 100V 6A	02037	MR751
A1A8CR8	1901-0662	3	1	DIODE-PWR RECT 100V 6A	02037	MR751
A1A8CR9	1901-0662	3	1	DIODE-PWR RECT 100V 6A	02037	MR751
A1A8CR10	1901-0662	3	1	DIODE-PWR RECT 100V 6A	02037	MR751
A1A8CR11	1901-0662	3	1	DIODE-PWR RECT 100V 6A	02037	MR751
A1A8CR12	1901-0662	3	1	DIODE-PWR RECT 100V 6A	02037	MR751
A1A8CR13	1901-0029	6	1	DIODE-PWR RECT 600V 750MA DO-29	02037	
A1A8CR14	1901-0029	6	1	IIODE-PWR RECT 600V 750MA DO-29	02037	
A1A8CR15	1901-0029	6	1	IIODE-PWR RECT 600V 750MA DO-29	02037	
A1A8CR16	1901-0029	6	1	DIODE-PWR RECT 600V 750MA DO-29	02037	
A1A8F1	2110-0007	4	1	-USE 1A 250V TD FE UL	02805	MDL-1
A1A8MP2	1040-0747	2	1	EXTR-PC BD GRA PDLYC .062-IN-BD-THKNS 1-	10401	
A1A8MP3	1480-0073	6	1	'IN-ROLL .062-IN-DIA .25-IN-LG BE-CU	04559	99-012-062-0250
A1A8MP4	2110-0643	4	1	'USEHOLDER-CLP-TYP 15A 250 V	09694	FH-8000
A1A8R1	0757-0420	3	1	RESISTOR 750 +-1% .125W TF TC=0+-100	00746	CRB14 OR CRB25
A1A8R2	1698-3155	1	1	RESISTOR 4.64K 1% .125W TF TC=0+-100	00746	CRB14 OR CRB25
A1A8R3	0698-0085	0	1	RESISTOR 2.61K 1% .125W TF TC=0+-100	00746	CRB14 OR CRB25
A1A8R4	0698-3152	8	1	RESISTOR 3.48K 1% .125W TF TC=0+-100	00746	CRB14 OR CRB25
A1A8R5	1757-0280	3	1	RESISTOR 1K +-1% .125W TF TC=0+-100	00746	CRB14 OR CRB25
A1A8R6	0757-0367	7	1	RESISTOR 100K +-1% .5W TF TC=0+-100	01074	H2
A1A8R7	0698-3407	6	1	RESISTOR 1.96K 1% .5W TF TC=0+-100	01074	H2
A1A8R8	0698-3447	4	1	RESISTOR 422 1% .125W TF TC=0+-100	00746	CRB14 OR CRB25
A1A8TP1	0360-1788	7	1	CONNECTOR-SGL CONT PIN .045-IN-BSC-SZ SQ	02031	
A1A8TP2	0360-1788	7	1	CONNECTOR-SGL CONT PIN .045-IN-BSC-SZ SQ	02031	

**Indicates factory-selected value*

HP Part Number 85662-60056

A1A9 Bus Transition

Reference Designation	HP Part Number	C D	Qty	Description	Mfr Code	Mfr Part Number
A1A9	85662-60056	6	1	BUS TRANSITION BOARD ASSEMBLY	28480	85662-60056
A1A9CR1	1901-0033	2	1	DIODE-GEN PRP 180V 200MA DO-35	9N171	1N645
A1A9CR2	1901-0033	2	1	DIODE-GEN PRP 180V 200MA DO-35	9N171	1N645
A1A9J1	1251-5269	7	1	CONN-POST TYPE .100-PIN-SPCG 50-CONT	18873	68020-650
A1A9K1	1251-4432 0490-0618	4 3	1 1	CONN-RECT D-SUBMIN 50-CKT 50-CONT RELAY 2C 24VDC-COIL 5A 115VAC	71468 77342	DDCE50S-BB R40-E0161-1
A1A9MP1	1251-0600	0	2	CONNECTOR-SGL CONT PIN 1.14-MM-BSC-SZ SQ	27264	16-06-0034
A1A9MP2				NOT ASSIGNED		
A1A9MP3	0380-0334	9	1	STANDOFF-RVT-ON .375-IN-LG 4-40-THD	14480	
A1A9Q1	1854-0477	7	1	TRANSISTOR NPN 2N2222A SI TO-18 PD=500MW	04713	2N2222A
A1A9Q2	1854-0477	7	1	TRANSISTOR NPN 2N2222A SI TO-18 PD=500MW	04713	2N2222A
A1A9R1	0698-3157	3	1	RESISTOR 19.6K 1% .125W TF TC=0+-100	19701	SFR25H
A1A9R2	0757-0442	9	1	RESISTOR 10K +-1% .125W TF TC=0+-100	19701	SFR25H
A1A9R3	0757-0442	9	1	RESISTOR 10K +-1% .125W TF TC=0+-100	19701	SFR25H
A1A9W5	85662-60073	7	1	CABLE ASSEMBLY A1A9 INTERFACE	28480	85662-60073

Analyzer Repair Inc.

**Indicates factory-selected value*

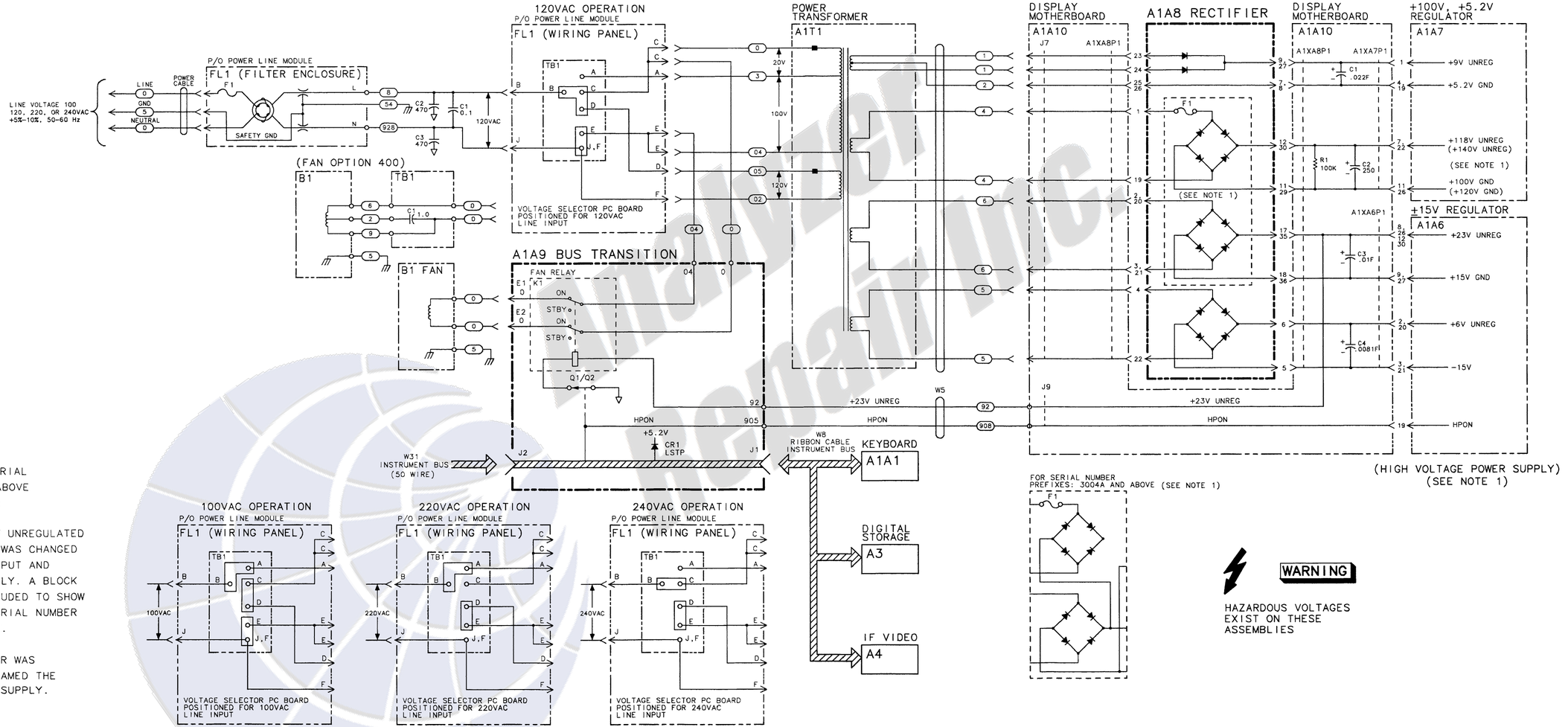

NOTE:

1. IF-DISPLAY SECTIONS WITH SERIAL NUMBER PREFIXES 3004A AND ABOVE HAVE THE FOLLOWING CHANGES:

   A. THE A1A8 RECTIFIER +118V UNREGULATED OUTPUT AND +100V GROUND WAS CHANGED TO +140V UNREGULATED OUTPUT AND +120V GROUND, RESPECTIVELY. A BLOCK DIAGRAM ADDITION IS INCLUDED TO SHOW THE CONFIGURATION FOR SERIAL NUMBER PREFIXES 3004A AND ABOVE.

   B. THE A1A6 +/-15V REGULATOR WAS CHANGED AND HAS BEEN RENAMED THE A1A6 HIGH VOLTAGE POWER SUPPLY.

A1A8 RECTIFIER AND A1A9 BUS TRANSITION, BLOCK DIAGRAM

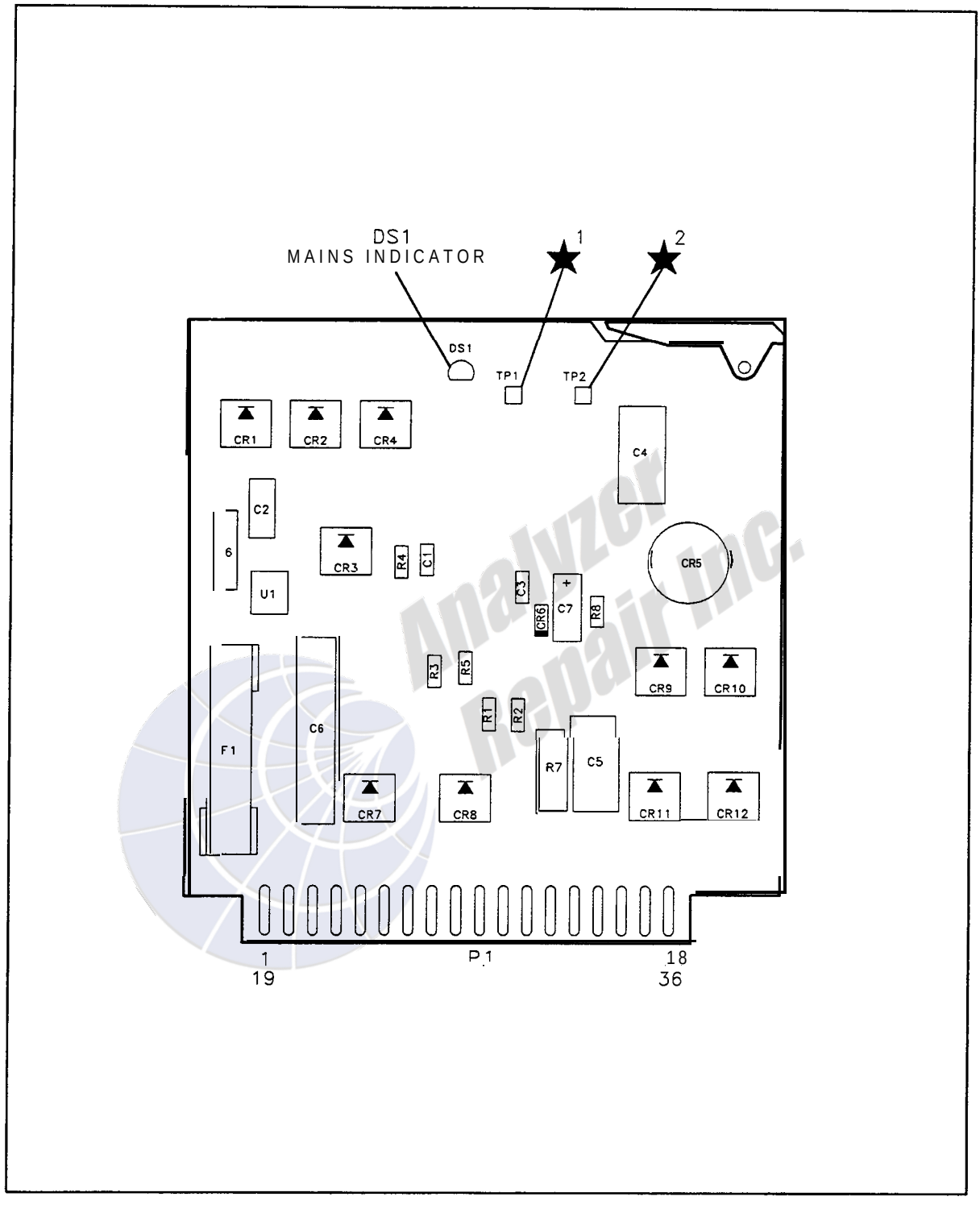

A1A8 Rectifier Component Locations, 85662-60133

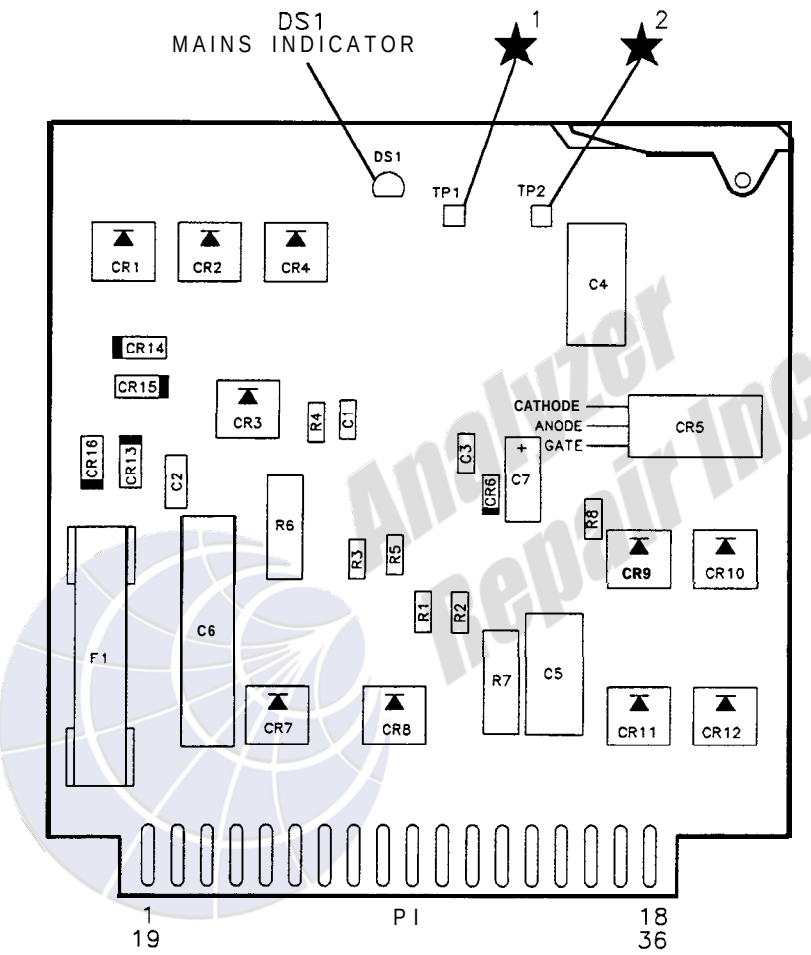

A1A8 Rectifier Component Locations, 85662-60204

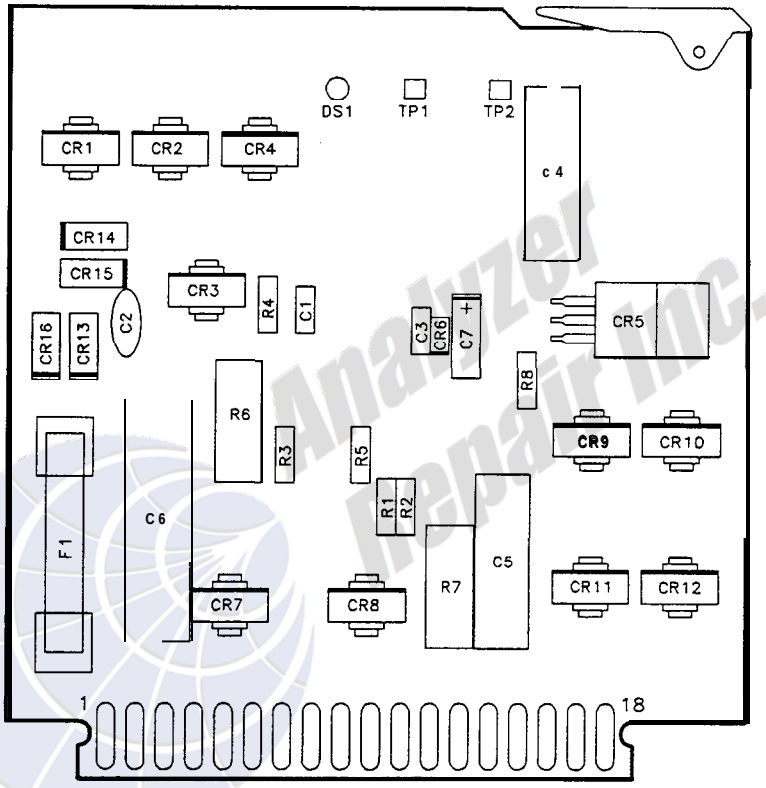

A1A8 Rectifier Component Locations, 85662-60234

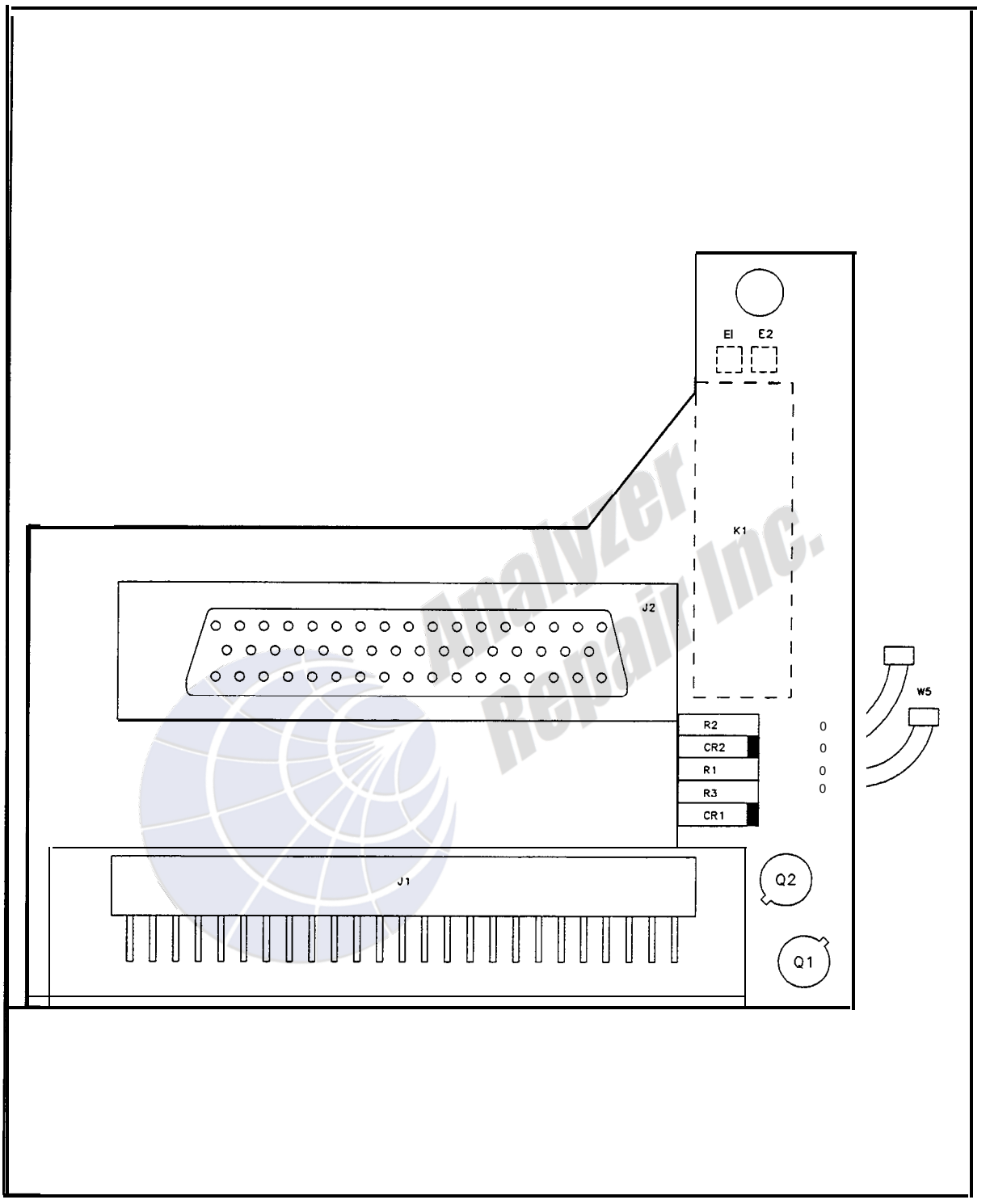

A1A9 Bus Transition Component Locations, 85662-60056

A1A8 RECTIFIER
85662-60133
(SERIAL PREFIXES: 2403A - 2813A)
85662-60204
(SERIAL PREFIXES: 2816A-3001A)

P1

PIN	SIGNAL	TO/FROM
1 19	YELLOW 150 VAC YELLOW 150 VAC	A1T1
2 20	BLUE 23 VAC BLUE 23 VAC	A1T1
3 21	BLUE 23 VAC BLUE 23 VAC	A1T1
4 22	GREEN 20 VAC GREEN 20 VAC	A1T1
5 23	-15V SENSE BROWN 10 VAC	A1A6 A1T1
6 24	+6V UNREG BROWN 10 VAC	A1A6 A1T1
7 25	+5.2V GND RED GND	A1A7 A1T1
8 26	+5.2V GND RED GND	A1A7 A1T1
9 27	+9V UNREG +9V UNREG	A1A7
10 28	NC NC	
11 29	+100V GND +100V GND	A1A7
12 30	+118V UNREG +118V UNREG	A1A7
13 31	NC NC	
14 32	HPON HPON	A1A7
15 33	NC NC	
16 34	LINE TRIGGER LINE TRIGGER	A3
17 35	+23V UNREG +23V UNREG	A1A6
18 36	+15V GND +15V GND	A1A6

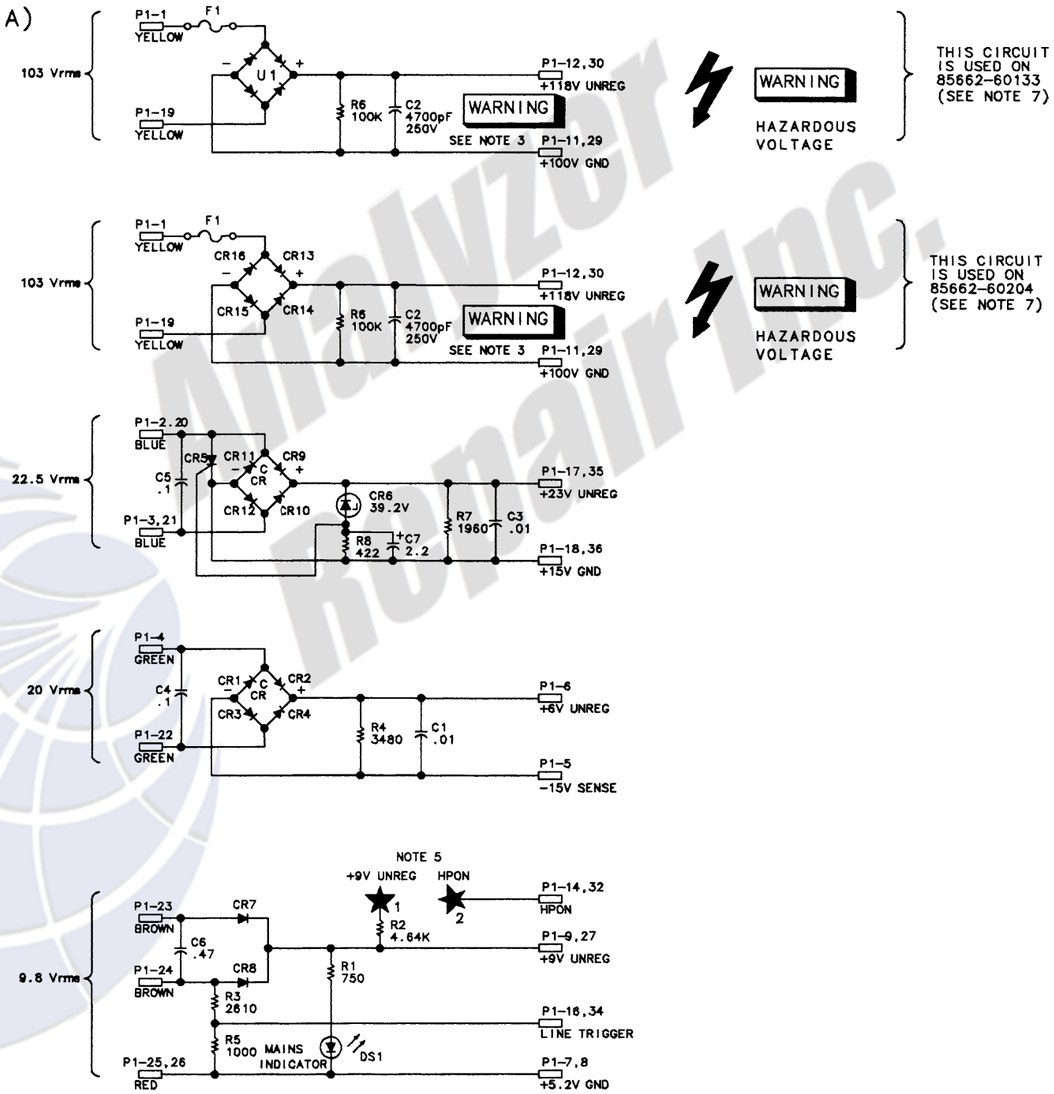

NOTES:

1. REFERENCE DESIGNATORS WITHIN THIS ASSEMBLY ARE ABBREVIATED. FOR COMPLETE REFERENCE DESIGNATION, PREFIX ABBREVIATION WITH ASSEMBLY DESIGNATION.
2. UNLESS OTHERWISE INDICATED:
   RESISTANCE IS IN OHMS (Ω)
   CAPACITANCE IS IN MICROFARADS(μF)
   INDUCTANCE IS IN MICROHENRIES(μH)

   WARNING
3. THE TIME CONSTANT OF THE 100V FILTER CAPACITOR CIRCUIT IS 25 SECONDS. ALLOW ADEQUATE TIME AFTER POWER CORD IS REMOVED FOR FILTER CAPACITORS TO DISCHARGE BEFORE SERVICING.
4. MNEMONIC TABLE:

MNEMONIC	DESCRIPTION
HPON	HIGH=DISPLAY POWER ON
LSTP	LOW=STOP PROCESSOR
HSWP	HIGH=SWEEPING
LSRQ	LOW=SERVICE REQUEST
LDSR	LOW=DIGITAL STORAGE READY
LBIO	LOW=RF SECTION I/O STROBE
LTIO	LOW=DISPLAY SECTION I/O STROBE
ADRØ-ADR5	ADDRESS BITS Ø-5
IOBØ-IOB15	DATA BITS Ø-15
KR8-KR11	KEY ROWS 8-11
KCØ-KC7	KEY COLUMNS Ø-7

5. SHORTING TP1 TO TP2 ALLOWS SERVICING OF THE IF DISPLAY SECTION WITHOUT THE RF SECTION BEING CONNECTED.
6. UNLESS OTHERWISE INDICATED:
   SIGNALS ENTER AT LEFT SIDE OR TOP AND EXIT AT RIGHT SIDE OR BOTTOM OF FUNCTION BLOCKS.
7. THE A1A8 RECTIFIER BOARD HAS MULTIPLE VERSIONS. THIS SCHEMATIC DIAGRAM REPRESENTS THE CIRCUITS OF A1A8 PART NUMBERS 85662-60133 AND 85662-60204. THE 103 Vrms CIRCUIT DIFFERS BETWEEN THE TWO A1A8 PART NUMBERS. THE A1A8 RECTIFIER BOARD PART NUMBER MUST BE IDENTIFIED TO TO DETERMINE WHICH VERSION OF THE 103 Vrms MUST BE USED.

A1A8

A1A8 Rectifier, Schematic Diagram

A1A8 RECTIFIER
85662-60234
(SERIAL PREFIXES: 3004A AND ABOVE)

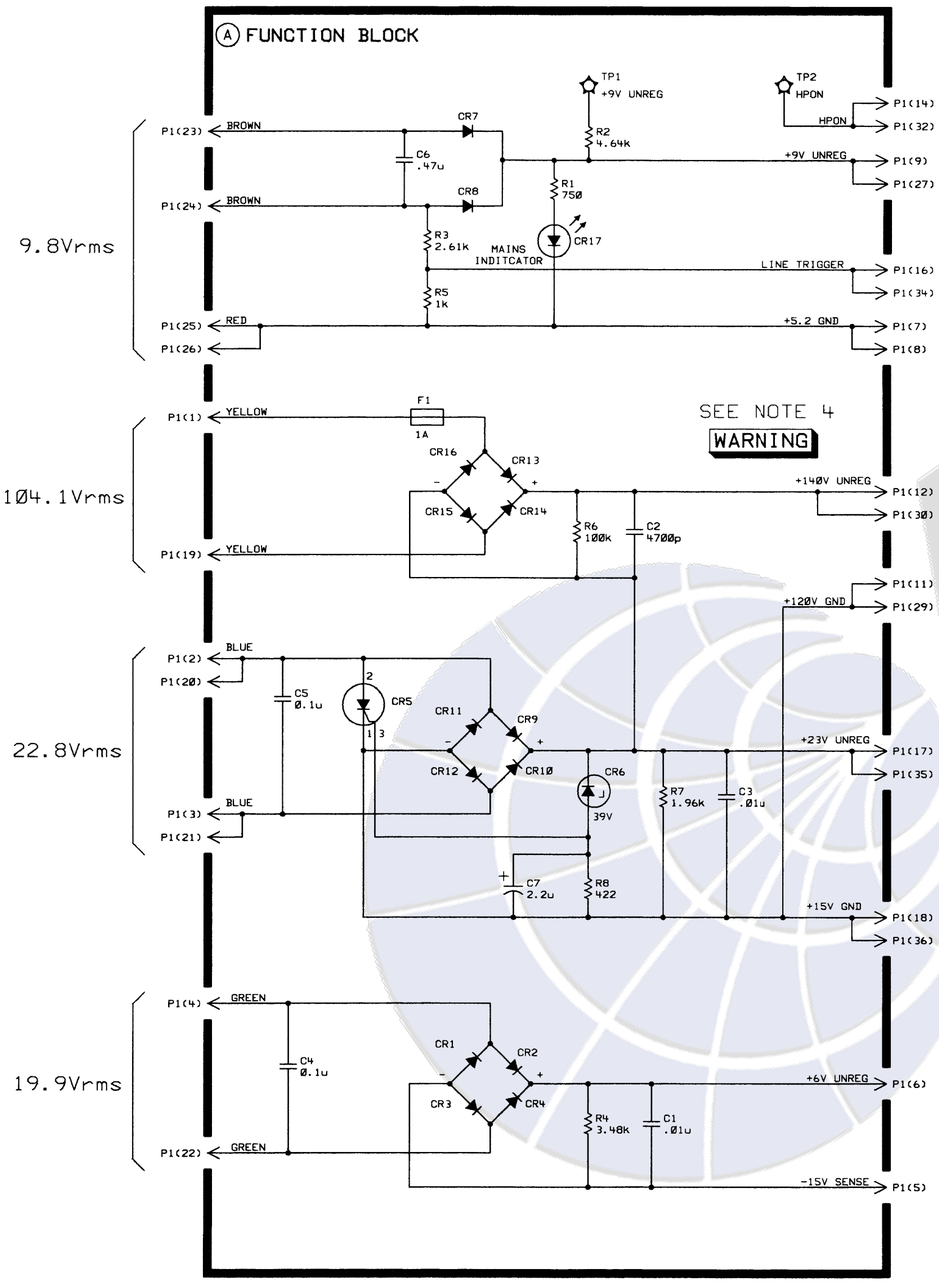

NOTES:

1. REFERENCE DESIGNATORS WITHIN THIS ASSEMBLY ARE ABBREVIATED. PREFIX ABBREVIATION WITH ASSEMBLY NUMBER FOR COMPLETE REFERENCE DESIGNATOR.

2. UNLESS OTHERWISE INDICATED:
RESISTANCE IN OHMS(Ω)
CAPACITANCE IN MICROFARADS (μF)
INDUCTANCE IN MICROHENRIES (μH)

3. MNEMONIC TABLE

MNEMONIC	DESCRIPTION
HPON	HIGH-DISPLAY POWER ON
LSTP	LOW-STOP PROCESSOR
HSWP	HIGH-SWEEPING
LSRQ	LOW-SERVICE REQUEST
LDSR	LOW-DIGITAL STORAGE READY
LBIO	LOW-RF SECTION I/O STROBE
LTIO	LOW-DISPLAY SECTION I/O STROBE
ADR0-ADRS	ADDRESS BITS 0-5
IOB0-IOB15	DATA BITS 0-15
KR8-KR11	KEY ROWS 8-11
KC0-KC7	KEY COLUMNS 0-7

WARNING

4. THE TIME CONSTANT OF THE 100V FILTER CAPACITOR CIRCUIT IS 25 SECONDS. ALLOW ADEQUATE TIME AFTER POWER CORD IS REMOVED FOR FILTER CAPACITORS TO DISCHARGE BEFORE SERVICING.

5. SHORTING TP1 TO TP2 ALLOWS SERVICING OF IF DISPLAY SECTION WITHOUT THE RF SECTION BEING CONNECTED.

Analyzer Repair Inc.

RECTIFIER, SCHEMATIC DIAGRAM: 85662-60234

A1A9 BUS TRANSITION
85662-60056
(SERIAL PREFIX: 2403A)

J1 50-WIRE INSTRUMENT BUS

PIN	SIGNAL
1	GND
2	NC
3	IOBØ
4	IOB1
5	IOB2
6	IOB3
7	IOB4
8	IOB5
9	IOB6
10	IOB7
11	IOB8
12	IOB9
13	IOB10
14	IOB11
15	IOB12
16	IOB13
17	IOB14
18	IOB15
19	NC
20	NC
21	NC
22	HPON
23	ADRØ
24	ADR1
25	ADR2
26	ADR3
27	ADR4
28	ADR5 (NOT USED)
29	NC
30	NC
31	KR8
32	KR9
33	KR10
34	KR11
35	KCØ
36	KC1
37	KC2
38	KC3
39	KC4
40	KC5
41	KC6
42	KC7
43	LSTP
44	HSWP
45	LSRQ
46	LDSR
47	LBIO
48	GND
49	LTIO
50	GND

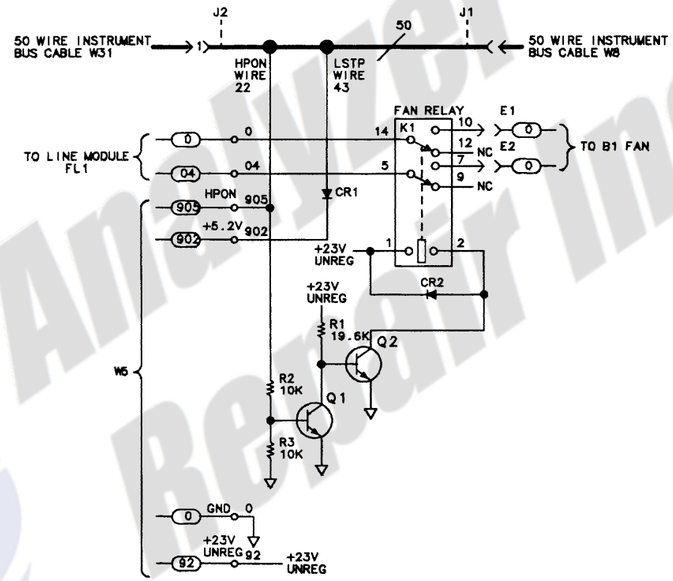

NOTES:

1. REFERENCE DESIGNATORS WITHIN THIS ASSEMBLY ARE ABBREVIATED. FOR COMPLETE REFERENCE DESIGNATION, PREFIX ABBREVIATION WITH ASSEMBLY DESIGNATION.
2. UNLESS OTHERWISE INDICATED: RESISTANCE IS IN OHMS (Ω) CAPACITANCE IS IN MICROFARADS (μF) INDUCTANCE IS IN MICROHENRIES (μH)
3. MNEMONIC TABLE:

MNEMONIC	DESCRIPTION
HPON	HIGH=DISPLAY POWER ON
LSTP	LOW=STOP PROCESSOR
HSWP	HIGH=SWEEPING
LSRQ	LOW=SERVICE REQUEST
LDSR	LOW=DIGITAL STORAGE READY
LBIO	LOW=RF SECTION I/O STROBE
LTIO	LOW=DISPLAY SECTION I/O STROBE
ADRØ-ADR5	ADDRESS BITS Ø-5
IOBØ-IOB15	DATA BITS Ø-15
KR8-KR11	KEY ROWS 8-11
KCØ-KC7	KEY COLUMNS Ø-7

4. UNLESS OTHERWISE INDICATED: SIGNALS ENTER AT LEFT SIDE OR TOP AND EXIT AT RIGHT SIDE OR BOTTOM OF FUNCTION BLOCKS.

Analyzer Repair Inc.

A1A9

A1A9 Bus Transition, Schematic Diagram

HP Part Number 85662-60050

A1A10 Display Motherboard

Reference Designation	HP Part Number	CD	Qty	Description	Mfr Code	Mfr Part Number
A1A10	85662-60050	0	1	DISPLAY MOTHERBOARD ASSEMBLY	28480	85662-60050
A1A10A1XA2	1251-2035	9	1	CONNECTOR-PC EDGE 15-CONT/ROW 2-ROWS	26742	220-624-03
A1A10A1XA3	1251-2034	8	1	CONNECTOR-PC EDGE 10-CONT/ROW L-ROWS		SCM10D/7-1HP
A1A10A1XA4	1251-2035	9	1	CONNECTOR-PC EDGE 15-CONT/ROW P-ROWS	26742	220-624-03
A1A10A1XA5	1251-2035	9	1	CONNECTOR-PC EDGE 15-CONT/ROW 2-ROWS	26742	220-624-03
A1A10A1XA6	1251-2026	8	1	CONNECTOR-PC EDGE 18-CONT/ROW L-ROWS		SCM18D/7-1HP
A1A10A1XA7	1251-2035	9	1	CONNECTOR-PC EDGE 15-CONT/ROW L-ROWS	26742	220-624-03
A1A10A1XA8	1251-2026	8	1	CONNECTOR-PC EDGE 18-CONT/ROW 2-ROWS		SCM18D/7-1HP
A1A10C1	0180-2808	2	1	CAPACITOR-FXD .022F+-20% 20VDC AL	56289	622D157-DHX
A1A10C2	0180-2642	2	1	CAPACITOR-FXD 250UF+50-10% 250VDC AL	56289	36DX9331-DQB
A1A10C3	0180-2641	1	1	CAPACITOR-FXD .018F+75-10% 40VDC AL	56289	36DX8870-DQB
A1A10C4	0180-0453	9	1	CAPACITOR-FXD 8700UF+75-10% 40VDC AL	56289	36DX9181-DQB
A1A10J1	1200-1204	5	1	SOCKET-IC 14-CONT DIP DIP-SLDR	00779	2-641609-2
A1A10J2	1200-1204	5	1	SOCKET-IC 14-CONT DIP DIP-SLDR	00779	2-641609-2
A1A10J3	1251-5815	9	1	CONN-POST TYPE .150-PIN-SPCG 6-CONT	00779	87236-5
A1A10J4	1251-5816	0	1	CONN-POST TYPE .150-PIN-SPCG 4-CONT	00779	87236-3
A1A10J5	1251-5816	0	1	CONN-POST TYPE .150-PIN-SPCG 4-CONT	00779	87236-3
A1A10J7	1251-4281	1	1	CONN-POST TYPE .156-PIN-SPCG 9-CONT	27264	09-65-1091
A1A10J8	1251-5817	1	1	CONN-POST TYPE .150-PIN-SPCG 2-CONT	00779	87236-1
A1A10J9	1251-5816	0	1	CONN-POST TYPE .150-PIN-SPCG 4-CONT	00779	87236-3
A1A10MP1	0360-1788	7	8	CONNECTOR-SGL CONT PIN .045-IN-BSC-SZ SQ	04574	
A1A10MP2	0361-0002	8	3	RIVET-SEMITUB OVH .146DIA .25LG	12014	R-4013
A1A10MP3	0380-0383	8	5	STANDOFF-RVT-ON .125-IN-LG 6-32-THD	00866	1929c
A1A10MP5	2190-0011	8	8	WASHER-LK INTL T NO. 10 .195-IN-ID	06791	1022
A1A10MP6	2680-0099	1	4	SCREW-MACH 10-32 .375-IN-LG PAN-HD-POZI	93907	
A1A10MP7	85662-00045	7	3	BRACKET SUPPORT-MOTHERBOARD	28480	85662-00045
A1A10MP8				NOT ASSIGNED		
A1A10R1	0757-0367	7	1	RESISTOR 100K +-1% .5W TF TC=0+-100	19701	5053R
A1A10W1	8150-2829	2	1	WIRE 18 300V		
A1A10W2	8150-3246	9	1	WIRE 18 300V 92		
A1A10W3	85662-60062	4	1	CABLE ASSEMBLY A1A10 TO A3A10 (A3 PWR)	28480	85662-60063
A1A10W4	85662-60063	5	1	CABLE ASSEMBLY A1A10 TO A4A10 (A4 PWR)		
	85662-00052	6	1	SIDE COVER, HIGH VOLTAGE HOUSING	28480	85662-60052
	85662-00035	5	1	HIGH VOLTAGE HOUSING	28480	85662-60035

**Indicates factory-selected value*

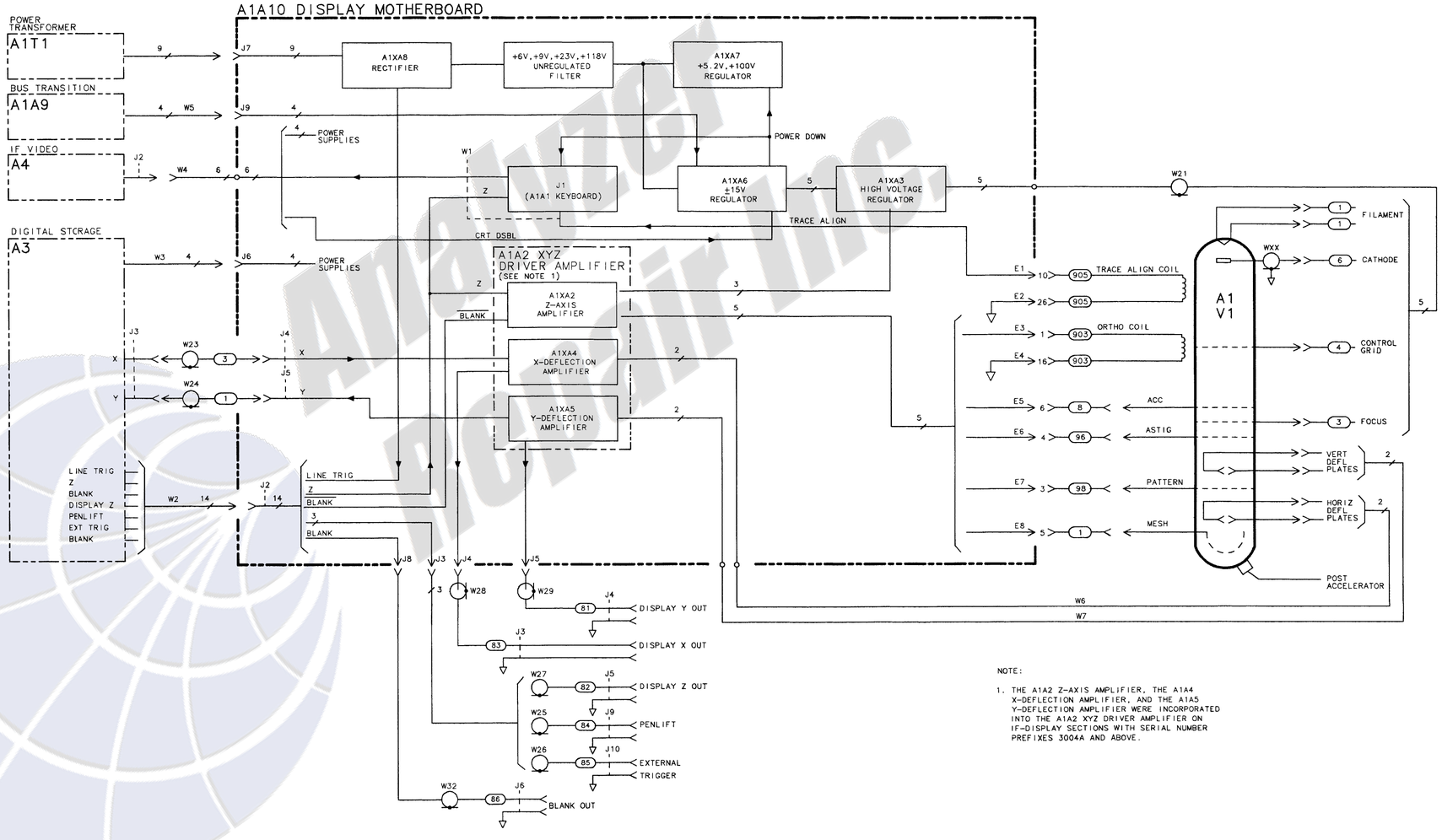

NOTE:

1. THE A1A2 Z-AXIS AMPLIFIER, THE A1A4 X-DEFLECTION AMPLIFIER, AND THE A1A5 Y-DEFLECTION AMPLIFIER WERE INCORPORATED INTO THE A1A2 XYZ DRIVER AMPLIFIER ON IF-DISPLAY SECTIONS WITH SERIAL NUMBER PREFIXES 3004A AND ABOVE.

A1A10 DISPLAY MOTHERBOARD, BLOCK DIAGRAM

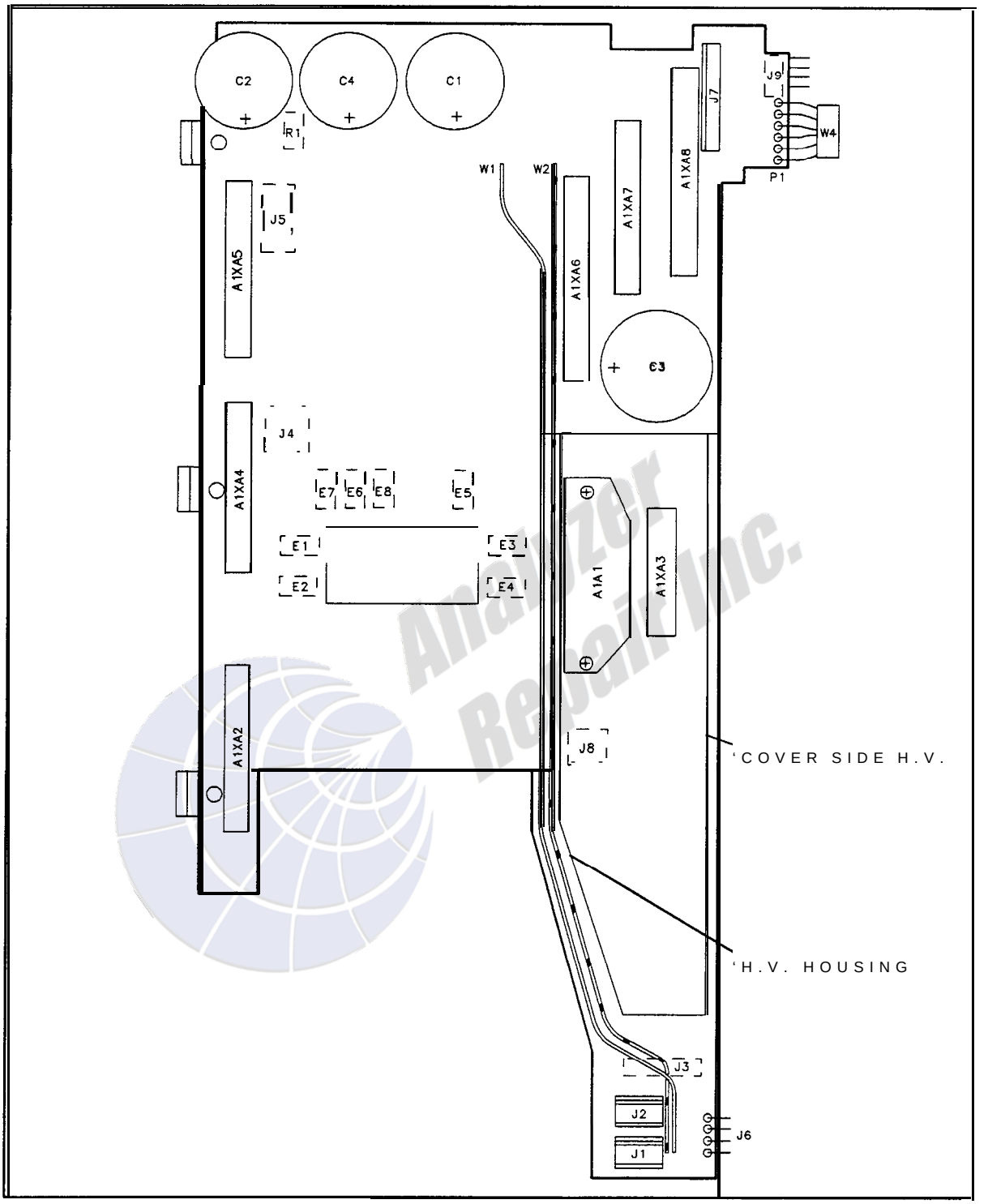

A1A10 Display Motherboard Component Locations, 85662-60050

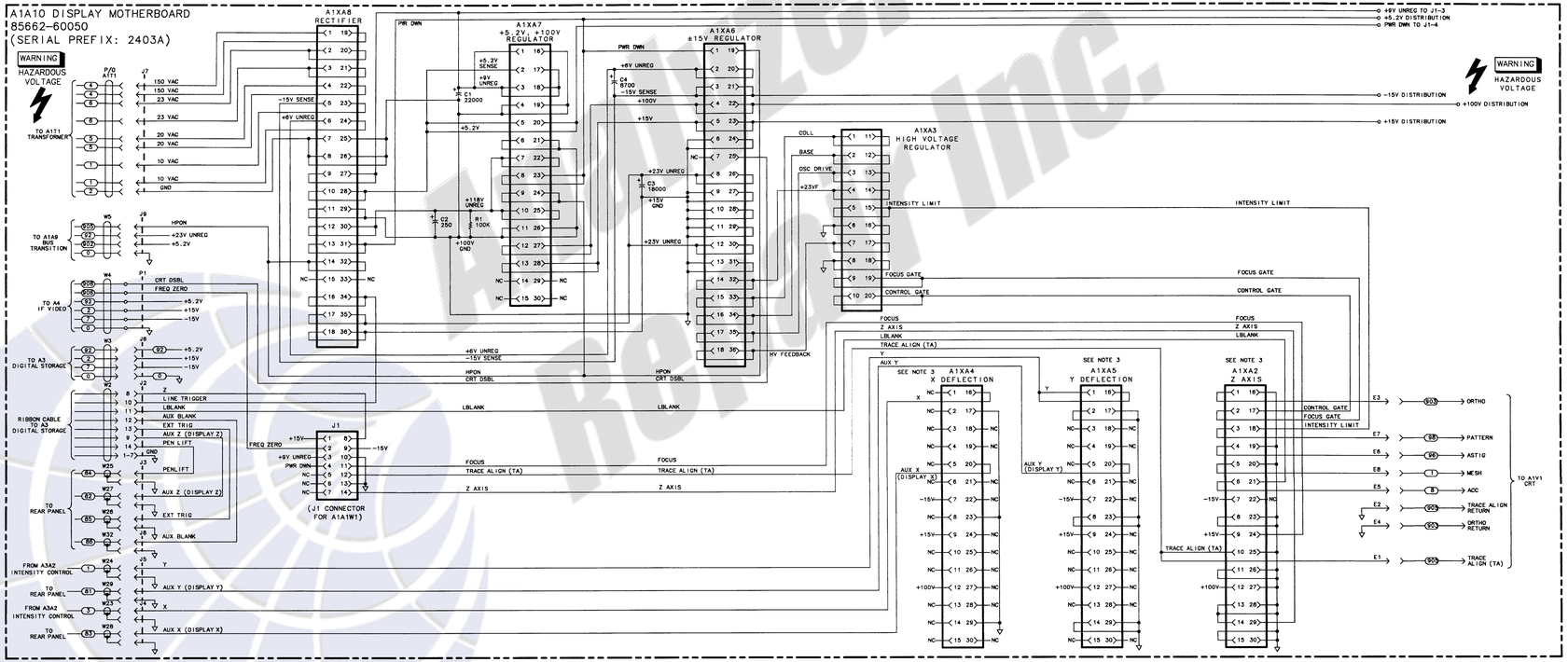

NOTES:

1. REFERENCE DESIGNATORS WITHIN THIS ASSEMBLY ARE ABBREVIATED. FOR COMPLETE REFERENCE DESIGNATION, PREFIX ABBREVIATION WITH ASSEMBLY DESIGNATION.
2. UNLESS OTHERWISE INDICATED: RESISTANCE IS IN OHMS (Ω) CAPACITANCE IS IN MICROFARADS (μF) INDUCTANCE IS IN MICROHENRIES (μH)
3. FOR SERIAL PREFIXES 3004A AND ABOVE CHANGES ARE MADE TO CONNECTORS A1XA2 A1XA4, AND A1XA5. A1XA4 X DEFLECTION AMPLIFIER BOARD AND A1XA5 Y DEFLECTION AMPLIFIER BOARD ARE OBSOLETE AND A1XA2 Z AXIS AMPLIFIER IS EXPANDED AND NAMED XYZ DRIVER AMPLIFIER BOARD. A1XA2 XYZ DRIVER AMPLIFIER BOARD INCLUDES P1, P2, AND P3.

   CONNECTOR A1XA2 IS USED FOR A1AP1,
   CONNECTOR A1XA4 IS USED FOR A1A2P2, AND
   CONNECTOR A1XA5 IS USED FOR A1A2P3.

A1A10

A1A10 DISPLAY MOTHERBOARD, SCHEMATIC DIAGRAM

A3

A3 Digital Storage, Circuit Description

A3 Digital Storage consists of three sections:

Input Section	A3A8 Analog-Digital Converter and A3A9 Track and Hold. This section receives the video and sweep signals, converts them to digital, and transfers the data to the Processor Section.
Processor Section	A3A4 Memory, A3A5 Data Manipulator, A3A6 Main Control, and A3A7 Interface. This section handles all data transfers, data functions, and control for the data storage. The digital storage algorithm is contained in read-only memory (ROM) in A3A6 Main Control.
CRT Driver Section	A3A1 Trigger, A3A2 Intensity Control, and A3A3 Line Generator. This section, under control of the Processor Section, generates beam control signals (X, Y, and Z) to display the memory data.

A3 Digital Storage, Troubleshooting

The troubleshooting information in this section is organized in the following manner.

- "Digital Storage Failure Tests"
  Description of two tests that can be performed to isolate failures in the Digital Storage section.

- "Failure Analysis and Testing Sequence"
  Analysis of the results of the two Digital Storage Failure Tests, and a recommended testing sequence of Digital Storage Assemblies.

- "A3 Digital Storage Block Diagram"
  Overall block diagram for Digital Storage Section, including mnemonics.

Digital Storage Failure Tests

1. INSTRUMENT CHECK LED
   The left INSTR CHECK LED (CHECK LED I) remaining on after Instrument Preset is pushed indicates that a bad bit was detected when the analyzer performed its self check routine. This check routine writes and reads to the read-write memory (RAM) in Digital Storage. To activate this test, press Instrument Preset.
2. DIGITAL STORAGE TEST PATTERN
   The test pattern shown in Figure 1-1 can be used to verify the existence of a failure. This

pattern can be generated independently of the main processor in the RF Section (Al5 Controller). To enable the test pattern:

a. Jumper A3A6TP3 and A3A6TP6. (Turns on the test ROMs.)

b. Push A3A7S1 to initialize.

If troubleshooting without the RF Section or with the Analyzer Bus Interconnect cable W31 disconnected, A1A8TP1 and A1A8TP2 must be jumpered to turn on the power supplies.

If the CRT remains blank, A1A6TP6 and A1A6TP7 may have to be jumpered to inhibit the CRT disable line controlled by the Al5 Controller.

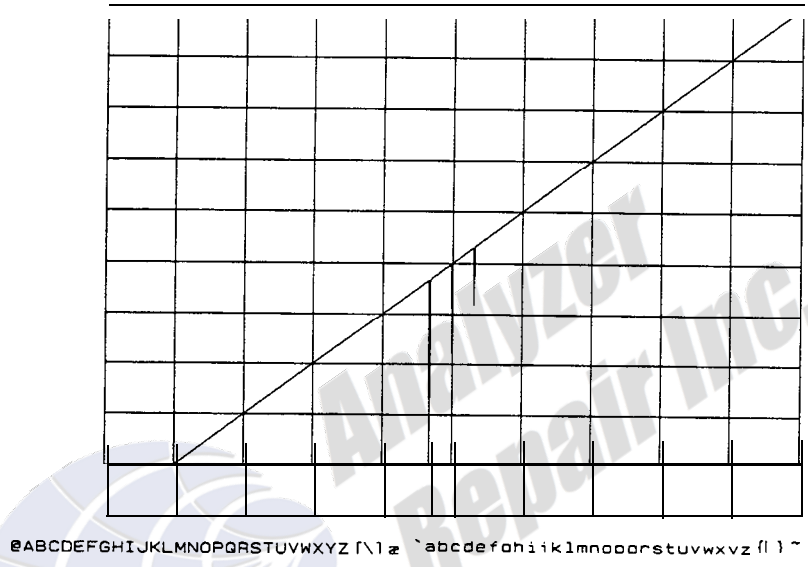

Figure 1. Typical Digital Storage Test Pattern

Failure Analysis and Testing Sequence

INSTR CHECK LED I and the Digital Storage test pattern can be used together to determine in what area of the Digital Storage Section a failure exists. See "Digital Storage Failure Tests" in this chapter. Failure symptoms (and troubleshooting information for each) are as follows:

Table l-l. Digital Storage Test Pattern

	Correct Test Pattern	Incorrect/No Test Pattern
CHECK LED I ON	See (2)	See (1)
CHECK LED I OFF	See (4)	See (3)

Analyzer Repair Inc.

1. IF INSTR CHECK LED I remains on and no test pattern can be obtained, the following assemblies should be checked in the order shown.

   A3A6 Main Control
   A3A7 Interface
   A3A5 Data Manipulator
   A3A4 Memory
   A3A2 Intensity Control
   A3A8 Analog-Digital Converter
   A1A2 XYZ Driver Amplifier or
   A1A2 Z-Axis Amplifier
   A1A4 X Deflection Amplifier
   A1A5 Y Deflection Amplifier
   Al5 Controller

2. If INSTR CHECK LED I remains on but the test pattern is correct, check the following assemblies in the order shown.

   A3A7 Interface
   A3A4 Memory
   A3A6 Main Control
   Al5 Controller

3. If INSTR CHECK LED I is off but the test pattern is incorrect, first check the A3A3 Line Generator and A3A2 Intensity Control before checking the entire Digital Storage Processor.

4. If INSTR CHECK LED I is off and the test pattern is correct, but the CRT and characters come up incorrectly after a normal Instrument Preset, check the System ROMs first. A "long POP" check of the Al5 Controller in the RF Section should also be performed.

CRT Display Test Programs

Note

For all tests, unless otherwise specified: Test Point A3A6TP3 must be jumpered to A3A6TP6. This turns on the Test ROMs. After all jumpers for a test are connected, momentarily push switch A3A7S1 to initialize.

The left INSTRUMENT CHECK LED should remain on ***when the test ROMS are enabled and instrument preset is pushed.***

Test Pattern

Generates a test pattern with graticule, a diagonal line, characters, and three vertical lines representing the ADC converter outputs of the negative peak, sample, and positive peak detectors.

The IOB Interface circuitry and the System ROM are not used in generating the Test Pattern.

Free Run Check

A3A6E1 removed	disables feedback from the program ROM to the Branch Length Adder.
A3A6TP8 grounded	disables qualifier feedback.

A3A6TP5 disables interrupt and return inputs to the State Machine Controller. The BS (Block Switch) line is forced to toggle at a 4 MHz rate.

The program addresses decrements in a binary sequence through all possible addresses with the BS line toggling at 4 MHz, SO at 2 MHz, S1 at 1 MHz, and so on. This checks the A3A6 Main Control assembly, its ROM, Pipeline Registers, flip-flops and control pulses outputs, and the A3A7 I/O Port Decoder. To check the System ROMs, the same test setup is used but the A3A6TP3 to A3A6TP6 jumper is removed to re-enable the System ROMs outputs.

This test requires that the 8 MHz clocks, CLK and LCLK, and the initialize signal, LTON from A3A7, be working.

This test also requires that a basic "kernel" be running. This includes part of the State Machine Control (F) and the loop consisting of the Link Register, State Register, and Branch Length Adder on A3A6. See "A3A6 Main Control, Troubleshooting" to troubleshoot this circuitry.

Test Program 1

A3A6TP8 grounded	disables qualifier feedback.
A3A6TP7 grounded	forces state machine interrupt high.
A3A5TP2 grounded	disables the Register RAM outputs.

This program generates the pattern to test the A3A5 Data Manipulator, its Accumulator, Control Decode logic, Pipeline Registers, and parts of its ALU, Constant ROM, and Multiplexer Bus Drivers. This is the test that exercises the Digital Storage Bus with all feedback from it disabled.

Test Program 2

A3A6TP8 grounded	disables qualifier feedback.
A3A6TP7 grounded	forces state machine interrupt high.

This program is the same as Test Program 1 except that the Register RAM outputs are enabled on the A3A5 Data Manipulator assembly. Since there is now feedback from the Accumulator through the Register RAM, a bad bit will make all higher order bits appear bad; so when probing the bus lines, the low order bits should be verified first and then higher order ones. The program generates various patterns that are written into and read from register RAM location 0; it also selects all the qualifier inputs on A3A7 in both a low and a high state; and it exercises all the bits in the branch length word on the A3A6 Main Control assembly.

This program is used to verify the Branch Length Adder on A3A6 Main Control assembly when A3A6E1 jumper is replaced. On A3A5 it tests the Register RAM, ALU A inputs, and the multiplexer inputs from the RAMs. And finally, it checks the qualifier select circuitry on A3A7, so that the qualifier feedback can be used in generating the following test programs.

Test Program 3

A3A7TP6 grounded	test qualifier bit read by program.
A3A2R12 LL FULL CW	the long line threshold on A3A2 is adjusted fully clockwise so that the normal interrupt, INTR, is always a 20 μs period, independent of the line generator.

This program uses the Register RAM location 0 and the qualifier verified in Test Program 2 to generate a complete pattern test of all the Register RAM locations and Constant ROM

words on A3A5. A pattern is also output to the X and Y line generator registers on A3A3. The program does not read any input ports; Multiplexer Bus Drivers on A3A5 are the only talkers on the Digital Storage data bus.

Test Program 4

A3A7TP6 jumpered to A3A7TP3 test qualifier bit
A3A2R12 LL FULL CW

This is the overall check program used to test all the Digital Storage input ports. The program generates the signals to check the memory, IOB data, IOB address, LTSTA, LTSTB, and ADC inputs on the bus. For each input, a clock is selected corresponding to each input putting data on the bus. This is done by positioning the jumper plug at the proper position in the IC socket A3A7J1. For example, to check Memory, the jumper is put at pin 3, connecting pin 3 to pin 12. This program requires that the A3A5 Data Manipulator assembly be working and the Digital Storage bus be good.

Test Program 5

A3A7TP6 jumpered to A3A7TP4 test qualifier bit
A3A2R12 LL FULL CW
A3A1 removed

This program is used to generate a simple ramp waveform for the X and Y Line Generators and also to generate simple repetitive control signals to the A3A9 Track and Hold assembly. It is also used to check the Buffer on the A3A5 Data Manipulator assembly. The X and Y ramp waveforms are 20 ms long when A3A2R12 is fully CW (long line) and 5 ms long when A3A2R12 is fully CCW (short line). See A3A9 Troubleshooting for a diagram of the A3A9 control signals. A3A1 is removed to let the HSWP line go high, for A3A9 troubleshooting.

Test Program 6

A3A7TP6 jumpered to A3A6TP2 test qualifier bit
A3A2R12 LL FULL CW
A3A1 removed

This program is almost identical to Test Program 5, except that the HOLD line to A3A9 is normally high, going low to reset the hold capacitor and peak detectors only every 80 ms. This can be used to check hold times. In addition, the CRT trace will be in the blink mode, blinking once a second.

Figure l-2 shows the CRT displays for the various Test Programs. They are not meant to verify that each test is running correctly, but rather to assure you that the test program is cycling. With caution, they can also be used to do some short-cutting in the overall Digital Storage troubleshooting procedure.

For example, the memory check, the IOB interface checks, the ADC check, Test A and Test B checks should not be done if the Test Program 4 trace is not on the CRT. On the other hand, if the traces for Test Programs 3, 4, and 5 appear correct, then the Main Control and Data Manipulator checks could be temporarily bypassed and the memory or IOB interface checks performed. (However, if these checks have bad inputs or the fault cannot be found, then the A3A6 Main Control and A3A5 Data Manipulator assemblies must be verified as shown in the complete Digital Storage troubleshooting procedure.)

Analyzer Report Inc.

TEST PROGRAM 3

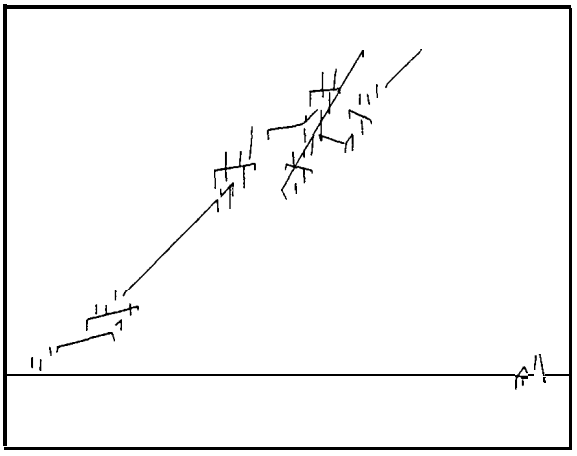

TEST PROGRAM 4

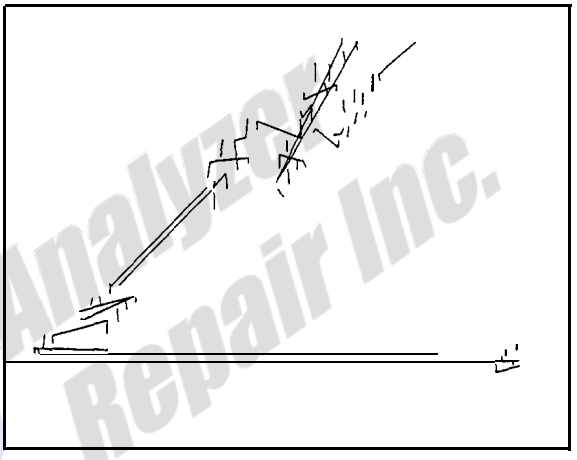

TEST PROGRAM 5 AND 6

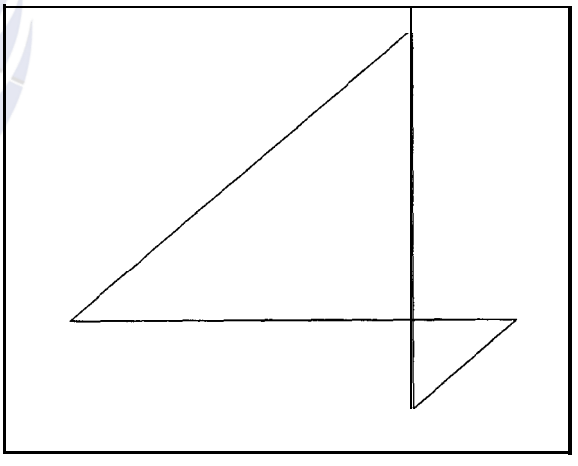

Analyzer Repair Inc.

Figure 2. Digital Storage Test Program CRT Displays

A3 Digital Storage Mnemonic Table

Mnemonic	Description	Mnemonic	Description
18.4MHZ LO	18.4 MHz Local Oscillator Signal	FSZ	Fast Sweep Z Axis
1MHZ	1 MHz ADC Clock	HLDX	Hold X Position (Sample and Hold Control)
21.4MHZ	21.4 MHz IF Signal	HLDY	Hold Y Position (Sample and Hold Control)
3MHZ	3 MHz IF Signal	HOLD	Track and Hold Control
A LOG	Log Expand Control	HSWP	HIGH=Sweeping
A0-A11	Accumulator Bus Bits 0 through 11	ICLK	Indicator Clock (Front-Panel LEDs)
A10dB	Attenuation Controls		
A20dB		INSELA	Input Selection Bit A
A2dB		INSELB	Input Selection Bit B
A4dB		INTG	Integrator Control
A8dB		INTR	Interrupt
ADR0-ADR3	INstrument Bus Address Bits 0 through 3	IOB0-IOB15	Instrument Bus Data Bits 0 through 15
AUX BLANK	Auxiliary Blanking Output	IOC	I/O Port Input/Output Control
4ux z	Auxiliary Z Axis Output		
AVdB	Attenuation Control	KS0-KS3	Constant Selection Bits 0 through 3
3 LOG	Log Expand Control		
30-Bll	Digital Storage Bus Data Bits 0 through 11	L0-L7	Link State Bus Bits 0 through 7
BL0-BL6	Branch Length Bus Bits 0 through 6	LADC	LOW=Enable ADC Output
		LBLANK	LOW=Blanking Control
3LINK	Blink CRT Display Control	LCLK	Inverted CLK
3RIGHT	Bright CRT Display Control	LCLRSA	LOW=Clear Stroke Address
3s	Block Switch Control	LDCHAR	Load Character Register
BW5	Bandwidth Controls	LDEXP	Load Expand Register
BW63		LDMEN	Data Manipulator Output Enable
BW68			
BW7		LDMAR	Load Memory Address Register
CE	Memory Chip Enable	LDMDR	Load Memory Data Register
CHAR	Character Mode Display Control	LDRMP	Load Ramp Register
		LDSR	LOW=Digital Storage Ready
CLK	I MHz System Clock	LDX	Load X Position Register
CRT DSBL	CRT Disable Control	LDY	Load Y Position Register
DX	Delta X Position	LFSEN	LOW=Fast Sweep Enable
DY	Delta Y Position	LG10	Linear Gain Controls
DIM	Dim CRT Display	LG20	
DOTEN	Dot Enable	LGCLK	100 kHz Line Generator Clock
F0-F11	Function Bus Bits 0 through 13	LGX	Line Generator Horizontal Signal
FC0-FC3	Data Manipulator Function Control Bits 0 through 3	LGY	Line Generator Vertical Signal
FREQ ZERO	Frequency Zero Control	LINCRSA	ncrement Stroke Address
FS	Fast Sweep Mode	LINTG	LOW=Integrator Control
FSOUT	Fast Sweep Output	LL	Long Line

A3 Digital Storage Mnemonic Table (continued)

Mnemonic	Description
LLGBLANK	LOW=Line Generator Blanking Control
LLL	LOW=Long Line
LMEMEN	LOW=Enable Memory Output
LOG/LIN	Log/Linear Control
LQ	LOW=Selected Qualifier
LROMEN	LOW=ROM Enable
LRSTO	LOW=Reset Trigger Occurred
LRTN	LOW=Enable Interrupt Return
LRTRC	LOW=Retrace Signal
LTIO	LOW=IF-Display Section I/O Strobe
LTON	LOW=Turn On
LTSTA	LOW=Input Test A Data
LTSTB	LOW=Input Test B Data
LWRITE	Memory Write Control
LZERO	Output of Zero Check on ALU Result
MA0-MA11	Memory Address Bus Bits 0 through 11
NS0-NS7	Next State Bus Bits 0 through 7
OS10	Offset Gain Controls
OS20-1	
OS20-2	
PENLIFT	Recorder PENLIFT Control
POS	Sign of ALU Results
PSQ-PS3	I/O Port Selection Bits 0 through 3
QS0-QS3	Qualifier Selection Bits 0 through 3

Mnemonic	Description
R0-R11	Ram Bus Bits 0 through 11
RBWA	Resolution Bandwidth Control
RBWB	
RBWC	
RBWD	
REC CAL	Recorder Calibrate
REC ZERO	Recorder Zero
RMQ-RM2	Ram Register Select Bits 0 through 2
RSEN	Reset Peak Detectors Enable
RSHS	Reset High Sweep
S0-S11	Source Bus Bits 0 through 11
S0-S7	State Bus Bits 0 through 7
SG10	Step Gain Controls
SG20-1	
SG20-2	
SMPL	Sample
STROK8	Stroke 8 of Current Character
SWITCH	Up/Down Converter Control
VBWA	Video Banwidth Controls
VBWB	
VBWC	
VBWD	
VIDEO	Video Signal
X	Horizontal Signal to CRT
Y	Vertical Signal to CRT
Z	Intensity Signal to CRT

Analyzer Repair Inc.

IF-DISPLAY SECTION

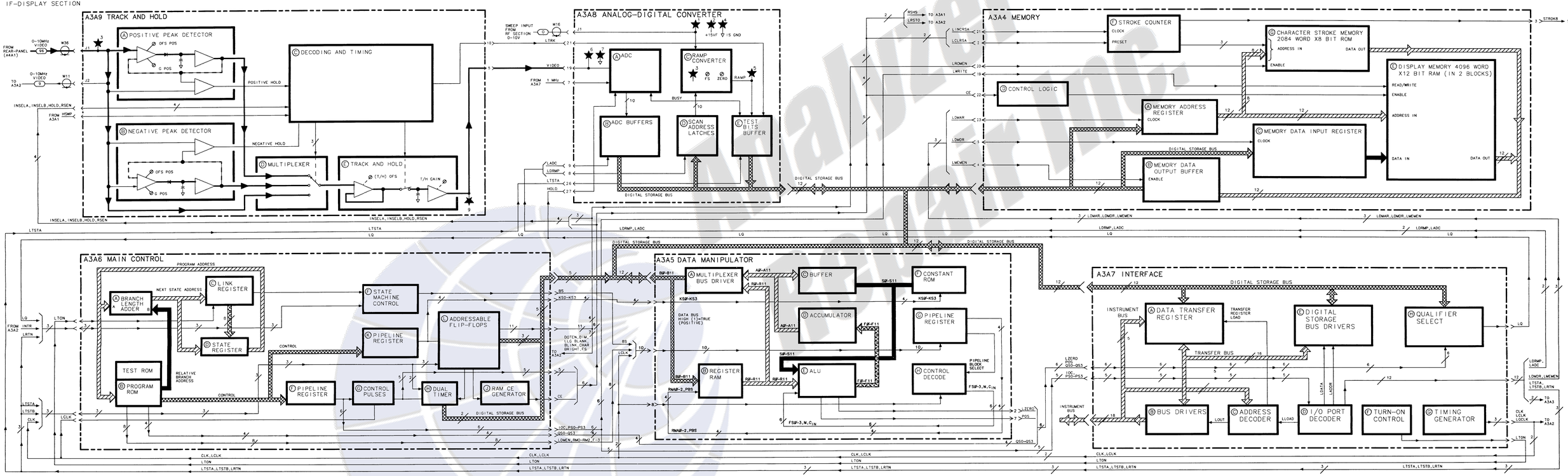

A3 DIGITAL STORAGE, BLOCK DIAGRAM

A3A1

A3A1 Trigger, Circuit Description

A3A1 Trigger contains circuits which generate the HSWP signal used by other assemblies in the A3 Digital Storage section and in the spectrum analyzer RF section. Instrument Bus commands set the HSWP line high or low, or program HSWP to go high when a sweep trigger occurs. Trigger sources that may be selected are: the line, the video signal, or an external trigger input from the instrument rear panel. A3A1 Trigger contains circuits that select and process trigger signals. It also contains the Fast Sweep Generator, which produces a linear ramp voltage (0 V to approximately +2.2 V) used as a horizontal sweep for the CRT display. This sweep ramp is used only with FREQUENCY SPAN=0 Hz. (It is not used to sweep the RF Section frequency.)

The fast sweep ramp is applied to A1A4 X Deflection Amplifier or A1A2 XYZ Driver Amplifier when selected by an analog multiplexer in A3A2 Intensity Control. The fast sweep time may be varied in a 1, 2, 5 sequence from 10 ms (1 ms/div) to 1μs (100 ns/div). Trigger circuitry used for the triggering of RF Section sweeps (by HSWP) is used to trigger fast sweeps.

A3A1 also contains the Recorder Penlift Driver circuit, which is part of the High Sweep Control.

High Sweep Control Ⓑ

The High Sweep Control circuit generates HSWP, which is a TTL open-collector signal that is used by A3 Digital Storage to control signal tracking and conversion. HSWP is also used in the instrument RF Section to control the Sweep Generator circuitry. The sweep ramp is in progress when HWSP is high and is stopped (at any point during the sweep) when HSWP is low. The RF Section can also pull HSWP low to stop the sweep under certain conditions. For example, when a front-panel key is pressed, the main processor in the RF Section pulls HSWP low (on Al2 Front Panel Interface) to immediately stop the sweep, then programs HSWP low (on A3A1 Trigger) with an Instrument Bus command before servicing the front-panel request. HSWP must be set high again (on A3A1 Trigger) for the sweep in the RF Section to resume.

HSWP is used directly to light the green front-panel SWEEP LED on the IF-Display Section. This LED provides a very quick method of checking for activity on the HSWP line.

HSWP Generation

For HSWP to be high, flip-flop U12A pin 6 must be low. Inverter U7A buffers U12A and provides the open collector drive for the HSWP line. U12A is set and cleared by the Instrument Bus and can be cleared by the RSHS signal from A3A6 Main Control. To set HSWP, Instrument Bus bits 14 and 15 are set high, Address 50 is selected, and address decoder U18 is enabled by LTIO (the IF-Display Section address strobe). U18, pin 13 goes low, which clocks the U4A and U4B Q outputs high. The positive-going transition at the U4B output triggers a pulse of approximately 500 μs at U9A pin 4. At the end of this pulse,

U9B generates a narrow (50 ns) pulse that clocks U12A and U12B. This causes U12A pin 6 to go low and HSWP to go high. (Note that HSWP is set high approximately 500 μs after occurrence of the Instrument Bus SET command. This time delay allows Al5 Controller to perform certain functions before the sweep starts.)

To clear HSWP, Instrument Bus 13 is set high, Address 50 is selected, and (when the IF-Display Section address strobe occurs) U12A, U12B, U4A, and U4B are cleared. HSWP may also be cleared by other assemblies in the A3 Digital Storage when the RSHS line goes low.

In Fast Sweep mode (sweep time setting $\leq$10 ms), HSWP is no longer used to control the RF Section sweep ramp, since the spectrum analyzer is not sweeping the RF Section frequency. It is normal to see the green front-panel sweep LED turn off for these settings, even though the CRT trace is sweeping.

Free Run Mode (for Sweep Time $\geq$20 ms)

When the RF Section is in Free Run mode with sweep time settings $\geq$20 ms, the sweep is started when the Instrument Bus sets HSWP. The sweep is stopped by the RSHS line from A3A6 Main Control or by a CLEAR command from the Instrument Bus. Al5 Controller controls the time from the end of one sweep to the beginning of the next sweep (sweep dead time).

Line, Video, and External Triggers (for Sweep Time $\geq$20 ms).

The RF Section can direct A3A1 to set HSWP high when a line, video, or external trigger occurs. If Instrument Bus line 14 is high and U18 is strobed with Address 50, U18 pin 13 will go low, setting U4A pin 9 high, which triggers U94. At the end of the pulse generated by U9B, U12B pin 9 will be clocked high, placing a high at the data input (pin 2) of U12A. The output (pin 6) of trigger multiplexer U16 in the Trigger generator will then cause U12A to be clocked on a negative-going transition of the selected trigger input. Refer to "Fast Sweep Generator" in this chapter.

Recorder Pen Lift Driver

In sweep time settings $\geq$20 ms, the Recorder Pen Lift Driver supplies the PENLIFT signal to the rear-panel PENLIFT connector. PENLIFT may also be used to control blanking of an external CRT display.

PENLIFT is a 0 V to 15 V signal that lowers the recorder pen when an RF Section sweep is in progress (HSWP is high, PENLIFT is 0 V) and lifts the pen when a sweep is not in progress (HSWP is low, PENLIFT is 15 V). Decoder U3A is a noninverting buffer that drives Q15 from the HSWP line.

Sweep Trigger Ⓕ

The Sweep Trigger circuit produces triggers for all sweep times. It contains the video, external, and line trigger circuits, the fast sweep Free Run Oscillator, the trigger multiplexer, and the fast-sweep Auto Trigger circuit. A valid trigger for the Fast Sweep Generator or the High Sweep Control circuit is produced by a negative-going transition at the selected input of trigger multiplexer U16. This trigger signal will start a sweep only if the Fast Sweep Control and High Sweep Control circuits are in the proper states.

Video Trigger

Video Trigger comparator U13 generates a negative-going transition when the VIDEO signal rises above the voltage at U13 pin 2, which depends on the position of the front-panel TRIGGER LEVEL control. R49, R50, and R51 divide the TRIG LEVEL voltage (0 V to +5.1 V) to approximately -0.1 V to +2.1 V at U13 pin 2. The LOW FAST SWEEP signal, connected to the strobe inputs (pins 5 and 6) of U13, disables the output of U13 in Fast Sweep mode when the fast sweep ramp is being generated. R52 provides hysteresis for U13, and CR1 protects U13 from excessive input voltage on the VIDEO line. The +10 V and -10 V supply voltages for U13 are derived through VR4 and VR5.

External and Line Triggers

The EXT TRIG input from the IF-Display Section rear panel is applied to buffer/inverter Q14 through divider R61 and R62. When EXT TRIG rises above approximately +1.4 V, Q14 saturates and U15C pin 9 goes low, causing U16 pin 3 to go low, producing a trigger.

A voltage, resistively divided from a winding of the IF-Display Section line transformer, is buffered by Schmitt trigger inverter U15A, the output of which is applied to U16 pin 2, the line trigger input of the trigger multiplexer. Negative-going transitions at U16 pin 2 are valid line triggers.

Free Run Mode (Sweep lime ≤ 10 ms)

In Fast Sweep mode, during the fast sweep dead time, U11C pin 8 is high. This causes U15B to oscillate at a rate (determined by R59 and Cll) of approximately 500 kHz. Negative-going transitions at U15B pin 6 produce triggers in the Fast Sweep, Free Run mode. U15B is gated off during the fast sweep ramp. Note that the Free Run Oscillator is not used to trigger sweeps in sweep times ≥20 ms. (See High Sweep Control circuit description.)

Fast Sweep Auto Trigger

When the EXT or VIDEO key is pressed and the sweep time is 10 ms or less (Fast Sweep mode), a fast sweep ramp will be started automatically about 25 ms after the start of the last fast sweep if no video or external trigger occurs first. If SHIFT EXT or SHIFT VIDEO keys are pressed, fast sweep triggering will be in Normal mode. In Normal mode, no fast sweep will be started until a trigger occurs. The CRT graticule and characters will not be refreshed until a fast sweep has occurred.

Fast Sweep Auto Trigger Circuitry

In Auto Trigger mode, the Instrument Bus sets U5 pin 12 High. U1A pin 1 goes low when the fast sweep ramp begins, triggering a 25 ms (low) pulse at U1A pin 4. If another fast sweep ramp is started within 25 ms of the beginning of the previous fast sweep ramp, U1A will be retriggered, and U1A pin 4 will not go high for at least another 25 ms. If triggers cease to occur, U11D pin 11 will go high 25 ms after the last fast sweep. This causes trigger multiplexer U16 to select the output of the Free Run Oscillator in either Video or External mode, triggering a sweep. Auto triggering will not occur in sweep times ≥20 ms, because in this case the Auto Trigger circuitry is disabled by the FAST SWEEP ENABLE line to U11B pin 5.

If [SHIFT) EXT or (SHIFT] VIDEO keys are pressed, U5 pin 12 will be low, preventing automatic triggering in the absence of a video or external trigger.

Fast Sweep Time Control Ⓐ

Data on Instrument Bus lines 11 through 14 specify the fast sweep generator sweep time. This data is latched into hex D flip-flop U6 when Address 51 is strobed. (Refer to the table, Note 6 on the schematic, for coding of the sweep time control lines.) Data on Instrument Bus line 15 is latched into U6 with the four sweep time bits (IOB11—IOB14) and enables fast sweep generator operation.

Switchable Current Source

Current for the generation of the fast sweep ramp is supplied by Q13. Op amp U8 regulates (through R6 and R7) the emitter voltage of Q13 to keep it equal to the reference voltage at U8 pin 3.

Q6 controls the reference voltage by switching R2 in or out of the voltage divider circuit, which is made up of R1, R2, and R3. The voltage difference between Q13 emitter and +15 VF1 is set at 2 V when Q6 is off and 4 V when Q6 is on. The voltage difference is held across a switchable resistance between Q13 emitter and +15 VF1. FET switches Q7, Q8, and Q9 connect resistors in parallel with R14 to change the current supplied by the current source. When Q7, Q8, and Q9 are off, R14 sets Q13 collector current. In certain sweep times, Q9 is turned on by U2C. (Refer to the table on the schematic, Note 6.) This places R11 in parallel with R14, increasing the current by a factor of 5. Similarly, R12 or R13 may be switched in to increase current by factors of 10 and 50 respectively. Q7, Q8, and Q9 are controlled by open-collector drivers U2B, U2A, and U2C. The FET switches are on when the FET gate voltage is high (+15 V) and off when the FET gate voltage is low (approximately +0.2 V). U3B decodes the sweep rate control lines from U6 and controls U2A, U2B, and U2C.

Fast Sweep Generator Ⓒ

To produce the fast sweep ramp for sweep times ≤100 μs, current from Q13 charges timing capacitor C4. For sweep times of 200 μs to 10 ms, Q11 is turned on, placing timing capacitor C5 in parallel with C4, increasing the sweep time by a factor of 100. C4 and C5 (if it is in the circuit) are discharged by Q10 and Q12 at the end of the sweep.

Discharge Switch

When no sweep is in progress, the output of open-collector inverter U7D is high (+5 V), and current through R30 and R31 flow into Q10 and through CR6 into Q12. In addition, current flows from Q13 into Q12. At the start of a fast sweep ramp, U7D pin 8 goes low, and the voltage at the anode of CR6 and the emitter of Q10 is pulled slightly negative by R32. CR6 becomes reverse biased, and Q10 turns off, turning Q12 off. Current from the collector of Q13 now flows into timing capacitors C4 and C5, and the sweep ramp begins. When the end of the sweep ramp (+2.2 V) is detected by the Fast Sweep Control circuit, U7D pin 8 goes high (about +5 V), turning Q10 on. This turns Q12 on, and it begins to discharge C4 and C5. Q12 continues to discharge the timing capacitors until CR6 becomes forward biased. At that time, the circuit reaches equilibrium, holding the sweep ramp at near 0 V, with the offset adjusted by R34.

Fast Sweep Buffer Amplifier

Op amp U14 is connected as a unity gain buffer amplifier, which provides the low impedance fast sweep ramp output (FS OUT). FS OUT is applied to the X-axis scan multiplexer in A3A2 Intensity Control.

Fast Sweep Control Ⓓ

The Fast Sweep Control contains circuitry for end of sweep detection and controls fast sweep dead time, and fast sweep triggering.

End of Sweep Detection

When the sweep ramp reaches about +2.2 V, Q5 conducts and turns Q4 on. When the collector of Q4 goes low, U1B pin 5 produces a pulse whose length is the dead time. U10A and U10B are cleared when U10A pin 5 goes low, and timing capacitors C4 and C5 are discharged by the Discharge Switch in the Fast Sweep Generator. Voltage divider R19 and R20 set the level at which Q5 senses the end of the sweep ramp. (Note that the fast sweep ramp ends beyond the right-hand edge of the CRT.) The LRTRC line from U10A pin 5, which is high during the sweep, supplies the retrace blanking signal to A3A2 Intensity Control.

Fast Sweep Dead Time

Multivibrator U1B controls the sweep dead time. U1B is triggered at the end of the fast sweep ramp and holds U10A and U10B cleared for a time that is determined by C7, R24, and R25. This prevents the triggering of further ramps for the length of the pulse from U1B pin 5. The length of the dead time is about 15 μs for sweep times from 1 μs through 100 μs and about 120 μs for sweep times from 200 μs through 10 ms. The ST 100 line (from U6 pin 12 in the Fast Sweep Time Control circuit) controls the length of the sweep dead time by switching the U1B timing resistors with transistor switch Q3. In sweep times of 10 ms through 200 μs, Q3 is off and the dead time, set by C7 and R24, is 120 μs. In sweep times of 100 μs through 1 μs, Q3 is on, placing R25 in parallel with R24 to decrease the dead time to 15 μs. C6 and R23 supply additional base drive to Q4 at the end of the sweep to insure triggering of U1B.

Fast Sweep Triggering

Flip-flops U10A and U10B control the state of the fast sweep generator. U10A controls the Discharge Switch through inverter/buffer U7D. At the end of a fast sweep, both U10A and U10B are held cleared by the dead time circuit (U1B and U7F). Following the dead time, a trigger from U16 pin 5 causes U10B pin 7 to go low. This causes U10A pin 5 to go high, which turns off the Discharge Switch and starts a sweep ramp. This can occur only if FS EN is high. If FS EN is low, the J and K inputs of U10B are held low and a trigger will not set U10B.

Fast Sweep Multiplexing

In Fast Sweep mode, the X output of A3A3 Line Generator and the fast sweep ramp must be multiplexed to A1A4 X Deflection Amplifier or A1A2 XYZ Driver Amplifier to produce a display consisting of the graticule and characters with the fast sweep ramp and the analog video signal. The video signal from A4A1 Video Processor is multiplexed to A1A5 Y Deflection Amplifier or A1A2 XYZ Driver Amplifier when the fast sweep ramp is multiplexed to A1A4 or A1A2. The X and Y multiplexers are located in A3A2 Intensity Control.

In Fast Sweep mode, the output from A3A3 is applied to the CRT deflection amplifiers following the completion of at least one fast sweep ramp.

Fast Sweep Intensity Control Ⓔ

To provide uniform intensity between the fast sweep trace and the other information displayed on the CRT, the Fast Sweep Intensity Control circuit generates a voltage to control the CRT beam intensity (Z-axis) when the fast sweep ramp is multiplexed in.

The FSZ voltage is dependent on the duty cycle of the fast sweep ramp; that is, the ratio of time during which the ramp is in progress to the sum of dead time and sweep time. FSZ varies from about 150 mV (low beam intensity) for high duty cycle operation to about 2 V (high beam intensity) for very low duty cycle operation.

The LRTRC line, high during the fast sweep ramp, provides a digital waveform which is averaged and inverted by Q2, C15, and associated circuitry, providing an output voltage to Q1 that is dependent on the average value of the LRTRC signal. Q1 is an emitter follower which provides drive when the FSZ signal is above ≈150 mV for low duty cycle sweep operation (less than 20 percent). when the voltage at the collector of Q2 is below +0.7 V (high duty cycle operation), the base-emitter junction of Q1 is off, and the FSZ voltage is held at about 150 mV by voltage divider R71 and R72.

A3A1 Trigger, Troubleshooting

Much of the circuitry on the A3A1 Trigger can be tested without removing the assembly from the instrument. First key in Instrument Preset, (FREQUENCY SPAN) 0 Hz and (SWEEP TIME) 10 ms. Noise should be displayed at approximately 2.5 divisions up from the bottom graticule. If the display is blanked, try (LINE) and then (VIDEO) triggering.

The waveforms shown on the service sheet for TP2 and TP5 are valid only in the (FREE RUN) and Normal mode ((SHIFT) (VIDEO), [SHIFT) (EXT)). The Fast Sweep time should be equal to the time it takes the ramp at TP5 to sweep from 0 V to +2 V. The oversweep above 2 V is determined by the Sweep-Comparator and is not critical for instrument operation. The dead time when the ramp and LRTRC are low is approximately 15 μs for sweep times less than 200 μs, and 120 μs for sweep times from 200 μs to 10 ms. During the dead time the Free Run Oscillator is on. See Figure l-l for the relationships between the waveforms.

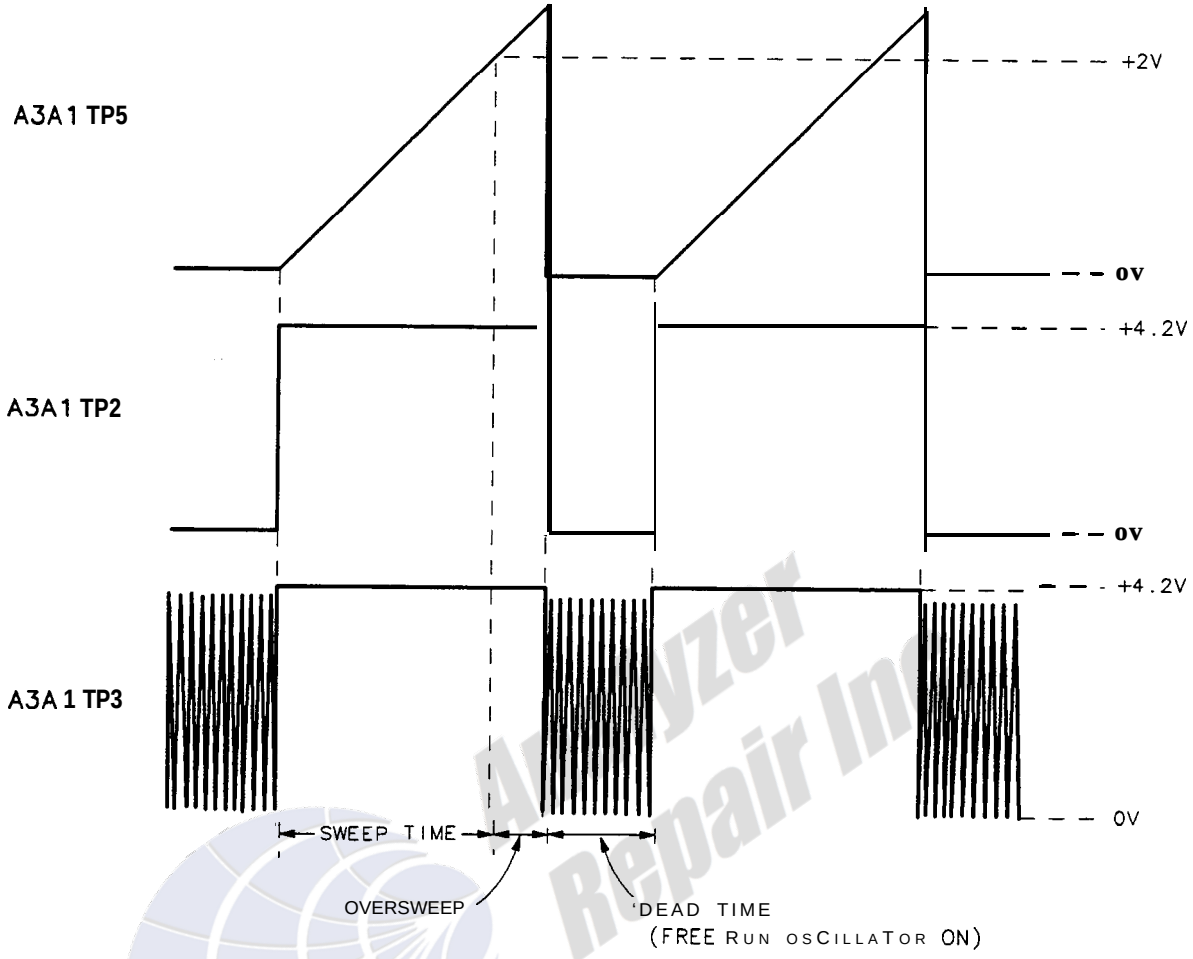

Figure 1. Fast Sweep Time Waveforms

When using (LINE) TRIGGER, the waveforms are similar except for the dead time. Following the minimum dead time period, whenever a negative-going transition occurs at TP3, a ramp is started. When the sweep ends, TP2 goes low and stays low until a negative-going transition occurs at TP3. See Figure **1-2** for the relationships between the LINE TRIGGER waveforms.

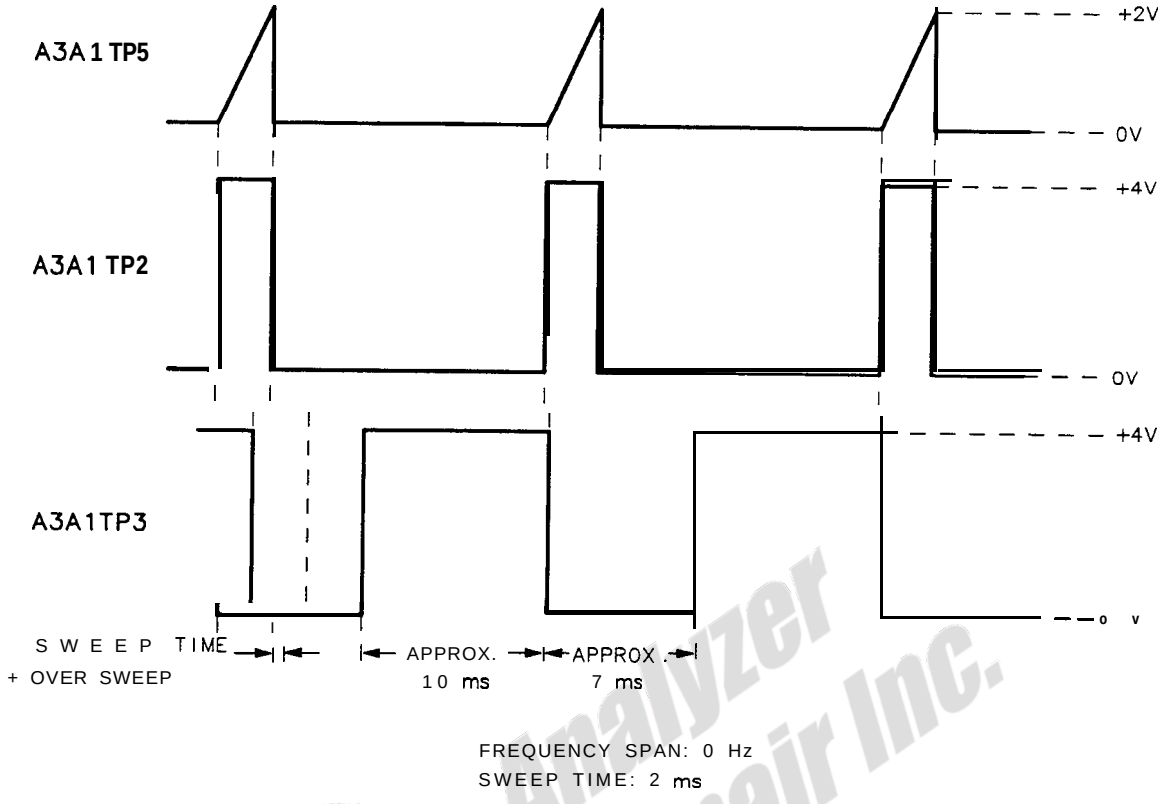

Figure 2. Fast Sweep Line Trigger Waveforms

If noise is used as a video trigger and the TRIGGER LEVEL control is properly set, the (VIDEO) trigger waveforms at TP5 and TP2 will be the same as those in Figure l-l. During the minimum dead time period, the noise signal trigger will be present. If a video trigger does not occur (TRIGGER LEVEL control set fully CW or CCW), then the Auto Trigger circuitry will generate a trigger approximately every 25 ms. TP2 and TP5 will have the relationship shown in Figure l-2. If the voltage at U13 pin 3 is much less than U13 pin 2, then TP3 will be approximately +4 V. If the opposite is true, the waveforms at TP3 and TP2 will be the same.

If no fast sweep is occurring, check TP5 first. If the voltage is greater than +2.6 V, the most likely failure would be in the Fast Sweep Control circuitry. Refer to the circuit description for operation of this functional block. An open Discharge Switch would also cause TP5 to remain greater than +2.6 V for all fast sweep times.

If TP5 is 0 ±20 mV dc and no fast sweeps occur, the Fast Sweep Control circuitry should be examined. Other defective components that would cause the same indications are Q13 and U7D. The Sweep Trigger circuit may also be defective.

The Sweep Trigger circuitry can be tested by tracing the trigger signals through U16 to pin 13 of U10. Try triggering first, as this is the simplest source. A TTL signal at the power line frequency should be present at TP3. U7 pin 12 and the FAST SWP ENABLE line should both be high. Also check for proper trigger signals at TP3.

Sweep times in the fast sweep time mode, being difficult to verify, require a precisely modulated RF source. One quick troubleshooting method is to disconnect the white ⑨ cable from A3A9J2 and connect it between A3A2J2 and A3A2J1. This routes a 200 kHz test

waveform to the VIDEO TRIGGER and CRT Y-Axis Deflection circuits, allowing several of the fast sweep times (10 μsec to 200 μsec) to be checked. Key in INSTR PRESET or [2-22 GHz], [FREQUENCY SPAN] 0 Hz, [SWEEP TIME] 10 μsec, [VIDEO] TRIGGER and adjust the TRIGGER LEVEL control to display a two-cycle waveform; then, increase the [SWEEP TIME] setting to check sweep times up to 200 μsec.

As an alternative, a function generator can be set for a 0.0 to 1.0 V dc, 100 Hz square wave output, and then connected to A3A2J1 to check all the fast sweep times (1 μsec to 10 msec). Key in INSTR PRESET or [2-22 GHz], [FREQUENCY SPAN] 0 Hz, [SWEEP TIME] 20 msec, [VIDEO] TRIGGER and adjust the TRIGGER LEVEL control to display a two-cycle square wave similar to the waveform of Figure 3. Then, decrease the [SWEEP] setting and increase the function generator frequency setting in steps as listed in Table 1, checking that a two-cycle waveform is displayed for each step.

Table 1. Fast Sweep Time Check

Sweep Time	Function Generator Frequency
10 msec	200 Hz
5 msec	400 Hz
2 msec	1 kHz
1 msec	2 kHz
500 μsec	4 kHz
200 μsec	10 kHz
100 μsec	20 kHz
50 μsec	40 kHz
20 μsec	100 kHz
10 μsec	200 kHz
5 μsec	400 kHz
2 μsec	1 MHz
1 μsec	2 MHz

Analyzer Repair Inc.

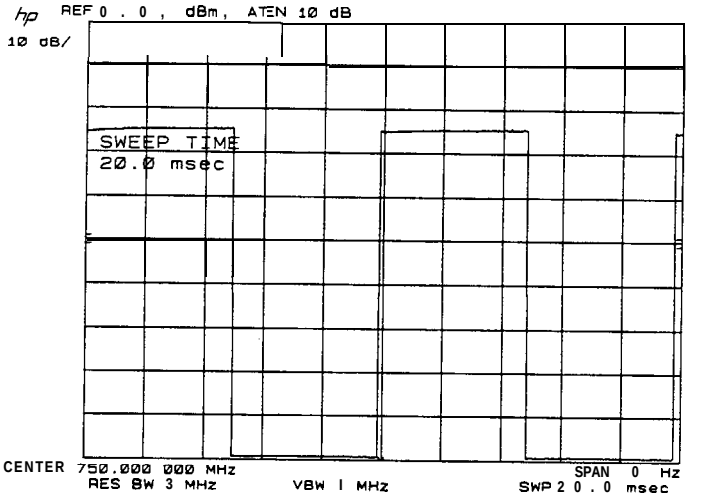

Figure 3. Fast Sweep Time Test Waveform

Analyzer Repair Inc.

HP Part Number 85662-60014

A3A1 Trigger

Reference Designation	HP Part Number	C-D	Qty	Description	Mfr Code	Mfr Part Number
A3A1	85662-60014	E	1	TRIGGER BOARD ASSEMBLY (SERIAL PREFIXES: 2403A-3001A)	28480	85662-60014
A3A1C1	0160-0174	9	1	CAPACITOR-FXD .47UF +80-20% 50VDC CER	04222	SR835E474ZAAH
A3A1C2	0160-0174	9	1	CAPACITOR-FXD .47UF +80-20% 50VDC CER	04222	SR835E474ZAAH
A3A1C3	0160-2252	E	1	CAP-FXD 6.2pF 500 V	52763	
A3A1C4	0140-0233	9	1	CAPACITOR-FXD 480PF +-1% 300VDC MICA 0+7	09023	CD15FD481F03
A3A1C5	0160-4314	7	1	CAPACITOR-FXD .05UF +-1% 200VDC MET-POLY	84411	HEW-415
A3A1C6	0160-2307	4	1	CAPACITOR-FXD 47PF +-5% 300VDC MICA -20/	09023	CD15ED470J03
A3A1C7	0160-0155	E	1	CAPACITOR-FXD 3300PF +-10% 200VDC POLYE	84411	HEW-238M
A3A1C8	0160-4084	E	1	CAP-FXD 0.1uF 50 V	56289	1C20X7R104M050B
A3A1C9	0160-4084	E	1	CAP-FXD 0.1uF 50 V	56289	1C20X7R104M050B
A3A1C11	0160-3456	E	1	CAPACITOR-FXD 1000PF +-10% 1KVDC CER		808-542 X5E 102K
A3A1C12	0180-0197	E	1	CAPACITOR-FXD 2.2UF+-10% 20VDC TA	56289	150D225X9020A2-DYS
A3A1C14	0180-0197	E	1	CAPACITOR-FXD 2.2UF+-10% 20VDC TA	56289	150D225X9020A2-DYS
A3A1C15	0180-0374	3	1	CAPACITOR-FXD 10UF+-10% LOVDC TA	56289	1500106X902082-DYS
A3A1C16	0180-0197	E	1	CAPACITOR-FXD 2.2UF+-10% LOVDC TA	56289	150D225X9020A2-DYS
A3A1C17	3180-0197	E	1	CAPACITOR-FXD 2.2UF+-10% 2DVDC TA	56289	150D225X9020A2-DYS
A3A1C18	3180-0197	E	1	CAPACITOR-FXD 2.2UF+-10% 20VDC TA	56289	150D225X9020A2-DYS
A3A1C19	3180-0197	a	1	CAPACITOR-FXD 2.2UF+-10% 20VDC TA	56289	150D225X9020A2-DYS
A3A1C20	3160-0174	9	1	CAPACITOR-FXD .47UF +80-20% 50VDC CER	04222	SR835E474ZAAH
A3A1C23	0180-0197	E	1	CAPACITOR-FXD 2.2UF+-10% 20VDC TA	56289	150D225X9020A2-DYS
A3A1C27	0160-2055	9	1	CAPACITOR-FXD .01UF +80-20% 100VDC CER		805-504 Y5V 103Z
A3A1C28	0160-2055	9	1	CAPACITOR-FXD .01UF +80-20% 100VDC CER		805-504 Y5V 103Z
A3A1C29	0160-2055	9	1	CAPACITOR-FXD .01UF +80-20% 100VDC CER		805-504 Y5V 1032
A3A1CR1	1901-0535	9	1	DIODE-SCHOTTKY SM SIG		
A3A1CR2	1901-0535	9	1	DIODE-SCHOTTKY SM SIG		
A3A1CR3	1901-0535	9	1	DIODE-SCHOTTKY SM SIG		
A3A1CR4	1901-0535	9	1	DIODE-SCHDTTKY SM SIG		
A3A1CR5	1901-0040	1	1	DIODE-SWITCHING 30V 50MA 2NS DO-35	71468	
A3A1CR6	1901-0179	7	1	DIODE-SWITCHING 15V 50MA 750PS DO-7	27014	FD777
A3A1L1	9140-0114	4	1	INDUCTOR RF-CH-MLD 10UH +-10% .166D-INX.	99800	1537-36
A3A1L2	9140-0114	4	1	INDUCTOR RF-CH-MLD 10UH +-10% .166D-INX.	99800	1537-36
A3A1L3	9140-0114	4	1	INDUCTOR RF-CH-MLD 10UH +-10% .166D-INX.	99800	1537-36
A3A1MP1	1480-0073	6	1	PIN-ROLL .062-IN-DIA .25-IN-LG BE-CU	72962	99-012-062-0250
A3A1MP2	1040-0749	4	1	EXTR-PC BD BRN POLYC .062-IN-BD-THKNS 1-		
A3A1Q1	1854-0882	8	1	TRANSISTOR NPN PD=300MW FT=200MHZ	56289	
A3A1Q2	1854-0882	a	1	TRANSISTOR NPN PD=300MW FT=200MHZ	56289	
A3A1Q3	1853-0281	9	1	TRANSISTOR PNP 2N2907A SI TO-18 PD=400MW	04713	2N2907A
A3A1Q4	1854-0404	0	1	TRANSISTOR NPN SI TO-18 PD=360MW	04713	
A3A1Q5	1853-0281	9	1	TRANSISTOR PNP 2N2907A SI TO-18 PD=400MW	04713	2N2907A
A3A1Q6	1854-0404	0	1	TRANSISTOR NPN SI TO-18 PD=360MW	04713	
A3A1Q7	1855-0020	B	1	TRANSISTOR J-FET N-CHAN D-MODE TO-18 SI	04713	SFE793
A3A1Q8	1855-0020	B	1	TRANSISTOR J-FET N-CHAN D-MODE TO-18 SI	04713	SFE793
A3A1Q9	1855-0020	B	1	TRANSISTOR J-FET N-CHAN D-MODE TO-18 SI	04713	SFE793
A3A1Q10	1853-0034	0	1	TRANSISTOR PNP SI TO-18 PD=360MW	04713	
A3A1Q11	1854-0404	0	1	TRANSISTOR NPN SI TO-18 PD=360MW	04713	
A3A1Q12	1854-0345	B	1	TRANSISTOR NPN 215179 SI TO-72 PD=200MW	04713	2N5179

**Indicates factory-selected value*

HP Part Number 85662-60014
A3A1 Trigger

Reference Designatior	HP Part Number	C D	Qty	Description	Mfr Code	Mfr Part Number
A3A1Q13	1853-0451	5	1	TRANSISTOR PNP 213799 SI TO-18 PD=360MW	0471:	
A3A1Q14	1854-0404	0	1	TRANSISTOR NPN SI TO-18 PD=360MW	0471:	
A3A1Q15	1854-0039	7	1	TRANSISTOR NPN 2N3053S SI TO-39 PD=1W	0471:	2N3053S
A3A1R1	0698-6863	4	1	RESISTOR 1.5371: +-0.25% .125W TF TC=0+-5	19701	5033R
A3A1R2	0698-6867	8	1	RESISTOR 7.35K +-0.25% .125W TF TC=0+-50	19701	5033R
A3A1R3	0698-7794	2	1	RESISTOR 10K +-0.25% .125W TF TC=0+-100	19701	50338
A3A1R4	0757-0279	0	1	RESISTOR 3.16K +-1% .125W TF TC=0+-100	19701	SFR25H
A3A1R5	0757-0279	0	1	RESISTOR 3.16K +-1% .125W TF TC=0+-100	19701	SFR25H
A3A1R6	0757-0279	0	1	RESISTOR 3.16K +-1% .125W TF TC=0+-100	19701	SFR25H
A3A1R7	0757-0279	0	1	RESISTOR 3.16K +-1% .125W TF TC=0+-100	19701	SFR25H
A3A1R8	0757-0279	0	1	RESISTOR 3.16K +-1% .125W TF TC=D+-100	19701	SFR25H
A3A1R9	0757-0279	0	1	RESISTOR 3.16K +-1% .125W TF TC=0+-100	19701	SFR25H
A3A1R10	0757-0279	0	1	RESISTOR 3.16K +-1% .125W TF TC=0+-100	19701	SFR25H
A3A1R11	0698-5573	1	1	RESISTOR 50K +-0.5% .125W TF TC=0+-100	91637	CMF-55-1. T-l
A3A1R12	0698-8014	1	1	RESISTOR 22.3K +-0.5% .125W TF TC=0+-50	19701	5033R
A3A1R13	3698-6840	7	1	RESISTOR 4.07K +-0.5% .125W TF TC=0+-50	19701	5033R
A3A1R14	0698-6217	2	1	RESISTOR 200K +-0.5% .125W TF TC=0+-100	91637	CMF-55-1. T-l
A3A1R15	0757-0416	7	1	RESISTOR 511 +-1% .125W TF TC=0+-100	19701	SFR25H
A3A1R16	0757-0280	3	1	RESISTOR 1K +-1% .125W TF TC=0+-100	19701	SFR25H
A3A1R17	0698-0083	8	1	RESISTOR 1.96K 1% .125W TF TC=0+-100	19701	SFR25H
A3A1R18	0698-3440	7	1	RESISTOR 196 1% .125W TF TC=0+-100	19701	SFR25H
A3A1R19	0757-0443	0	1	RESISTOR 11K +-1% .125W TF TC=0+-100	19701	SFR25H
A3A1R20	0757-1094	9	1	RESISTOR 1.47K +-1% .125W TF TC=0+-100	19701	SFR25H
A3A1R21	0757-0280	3	1	RESISTOR 1K +-1% .125W TF TC=D+-100	19701	SFR25H
A3A1R22	1757-0280	3	1	RESISTOR 1K +-1% .125W TF TC=D+-100	19701	SFR25H
A3A1R23	0757-0280	3	1	RESISTOR 1K +-1% .125W TF TC=0+-100	19701	SFR25H
A3A1R24	0757-0465	6	1	RESISTOR 100K +-1% .125W TF TC=0+-100	19701	SFR25H
A3A1R25	0757-0444	1	1	RESISTOR 12.1K +-1% .125W TF TC=0+-100	19701	SFR25H
A3A1R26	0698-3156	2	1	RESISTOR 14.7K 1% .125W TF TC=0+-100	19701	SFR25H
A3A1R27	0757-0279	0	1	RESISTOR 3.16K +-1% .125W TF TC=0+-100	19701	SFR25H
A3A1R28	3698-0083	3	1	RESISTOR 1.96K 1% .125W TF TC=0+-100	19701	SFR25H
A3A1R29	0757-0280	3	1	RESISTOR 1K +-1% .125W TF TC=0+-100	19701	SFR25H
A3A1R30	0757-0280	3	1	RESISTOR 1K +-1% .125W TF TC=0+-100	19701	SFR25H
A3A1R31	1757-0416	7	1	RESISTOR 511 +-1% .125W TF TC=0+-100	19701	SFR25H
A3A1R32	0698-3156	2	1	RESISTOR 14.7K 1% .125W TF TC=0+-100	19701	SFR25H
A3A1R33	0698-3440		1	RESISTOR 196 1% .125W TF TC=0+-100	19701	SFR25H
A3A1R34	2100-1972	3	1	RESISTOR-TRMR 20K 10% WW SIDE-ADJ 20-TRN	32997	3005P-DM3-203
A3A1R35	0698-3156		1	RESISTOR 14.7K 1% .125W TF TC=0+-100	19701	SFR25H
A3A1R36	0698-3441	3	1	RESISTOR 215 1% .125W TF TC=0+-100	19701	SFR25H
A3A1R37	0698-3445	2	1	RESISTOR 348 1% .125W TF TC=0+-100	19701	SFR25H
A3A1R40	0757-0279		1	RESISTOR 3.16K +-1% .125W TF TC=0+-100	19701	SFR25H
A3A1R41	1698-3156		1	RESISTOR 14.7K 1% .125W TF TC=0+-100	19701	SFR25H
A3A1R42	1757-0438		1	RESISTOR 5.11K +-1% .125W TF TC=0+-100	19701	SFR25H
A3A1R43	0757-1094		1	RESISTOR 1.47K +-1% .125W TF TC=0+-100	19701	SFR25H
A3A1R45	0757-0280		1	RESISTOR 1K +-1% .125W TF TC=0+-100	19701	SFR25H
A3A1R46	0757-0416		1	RESISTOR 511 +-1% .125W TF TC=0+-100	19701	SFR25H
A3A1R47	1757-0416		1	RESISTOR 511 +-1% .125W TF TC=0+-100	19701	SFR25H
A3A1R48	0757-0442		1	RESISTOR 10K +-1% .125W TF TC=0+-100	19701	SFR25H

Indicates factory-selectedvalue

HP Part Number 85662-60014
A3A1 Trigger

Reference Designation	HP Part Number	CD	Qty	Description	Mfr Code	Mfr Part Number
A3A1R49	0757-0289	2	1	RESISTOR 13.3K +-1% .125W TF TC=0+-100	19701	SFR25H
A3A1R50	0683-1555	C	1	RESISTOR 1.5M 5% .25W CF TC=0-900	2M627	R-25J
A3A1R51	0757-0442	9	1	RESISTOR 10K +-1% .125W TF TC=0+-100	19701	SFR25H
A3A1R52	0698-3260	9	1	RESISTOR 464K 1% .125W TF TC=0+-100	19701	SFR25H
A3A1R53	0757-0279	0	1	RESISTOR 3.16K +-1% .125W TF TC=0+-100	19701	SFR25H
A3A1R54	0757-0346	2	1	RESISTOR 10 +-1% .125W TF TC=0+-100	91637	CMF-55-1, T-1
A3A1R55	0757-0346	2	1	RESISTOR 10 +-1% .125W TF TC=0+-100	91637	CMF-55-1, T-1
A3A1R56	0757-0346	2	1	RESISTOR 10 +-1% .125W TF TC=0+-100	91637	CMF-55-1. T-1
A3A1R58	0698-3450	9	1	RESISTOR 42.2K 1% .125W TF TC=D+-100	19701	SFR25H
A3A1R59	0757-0280	3	1	RESISTOR 1K +-1% .125W TF TC=0+-100	19701	SFR25H
A3A1R60	0757-0280	3	1	RESISTOR 1K +-1% .125W TF TC=0+-100	19701	SFR25H
A3A1R61	0757-0280	3	1	RESISTOR 1K +-1% .125W TF TC=0+-100	19701	SFR25H
A3A1R62	0757-0280	3	1	RESISTOR 1K +-1% .125W TF TC=0+-100	19701	SFR25H
A3A1R65	0698-0085	0	1	RESISTOR 2.61K 1% .125W TF TC=0+-100	19701	SFR25H
A3A1R66	0698-3154	0	1	RESISTOR 4.221: 1% .125W TF TC=0+-100	19701	SFR25H
A3A1R67	0757-0290	5	1	RESISTOR 6.19K +-1% .125W TF TC=0+-100	19701	SFR25H
A3A1R68	0698-3160	8	1	RESISTOR 31.6K 1% .125W TF TC=0+-100	19701	SFR25H
A3A1R69	0757-0442	9	1	RESISTOR 10K +-1% .125W TF TC=0+-100	19701	SFR25H
A3A1R71	0698-3447	4	1	RESISTOR 422 1% .125W TF TC=D+-100	19701	SFR25H
A3A1R72*	0698-3449	6	1	RESISTOR 28.71: 1% .125W TF TC=0+-100	19701	SFR25H
A3A1TP1	1251-0600	0	1	CONNECTOR-SGL CONT PIN 1.14-MM-BSC-SZ SQ	27264	16-06-0034
A3A1TP2	1251-0600	0	1	CONNECTOR-SGL CONT PIN 1.14-MM-BSC-SZ SQ	27264	16-06-0034
A3A1TP3	1251-0600	0	1	CONNECTOR-SGL CONT PIN 1.14-MM-BSC-SZ SQ	27264	16-06-0034
A3A1TP4	1251-0600	0	1	CONNECTOR-SGL CONT PIN 1.14-MM-BSC-SZ SQ	27264	16-06-0034
A3A1TP5	1251-0600	0	1	CONNECTOR-SGL CONT PIN 1.14-MM-BSC-SZ SQ	27264	16-06-0034
A3A1U1	1820-1423	4	1	IC MV TTL LS MONOSTBL RETRIG DUAL	01295	SN74LS123N
A3A1U2	1820-1417	6	1	IC GATE TTL LS NAND QUAD 2-INP	01295	SN74LS26N
A3A1U3	1820-1281	2	1	IC DCDR TTL LS 2-TO-4-LINE DUAL	01295	SN74LS139AN
A3A1U4	1820-1112	B	1	IC FF TTL LS D-TYPE POS-EDGE-TRIG PRESET	01295	SN74LS74AN
A3A1U5	1820-1196	B	1	IC FF TTL LS D-TYPE POS-EDGE-TRIG COM CL	01295	SN74LS174N
A3A1U6	1820-1196	B	1	IC FF TTL LS D-TYPE POS-EDGE-TRIG COM CL	01295	SN74LS174N
A3A1U7	1820-0471	D	1	IC INV TTL HEX 1-INP	01295	SN7406N
A3A1U8	1826-0319	7	1	IC OP AMP LOW-BIAS-H-IMPD TO-99 PKG	27014	LF356H
A3A1U9	1820-1423	4	1	IC MV TTL LS MONDSTBL RETRIG DUAL	01295	SN74LS123N
A3A1U10	1820-1212	9	1	IC FF TTL LS J-K NEG-EDGE-TRIG PRESET/CL	01295	SN74LS112AN
A3A1U11	1820-1201	6	1	IC GATE TTL LS AND QUAD 2-INP	01295	SN74LS08N
A3A1U12	1820-1112	B	1	IC FF TTL LS D-TYPE POS-EDGE-TRIG PRESET	01295	SN74LS74AN
A3A1U13	1820-0475	4	1	IC COMPARATOR HS TO-99 PKG	27014	LM306H
A3A1U14	1826-0319	7	1	IC DP AMP LOW-BIAS-H-IMPD TO-99 PKG	27014	LF356H
A3A1U15	1820-1425	6	1	IC SCHMITT-TRIG TTL LS NAND QUAD 2-INP	01295	SN74LS132N
A3A1U16	1820-1298	1	1	IC MUXR/DATA-SEL TTL LS 8-TO-1-LINE 8-IN	01295	SN74LS251N
A3A1U17	1820-1197	3	1	IC GATE TTL LS NAND QUAD 2-INP	01295	SN74LS00N
A3A1U18	1820-1216	3	1	IC DCDR TTL LS 3-TO-8-LINE 3-INP	01295	SN74LS138N
A3A1VR1	1902-3224	1	1	DIODE-ZNR 17.8V 5% DO-35 PD=.4W	04713	
A3A1VR2	1902-3224	1	1	DIODE-ZNR 17.8V 5% DO-35 PD=.4W	04713	
A3A1VR3	1902-3182	3	1	DIODE-ZNR 12.1V 5% DO-35 PD=.4W	04713	
A3A1VR4	1902-0041	4	1	DIODE-ZNR 5.11V 5% DO-35 PD=.4W	04713	

**Indicates factory-selected value*

HP Part Number 85662-60014
A3A1 Trigger

Reference Designatior	HP Part Number	C D	Qty	Description	Mfr Code	Mfr Part Number
A3A1VR5	1902-0041	4	1	DIODE-ZNR 5.11V 5% DO-35 PD=.4W	04713	

Analyzer Repair Inc.

**Indicates factory-selected value*

HP Part Number 85662-60244

A3A1 Trigger

Reference Designation	HP Part Number	CD	Qty	Description	Mfr Code	Mfr Part Number
A3A1	85662-60244	4	1	TRIGGER BOARD ASSEMBLY (SERIAL PREFIX: 3004A)	28480	85662-60244
A3A1C1	0160-0174	9	1	CAPACITOR-FXD .47UF +80-20% 50VDC CER	04222	SR835E474ZAAH
A3A1C2	0160-0174	9	1	CAPACITOR-FXD .47UF +80-20% 50VDC CER	04222	SR835E474ZAAH
A3A1C3	0160-2252	8	1	CAP-FXD 6.2pF 500 V	52763	
A3A1C4	0140-0233	9	1	CAPACITOR-FXD 480PF +-1% 300VDC MICA 0+7	09023	CD15FD481F03
A3A1C5	0160-4314	7	1	CAPACITOR-FXD .05UF +-1% 200VDC MET-POLY	84411	HEW-415
A3A1C6	0160-2307	4	1	CAPACITOR-FXD 47PF +-5% 300VDC MICA -20/	09023	CD15ED470J03
A3A1C7	0160-0155	6	1	CAPACITOR-FXD 3300PF +-10% 200VDC POLYE	84411	HEW-238M
A3A1C8	0160-4084	8	1	CAP-FXD 0.1uF 50 V	56289	1C20X7R104M050B
A3A1C9	0160-4084	8	1	CAP-FXD 0.1uF 50 V	56289	1C20X7R104M050B
A3A1C11	0160-3456	6	1	CAPACITOR-FXD 1000PF +-10% 1KVDC CER		808-542 X5E 102K
A3A1C12	0180-0197	8	1	CAPACITOR-FXD 2.2UF+-10% 20VDC TA	56289	150D225X9020A2-DYS
A3A1C14	0180-0197	8	1	CAPACITOR-FXD 2.2UF+-10% 20VDC TA	56289	150D225X9020A2-DYS
A3A1C15	0180-0374	3	1	CAPACITOR-FXD 10UF+-10% 20VDC TA	56289	150D106X9020B2-DYS
A3A1C16	0180-0197	8	1	CAPACITOR-FXD 2.2UF+-10% 20VDC TA	56289	150D225X9020A2-DYS
A3A1C17	0180-0197	8	1	CAPACITOR-FXD 2.2UF+-10% 20VDC TA	56289	150D225X9020A2-DYS
A3A1C18	0180-0197	8	1	CAPACITOR-FXD 2.2UF+-10% 20VDC TA	56289	150D225X9020A2-DYS
A3A1C19	0180-0197	8	1	CAPACITOR-FXD 2.2UF+-10% 20VDC TA	56289	150D225X9020A2-DYS
A3A1C20	0160-0174	9	1	CAPACITOR-FXD .47UF +80-20% 50VDC CER	04222	SR835E474ZAAH
A3A1C23	0180-0197	8	1	CAPACITOR-FXD 2.2UF+-10% 20VDC TA	56289	150D225X9020A2-DYS
A3A1C27	0160-2055	9	1	CAPACITOR-FXD .01UF +80-20% 100VDC CER		805-504 Y5V 103Z
A3A1C28	0160-2055	9	1	CAPACITOR-FXO .01UF +80-20% 100VDC CER		805-504 Y5V 1032
A3A1C29	0160-2055	9	1	CAPACITOR-FXD .01UF +80-20% 100VDC CER		805-504 Y5V 1032
A3A1CR1	1901-0535	9	1	DIODE-SCHOTTKY SM SIG		
A3A1CR2	1901-0535	9	1	DIODE-SCHOTTKY SM SIG		
A3A1CR3	1901-0535	9	1	DIODE-SCHOTTKY SM SIG		
A3A1CR4	1901-0535	9	1	DIODE-SCHOTTKY SM SIG		
A3A1CR5	1901-0040	1	1	DIODE-SWITCHING 30V 50MA 2NS DO-35	71468	
A3A1CR6	1901-0179	7	1	DIODE-SWITCHING 15V 50MA 750PS DO-7	27014	FD777
A3A1L1	9140-0114	4	1	INDUCTOR RF-CH-MLD 10UH +-10% .166D-INX.	99800	1537-36
A3A1L2	9140-0114	4	1	INDUCTOR RF-CH-MLD 10UH +-10% .166D-INX.	99800	1537-36
A3A1L3	9140-0114	4	1	INDUCTOR RF-CH-MLD 10UH +-10% .166D-INX.	99800	1537-36
A3A1MP1	1480-0073	6	1	PIN-ROLL .062-IN-DIA .25-IN-LG BE-CU	72962	99-012-062-0250
A3A1MP2	4040-0749	4	1	EXTR-PC BD BRN POLYC .062-IN-BD-THKNS 1-		
A3A1Q1	1854-0882	B	1	TRANSISTOR NPN PD=300MW FT=200MHZ	56289	
A3A1Q2	1854-0882	8	1	TRANSISTOR NPN PD=300MW FT=200MHZ	56289	
A3A1Q3	1853-0281	9	1	TRANSISTOR PNP 2N2907A SI TO-18 PD=400MW	04713	2N2907A
A3A1Q4	1854-0404	0	1	TRANSISTOR NPN SI TO-18 PD=360MW	04713	
A3A1Q5	1853-0281	9	1	TRANSISTOR PNP 2N2907A SI TO-18 PD=400MW	04713	2N2907A
A3A1Q6	1854-0404	0	1	TRANSISTOR NPN SI TO-18 PD=360MW	04713	
A3A1Q7	1855-0020	8	1	TRANSISTOR J-FET N-CHAN D-MODE TO-18 SI	04713	SFE793
A3A1Q8	1855-0020	8	1	TRANSISTOR J-FET N-CHAN D-MODE TO-18 SI	04713	SFE793
A3A1Q9	1855-0020	8	1	TRANSISTOR J-FET N-CHAN D-MODE TO-18 SI	04713	SFE793
A3A1Q10	1853-0034	0	1	TRANSISTOR PNP SI TO-18 PD=360MW	04713	
A3A1Q11	1854-0404	0	1	TRANSISTOR NPN SI TO-18 PD=360MW	04713	
A3A1Q12	1854-0345	8	1	TRANSISTOR NPN 2N5179 SI TO-72 PD=200MW	04713	2N5179

**Indicates factory-selected value*

HP Part Number 85662-60244
A3A1 Trigger

Reference Designation	HP Part Number	C. D	Qty	Description	Mfr Code	Mfr Part Number
A3A1Q13	1853-0451		1	TRANSISTOR PNP 2N3799 SI TO-18 PD=360MW	0471:	
A3A1Q14	1854-0404		1	TRANSISTOR NPN SI TO-18 PD=360MW	0471:	
A3A1Q15	1854-0039		1	TRANSISTOR NPN 2N3053S SI TO-39 PD=1W	0471:	2N3053S
A3A1R1	0698-6863		1	RESISTOR 1.537K +-0.25% .125W TF TC=D+-5	19701	5033R
A3A1R2	0698-6867		1	RESISTOR 7.351: +-0.25% .125W TF TC=0+-50	19701	5033R
A3A1R3	0698-7794		1	RESISTOR 10K +-0.25% .125W TF TC=0+-100	19701	5033R
A3A1R4	0757-0279		1	RESISTOR 3.16K +-1% .125W TF TC=D+-100	19701	SFR25H
A3A1R5	0757-0279		1	RESISTOR 3.16K +-1% .125W TF TC=0+-100	19701	SFR25H
A3A1R6	0757-0279		1	RESISTOR 3.16K +-1% .125W TF TC=0+-100	19701	SFR25H
A3A1R7	0757-0279		1	RESISTOR 3.16K +-1% .125W TF TC=0+-100	19701	SFR25H
A3A1R8	0757-0279		1	RESISTOR 3.16K +-1% .125W TF TC=0+-100	19701	SFR25H
A3A1R9	0757-0279		1	RESISTOR 3.16K +-1% .125W TF TC=0+-100	19701	SFR25H
A3A1R10	0757-0279		1	RESISTOR 3.16K +-1% .125W TF TC=0+-100	19701	SFR25H
A3A1R11	0698-5573		1	RESISTOR 50K +-0.5% .125W TF TC=0+-100	91637	CMF-55-1, T-1
A3A1R12	0698-8014		1	RESISTOR 22.3K +-0.5% .125W TF TC=0+-50	19701	5033R
A3A1R13	0698-6840		1	RESISTOR 4.07K +-0.5% .125W TF TC=D+-50	19701	5033R
A3A1R14	0698-6217		1	RESISTOR 200K +-0.5% .125W TF TC=0+-100	91637	CMF-55-1, T-1
A3A1R15	0757-0416		1	RESISTOR 511 +-1% .125W TF TC=0+-100	19701	SFR25H
A3A1R16	0757-0280		1	RESISTOR 1K +-1% .125W TF TC=D+-100	19701	SFR25H
A3A1R17	0698-0083		1	RESISTOR 1.96K 1% .125W TF TC=D+-100	19701	SFR25H
A3A1R18	0698-3440		1	RESISTOR 196 1% .125W TF TC=0+-100	19701	SFR25H
A3A1R19	0757-0443		1	RESISTOR 11K +-1% .125W TF TC=0+-100	19701	SFR25H
A3A1R20	0757-1094		1	RESISTOR 1.47K +-1% .125W TF TC=0+-100	19701	SFR25H
A3A1R21	0757-0280		1	RESISTOR 1K +-1% .125W TF TC=D+-100	19701	SFR25H
A3A1R22	0757-0280		1	RESISTOR 1K +-1% .125W TF TC=0+-100	19701	SFR25H
A3A1R23	0757-0280		1	RESISTOR 1K +-1% .125W TF TC=0+-100	19701	SFR25H
A3A1R24	0757-0465		1	RESISTOR 100K +-1% .125W TF TC=0+-100	19701	SFR25H
A3A1R25	0757-0444		1	RESISTOR 12.1K +-1% .125W TF TC=0+-100	19701	SFR25H
A3A1R26	0698-3156		1	RESISTOR 14.7K 1% .125W TF TC=0+-100	19701	SFR25H
A3A1R27	0757-0279		1	RESISTOR 3.16K +-1% .125W TF TC=0+-100	19701	SFR25H
A3A1R28	0698-0083		1	RESISTOR 1.96K 1% .125W TF TC=D+-100	19701	SFR25H
A3A1R29	0757-0280		1	RESISTOR 1K +-1% .125W TF TC=0+-100	19701	SFR25H
A3A1R30	0757-0280		1	RESISTOR 1K +-1% .125W TF TC=0+-100	19701	SFR25H
A3A1R31	0757-0416		1	RESISTOR 511 +-1% .125W TF TC=0+-100	19701	SFR25H
A3A1R32	0698-3156		1	RESISTOR 14.7K 1% .125W TF TC=0+-100	19701	SFR25H
A3A1R33	0698-3440		1	RESISTOR 196 1% .125W TF TC=0+-100	19701	SFR25H
A3A1R34	2100-1972		1	RESISTOR-TRMR 20K 10% WW SIDE-ADJ 20-TRN	32997	3005P-DM3-203
A3A1R35	0698-3156		1	RESISTOR 14.7K 1% .125W TF TC=0+-100	19701	SFR25H
A3A1R36	0698-3441		1	RESISTOR 215 1% .125W TF TC=D+-100	19701	SFR25H
A3A1R37	0698-3445		1	RESISTOR 348 1% .125W TF TC=0+-100	19701	SFR25H
A3A1R40	0757-0279		1	RESISTOR 3.16K +-1% .125W TF TC=0+-100	19701	SFR25H
A3A1R41	0698-3156		1	RESISTOR 14.7K 1% .125W TF TC=0+-100	19701	SFR25H
A3A1R42	0757-0438		1	RESISTOR 5.11K +-1% .125W TF TC=0+-100	19701	SFR25H
A3A1R43	0757-1094		1	RESISTOR 1.47K +-1% .125W TF TC=0+-100	19701	SFR25H
A3A1R45	3757-0280		1	RESISTOR 1K +-1% .125W TF TC=0+-100	19701	SFR25H
A3A1R46	0757-0416		1	RESISTOR 511 +-1% .125W TF TC=0+-100	19701	SFR25H
A3A1R47	0757-0416		1	RESISTOR 511 +-1% .125W TF TC=D+-100	19701	SFR25H
A3A1R48	0757-0442		1	RESISTOR 10K +-1% .125W TF TC=0+-100	19701	SFR25H

**Indicates factory-selected value*

HP Part Number 85662-60244
A3A1 Trigger

Reference Designatior	HP Part Number	C D	Qty	Description	Mfr Code	Mfr Part Number
A3A1R49	0757-0289		1	RESISTOR 13.3K +-1% .125W TF TC=0+-100	19701	SFR25H
A3A1R50	0683-1555		1	RESISTOR 1.5M 5% .25W CF TC=0-900	2M627	R-25J
A3A1R51	0757-0442		1	RESISTOR 10K +-1% .125W TF TC=0+-100	19701	SFR25H
A3A1R52	0698-3260		1	RESISTOR 464K 1% .125W TF TC=0+-100	19701	SFR25H
A3A1R53	0757-0279		1	RESISTOR 3.16K +-1% .125W TF TC=0+-100	19701	SFR25H
A3A1R54	0757-0346		1	RESISTOR 10 +-1% .125W TF TC=0+-100	91637	CMF-55-1, T-l
A3A1R55	0757-0346		1	RESISTOR 10 +-1% .125W TF TC=0+-100	91637	CMF-55-1, T-l
A3A1R56	0757-0346		1	RESISTOR 10 +-1% .125W TF TC=0+-100	91637	CMF-55-1, T-l
A3A1R58	0698-3450		1	RESISTOR 42.2K 1% .125W TF TC=0+-100	19701	SFR25H
A3A1R59	0757-0280		1	RESISTOR 1K +-1% .125W TF TC=0+-100	19701	SFR25H
A3A1R60	0757-0280		1	RESISTOR 1K +-1% .125W TF TC=0+-100	19701	SFR25H
A3A1R61	0757-0280		1	RESISTOR 1K +-1% .125W TF TC=0+-100	19701	SFR25H
A3A1R62	0757-0280		1	RESISTOR 1K +-1% .125W TF TC=D+-100	19701	SFR25H
A3A1R65	0698-0085		1	RESISTOR 2.61K 1% .125W TF TC=0+-100	19701	SFR25H
A3A1R66	0698-3154		1	RESISTOR 4.22K 1% .125W TF TC=0+-100	19701	SFR25H
A3A1R67	0757-0290		1	RESISTOR 6.19K +-1% .125W TF TC=0+-100	19701	SFR25H
A3A1R68	0698-3160		1	RESISTOR 31.6K 1% .125W TF TC=0+-100	19701	SFR25H
A3A1R69	3757-0442		1	RESISTOR 10K +-1% .125W TF TC=0+-100	19701	SFR25H
A3A1R71	3698-3447		1	RESISTOR 422 1% .125W TF TC=0+-100	19701	SFR25H
A3A1R72*	0757-0447		1	RESISTOR 16.2K 1% .125W TF TC=0+-100	19701	SFR25H
A3A1TP1	1251-0600		1	CONNECTOR-SGL CONT PIN 1.14-MM-BSC-SZ SQ	27264	16-06-0034
A3A1TP2	1251-0600		1	CONNECTOR-SGL CONT PIN 1.14-MM-BSC-SZ SQ	27264	16-06-0034
A3A1TP3	1251-0600		1	CONNECTOR-SGL CONT PIN 1.14-MM-BSC-SZ SQ	27264	16-06-0034
A3A1TP4	1251-0600		1	CONNECTOR-SGL CONT PIN 1.14-MM-BSC-SZ SQ	27264	16-06-0034
A3A1TP5	1251-0600		1	CONNECTOR-SGL CONT PIN 1.14-MM-BSC-SZ SQ	27264	16-06-0034
A3A1U1	1820-1423		1	IC MY TTL LS MONOSTBL RETRIG DUAL	01295	SN74LS123N
A3A1U2	1820-1417		1	IC GATE TTL LS NAND QUAD 2-INP	01295	SN74LS26N
A3A1U3	1820-1281		1	IC DCDR TTL LS 2-TO-4-LINE DUAL	01295	SN74LS139AN
A3A1U4	1820-1112		1	IC FF TTL LS D-TYPE POS-EDGE-TRIG PRESET	01295	SN74LS74AN
A3A1U5	1820-1196		1	IC FF TTL LS D-TYPE POS-EDGE-TRIG COM CL	01295	SN74LS174N
A3A1U6	1820-1196		1	IC FF TTL LS D-TYPE POS-EDGE-TRIG COM CL	01295	SN74LS174N
A3A1U7	1820-0471		1	IC INV TTL HEX 1-INP	01295	SN7406N
A3A1U8	1826-0319		1	IC OP AMP LOW-BIAS-H-IMPD TO-99 PKG	27014	LF356H
A3A1U9	1820-1423		1	IC MV TTL LS MDNOSTBL RETRIG DUAL	01295	SN74LS123N
A3A1U10	1820-1212		1	IC FF TTL LS J-K NEG-EDGE-TRIG PRESET/CL	01295	SN74LS112AN
A3A1U11	1820-1201		1	IC GATE TTL LS AND QUAD 2-INP	01295	SN74LS08N
A3A1U12	1820-1112		1	IC FF TTL LS D-TYPE PDS-EDGE-TRIG PRESET	01295	SN74LS74AN
A3A1U13	1820-0475		1	IC COMPARATOR HS TO-99 PKG	27014	LM306H
A3A1U14	1826-0319		1	IC OP AMP LOW-BIAS-H-IMPD TO-99 PKG	27014	LF356H
A3A1U15	1820-1425		1	IC SCHMITT-TRIG TTL LS NAND QUAD 2-INP	01295	SN74LS132N
A3A1U16	1820-1298		1	IC MUXR/DATA-SEL TTL LS 8-TO-1-LINE 8-IN	01295	SN74LS251N
A3A1U17	1820-1197		1	IC GATE TTL LS NAND QUAD 2-INP	01295	SN74LS00N
A3A1U18	1820-1216		1	IC DCDR TTL LS 3-TO-8-LINE 3-INP	01295	SN74LS138N
A3A1VR1	1902-3224		1	DIODE-ZNR 17.8V 5% DO-35 PD=.4W	04713	
A3A1VR2	1902-3224		1	DIODE-ZNR 17.8V 5% DO-35 PD=.4W	04713	
A3A1VR3	1902-3182		1	DIODE-ZNR 12.1V 5% DO-35 PD=.4W	04713	
A3A1VR4	1902-0041		1	DIODE-ZNR 5.11V 5% DO-35 PD=.4W	04713	

**Indicates facto y-selected value*

HP Part Number 85662-60244
A3A1 Trigger

Reference Designatior	HP Part Number	C D	Qty	Description	Mfr Code	Mfr Part Number
A3A1VR5	1902-0041	4	1	DIODE-ZNR 5.11V 5% DO-35 PD=.4W	0471:	

Analyzer Repair Inc.

**Indicates facto y-selected value*

IF-DISPLAY SECTION

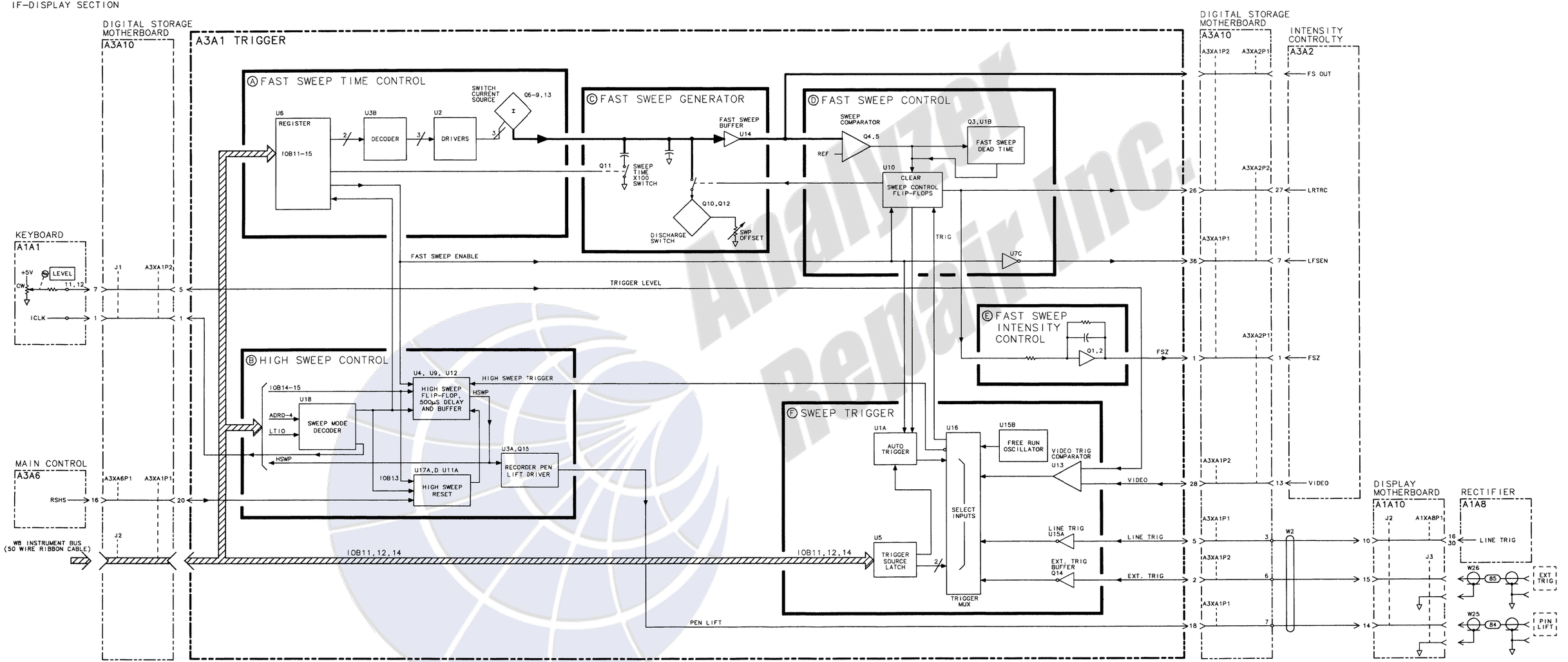

A3A1 TRIGGER, BLOCK DIAGRAM

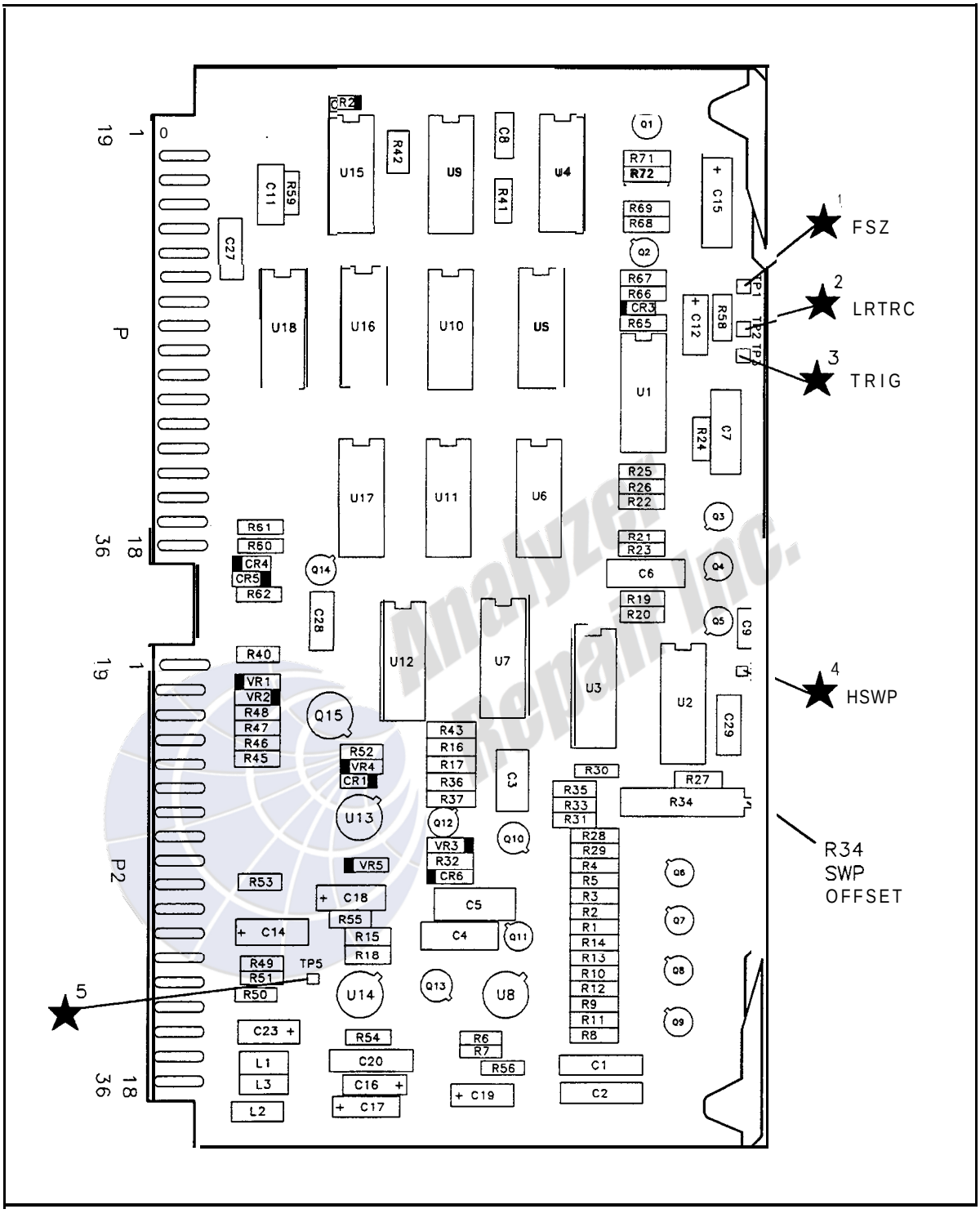

A3A1 Trigger Component Locations, 85662-60014, 85662-60244

A3A1 TRIGGER
85662-60014
(SERIAL PREFIXES: 2403A-3001A)
85662-60244
(SERIAL PREFIX: 3004A)

P1

PIN	SIGNAL	TO/FROM	FUNCTION BLOCK
1	FSZ	A3A2P1-1	E
19	LTIO	A3A10J2-49	B
2	NC		
20	RSHS	A3A8P1-18	B
3	NC		
21	HSMP	A3A10J1-7	B
4	NC		
22	NC		
5	LINE TRIG	A1A8P1-16,34	F
23	NC		
6	NC		
24	NC		
7	NC		
25	NC		
8	NC		
26	ADR4	A3A10J2-27	B
9	ADR3	A3A10J2-26	B
27	ADR2	A3A10J2-25	B
10	ADR1	A3A10J2-24	B
28	ADR0	A3A10J2-23	B
11	IOB15	A3A10J2-18	A B
29	IOB14	A3A10J2-17	A B F
12	IOB13	A3A10J2-16	A B
30	IOB12	A3A10J2-15	A F
13	IOB11	A3A10J2-14	A F
31	NC		
14	NC		
32	NC		
15	NC		
33	NC		
16	NC		C
34	DGND		G
17	NC		G
35	AGND		G
18	PENLIFT	REAR PANEL	B
36	LFSEN	A3A2P2-7	D

P2

PIN	SIGNAL	TO/FROM	FUNCTION BLOCK
1	ICLK	A3A10J1-8	B
19	NC		
2	EXT TRIG	REAR PANEL	F
20	NC		
3	NC		
21	NC		
4	NC		
22	NC		
5	TRIG LEVEL	A3A10J1-14	F
23	NC		
6	NC		
24	NC		
7	NC		
25	NC		
8	NC		
26	LRTRC	A3A2P2-27	D
9	NC		
27	VGND	A3A2P1-11	G
10	NC		
28	VIDEO	A3A2P1-12	F
11	NC		
29	VGND	A3A2P1-13,14	G
12	NC		
30	FS OUT	A3A2P1-15	C
13	NC	NOTE B	
31	NC	NOTE B	
14	NC		
32	NC		
15	NC		
33	NC		
16	DGND		G
34	DGND		G
17	+5V		G
35	AGND		G
18	+15V		G
36	-15V		G

Ⓐ FAST SWEEP TIME CONTROL

Ⓒ FAST SWEEP GENERATOR

Ⓓ FAST SWEEP CONTROL

Ⓔ FAST SWEEP INTENSITY CONTROL

Ⓒ POWER SUPPLIES

Ⓑ HIGH SWEEP CONTROL

Ⓕ SWEEP TRIGGER

NOTES:

1. REFERENCE DESIGNATORS WITHIN THIS ASSEMBLY ARE ABBREVIATED. FOR COMPLETE REFERENCE DESIGNATION, PREFIX ABBREVIATION WITH ASSEMBLY DESIGNATION.
2. UNLESS OTHERWISE INDICATED: RESISTANCE IS IN OHMS (Ω) CAPACITANCE IS IN MICROFARADS (μF) INDUCTANCE IS IN MICROHENRIES (μH)
3. MNEMONIC TABLE:

MNEMONIC	DESCRIPTION
A0-3	INSTRUMENT BUS ADDRESS BITS $\overline{A0}$-$\overline{A3}$ (HIGH=TRUE)
EXT TRIG	EXTERNAL TRIGGER
LFSEN	FAST SWEEP ENABLE
FS OUT	FAST SWEEP OUT
FSZ	FAST SWEEP Z-AXIS (INTENSITY)
HSMP	HIGH SWEEP
IOB11-15	INSTRUMENT BUS DATA BITS 11-15 (HIGH=TRUE)
ICLK	INSTRUMENT CLOCK (FRONT PANEL LEDS)
LINE TRIG	LINE TRIGGER
LTIO	LOW=TOP BOX I/O STROBE
PENLIFT	CHART RECORDER PENLIFT (+15V=LIFT)
LRTRC	FAST SWEEP RETRACE (LOW=RETRACE)
RSHS	RESET HIGH SWEEP
TRIG LEVEL	TRIGGER LEVEL (FROM FRONT PANEL CONTROL)
VIDEO	VIDEO SIGNAL, 0-2V

4. TRIGGER SOURCE ADDRESS:

U18 PIN 10	U18 PIN 11	TRIGGER SOURCE
0	0	FREE RUN
0	1	EXT
1	0	LINE
1	1	VIDEO

5. AUTO TRIGGERING TRUTH TABLE:

U5 PIN 12	FAST SWEEP TRIGGERING
1	AUTO TRIGGER (SHIFT VIDEO, EXT)
0	

6. FAST SWEEP TIME TRUTH TABLE:

FAST SWEEP TIME	U5 PIN 2 $\div$ 100	U5 PIN 1 $\div$ 10	U5 PIN 15 $\div$ 5	U5 PIN 14 $\div$ 2
10nS	0	0	0	0
20	0	0	0	1
50	0	0	1	0
100nS	0	0	1	1
200	0	1	0	0
500	0	1	0	1
1 μS	0	1	1	0
2	0	1	1	1
5	1	0	0	0
10	1	0	0	1
20	1	0	1	0
50	1	0	1	1
100	1	1	0	0
200	1	1	0	1
500	1	1	1	0
1	1	1	1	1

7. UNLESS OTHERWISE INDICATED LOGIC LEVELS ARE TTL: +2.7V TO +5.0V=LOGIC '1', =HIGH 0V TO +0.8V=LOGIC '0', =LOW
8. P2-30,31 USED FOR SIGNAL FEEDTHROUGH ON A3A10 DIGITAL STORAGE MOTHERBOARD.
9. SEE TROUBLESHOOTING HINTS FOR THIS BOARD.
10. FOR SWEEP TIMES $\leq$ 10nS, TP4 IS TTL LOW SIGNAL. TEST WAVEFORM IS OBTAINED BY FIRST PUSHING A15PT1 TO A15TP8 AND THEN PUSHING INSTRUMENT PRESET.
11. UNLESS OTHERWISE INDICATED: SIGNALS ENTER AT LEFT SIDE AND EXIT AT RIGHT SIDE OF FUNCTION BLOCKS.
12. R72= 1Ω A FACTORY-SELECTED COMPONENT. THE VALUE MAY BE CHANGED TO OPTIMIZE PERFORMANCE OF THE A3A1 TRIGGER. THE R72= NOMINAL VALUE AND THE RANGE OF EACH VERSION IS LISTED BELOW.

BOARD VERSION	NOMINAL VALUE	ACCEPTABLE RANGE
85662-60014	28.7KΩ	19.6KΩ-42.2KΩ
85662-60244	16.2KΩ	11.0KΩ-28.7KΩ

A3A1

A3A1 TRIGGER, SCHEMATIC DIAGRAM

A3A2

A3A2 Intensity Control, Circuit Description

A3A2 Intensity Control provides the following functions:

- It receives AX and AY signals from A3A3 Line Generator, approximates the line length, and controls the Z-axis level to the display.
- It sets and controls the duration of the Line Generator drawing period, which is either 4 μs or 19 μs, depending on the approximate line length.
- It provides drive signals to Line Generator switches.
- It controls all display blanking.
- It multiplexes digital storage (Line Generator) X, Y, Z, and blanking with direct display of fast sweep, video, fast sweep Z, and retrace blanking.

Intensity level is modulated as a function of AX and AY. The Line Generator Z-Axis circuit receives AX and AY from A3A3 Line Generator. The magnitudes of AX and AY are summed together to approximate line length. The output of the Line Generator Z-Axis circuit goes to the Bright circuit, which sets the Z-axis signal to maximum when bright lines are drawn. The signal from the Bright circuit is multiplexed with the FSZ signal from A3A1 Trigger and becomes the Z signal to the display. The Z signal also goes to the AUX Z circuit, where Z and AUX BLANK are combined to form the AUX Z signal.

The line length approximation form the Line Generator Z-Axis circuit goes to the Long Line Comparator, which decides whether the line should be drawn as a long line (19 μs drawing time) or a short line (4 μs drawing time). This decision is stored at the Input Register and sent to the A3A3 Line Generator as the LLL signal. It goes with LGCLK to the Long Line/Short Line Timing circuit, which generates the timing signals necessary to control the Line Generator setup and drawing periods. The signal INTR is used by A3A6 Main Control to determine when to send new X and Y values to the Line Generator. The timing signals also go to the Integrator Switch Driver and to the Sample and Hold Driver, which form the drive signals needed for the Line Generator.

Control of display blanking begins at the Input Register. Blank and blink information is held in the register during the line drawing period. The Blanking Logic circuit controls all display blanking. It unblanks, blanks, or blinks lines as required by the Input Register. It multiplexes digital storage blanking with fast-sweep retrace blanking.

Fast Scan Trigger Detect and Bus Buffer circuits are used to provide information to A3A6 Main Control to create the digital storage display.

Line Generator Z-Axis Ⓙ

AX and AY are received from A3A3 Line Generator. U17 and associated circuitry is a magnitude detector. For positive AX, CR1 is forward biased, U17 output goes negative, and CR2 cathode is at 0 V. For negative AX, CR1 is reverse biased, U17 output goes positive, and CR2 cathode is -AX volts ($or|\Delta X|$). Since R15=2R7=R1, the signal at CR5 anode due to AX alone is $-|\Delta X|$. When added to the output of the AY magnitude detector, the signal at CR5 anode is $(-|\Delta X|-|\Delta Y|)$, which is a rough approximation of line length. The signal at CR7 anode is equal to the signal at CR5 anode except when CR5 anode is more positive than -0.1 V. R16 and R17 prevent CR7 anode from rising above -0.1 V.

The line length signal$(-|\Delta X|-|\Delta Y|)$ is sampled by U5 during the setup period of A3A3 Line Generator. Switches Q2 and Q4 are closed during sampling. The signal is held on C3 during the drawing period. Switches Q1 and Q3 are closed during the hold mode.

For dim lines, the DIM signal is high, and switch A of analog switch U1A is closed to lower the gain of the Sample and Hold circuit.

U1A switch D is closed during long lines (19 μs drawing period).

Bright Ⓚ

For bright lines (BRIGHT signal high), switch C of U1B is closed to set the signal LGZ to +2 V.

Digital Storage/Fast Scan Mux Ⓜ

This circuit provides multiplexing between the digital storage display (Line Generator) and the fast scan display (video and fast sweep). For the digital storage display, LGX, LGY, and LGZ are connected to X, Y, and Z by U15 and U14. For the fast scan display, FS OUT (fast sweep output), VIDEO, and FSZ (fast sweep Z axis) are selected.

Long Line Comparator Ⓛ

The Long Line Comparator receives the line length approximation from CR7 cathode and compares it with the long-line threshold (LL THRESHOLD adjustment R12). U4 pin 7 goes high when the approximation has greater magnitude than the threshold.

Input Register Ⓒ

The signal from the Long Line Comparator and line intensity information are stored in the Input Register when a positive edge occurs on the INTR line. The Input Register is updated for each line drawn on the display. Signal FS is used to select the fast scan display (fast sweep and video).

Analyzer Repair Inc.

Blink Ⓓ

The output of U12 is a 1 Hz signal with a 90 percent duty cycle. When enabled by the BLINK command stored in the Input Register, this signal causes display blinking.

Long Line/Short Line Timing Ⓑ

This circuit receives signal LGCLK from A3A7 Interface and signal LL from the Input Register. It generates signal INTR, which is a string of 1 μs pulses. When LL is low the pulses are spaced 5 μs apart; when LL is high the pulses are 20 μs apart. This provides the timing signals for the 4 and 19 μs Line Generator drawing periods and 1 μs setup period.

Integrator Switch Driver Ⓔ

This circuit provides the drive signals for the Integrator switches in A3A3 Line Generator. Q13 and Q14 form a complementary driver. When the input is low, Q13 is on and Q14 is off, setting INTG to -5 V and LINTG to 4.7 V nominal. When the input is high, Q13 is off and 14 is on, setting INTG to +7.3 V nominal and LINTG to -5 V.

Sample and Hold Switch Driver Ⓒ

This circuit provides the drive signals for the Sample and Hold circuits of the Line Generator X, Y, and Z axes. Q10 and Q12 form a complementary driver. A -9.6 V reference is provided by Q11 and associated circuitry. Q9 is a level translator. When U11 pin 11 goes low, Q9 collector goes to -10.3 V, turning Q10 off and Q12 on. Signals HLDX and HLDY go to 0 V, and signal SMPL goes to -7.6 V nominal. When U11 pin 11 goes high, Q9 collector goes to -8.9 V, turning Q10 on and Q12 off. SMPL goes to 0 V and Q10 collector goes to -8.4 V nominal. Potentiometers R50 (X S&H BAL) and R51 (Y S&H BAL) are used to adjust the HLDX and HLDY drive levels to A3A3 Line Generator. Cl8 and Q5 speed the rise time of the HLDX and HLDY signals. As U11 pin 11 goes from high to low, the base of Q5 goes low, causing Q5 to turn on and the HLDX and HLDY signals to rise almost instantaneously.

Blanking Logic Ⓕ

This circuit provides all display blanking. It muliplexes the retrace blanking of the fast scan display (direct video and fast sweep) with the digital storage blanking. For the digital storage display it provides blanking or unblanking as specified by signals LLGBLANK, BLINK, DOTEN, and INTR. R30, R27, C16, R28, R32, and Cl5 are delay circuits which match the delay of the LBLANK signal to the delay of the Line Generator. R31, R29, and Cl4 match the retrace blanking delay to the fast sweep delay.

AUX Z Ⓝ

The AUX Z circuit receives the LBLANK signal from the Blanking Logic and the Z signal from the Digital Storage/Fast Scan MUX. It generates the AUX BLANK and AUX Z signals. R65 and R62 convert the 0 to 2 V range of Z to the 0 to 1 V range necessary for variation of AUX Z intensity. U8 is a voltage follower with Q6 providing a high current output.

Blanking causes the AUX Z signal to drop to -1 V or less. When AUX BLANK goes high, Q7 turns off and Q8 turns on, causing AUX Z to go negative. When AUX BLANK IS LOW, Q7 is on and Q8 is off.

Fast Scan Trigger Detect Ⓗ

This circuit is used to detect the occurrence of a fast scan trigger. When LRTRC, the retrace signal, goes high, a fast scan has been triggered. Flip-flop U18B is set by the positive edge of LRTRC. U18B is reset by LRSTO.

Bus Buffer Ⓘ

This circuit buffers status signals onto the Digital Storage Bus.

A3A2 Intensity Control, Troubleshooting

The A3A2 Intensity Control Assembly modulates the Z-Axis intensity, controls the A3A3 Line Generator drawing period, controls the display blanking, and multiplexes Digital Storage with the fast sweep video for sweep times less than 20 ms.

Digital Storage Test program 4 is used to troubleshoot this assembly. Table l-l lists the voltages that are present at various nodes in the Line Generator Z-Axis Ⓙ. Depending on the persistence of the oscilloscope, the waveforms will appear either as dots or vertical line segments. If any of the sample and hold FETs A3A2 Q1 to Q4 are defective, it is easier to replace all four than to isolate the defective component.

Table l-l. Line Generator Z-Axis Voltages

A3A2R12	Pl-36	U17 Pin 6	Pl-34	U16 Pin 6	U9 Pin 6	U5 Pin 6
LL (CW)	$2 V to -6 V	-0.5 V to +6 V	$2 V to -9 V	-0.5 V to +9 V	0 to $9 V	0 to +6 V
SL (CCW)	+5 V to -6 V	-0.5 V to +6	V +2 V to -9 V	-0.5 V to +9 V	0 to +9 V	0 to +14 V

Disabling the blanking signal can be helpful when troubleshooting labels that are shifted from their proper positions. This is done by grounding one input to U7D. This can be accomplished without removing the board by running a jumper from ground to A3A2R32, the resistor nearest to the LG/FS CAL connector, A3A2J2.

The following program draws either a horizontal or a vertical line on the CRT. It is useful for troubleshooting problems associated with dynamic operation of the Z-Axis Line Generator. A better understanding of the operation of the Z-Axis Line Generator will be gained by keying in this program and observing the waveforms while reading the circuit description.

Key in the following:

Instrument Preset	Comments
[BLANK] TRACE A	
[BLANK] TRACE B	
[SHIFT] Recorder Upper Right	WRITE:
1056Hz	(Skip Page)
[SHIFT] Recorder Lower Left	DSPL ADRS
0 Hz	
[SHIFT] Recorder Upper Right	WRITE:
1026Hz	Vector Command
0 Hz	.. X, Y PAIR 1
0 Hz	X,Y PAIR 1
1023Hz	..X,YPAIR 2
0 Hz	..X,YPAIR 2
0 Hz	..X,YPAIR 3
0 Hz	..X,YPAIR 3
1056 Hz	(Skip Page)
[SHIFT] Recorder Lower Left	DSPL ADRS
2048 Hz	
[SHIFT] Recorder Upper Right	WRITE:
1056Hz	(Skip Page)

To switch to a vertical line, key in:

[SHIFT] Recorder Lower Left
3 Hz
[SHIFT] Recorder Upper Right
0 Hz
1023 Hz

The waveforms in Figure l-l show the voltages for the AX and X components. For a vertical line, the waveforms are identical at the corresponding nodes in the AY and Y channels.

Analyzer Repair Inc.

Oscilloscope settings:
Vertical: 5V/div
Sweep Time: 10us/div
Analyzer Settings:
A3A2R12: Fully CCW

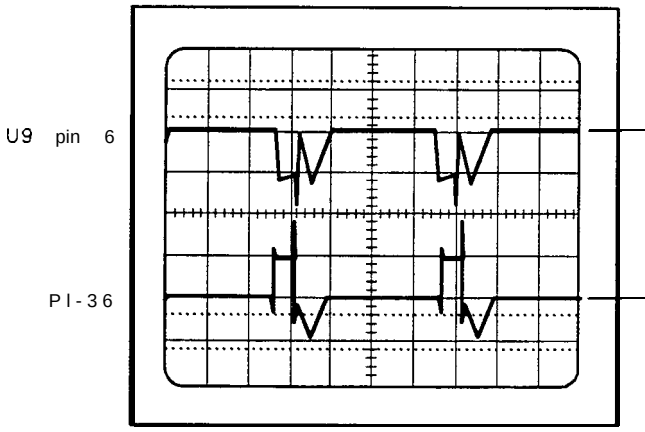

a. Magnitude Detector Output

Oscilloscope settings:
Vertical: 5V/div
Sweep Time: 10us/div
Analyzer Settings:
A3A2R12: Fully CCW

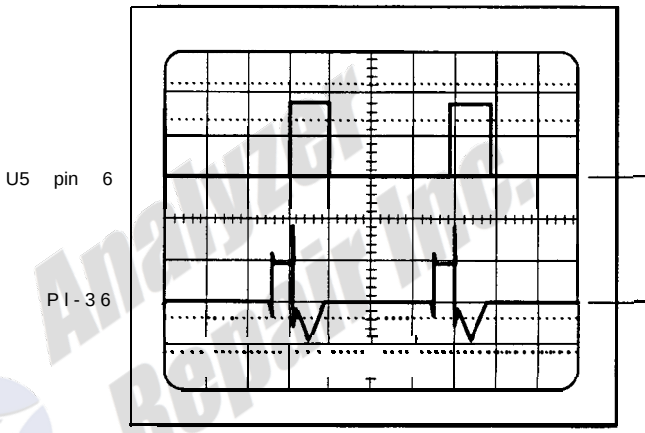

b. Sample and Hold Output

Oscilloscope settings:
Vertical: 1V/div
Sweep Time: 10us/div
Ext trigger: A3A2P2-23
Analyzer Settings:
A3A2R12: Fully CCW

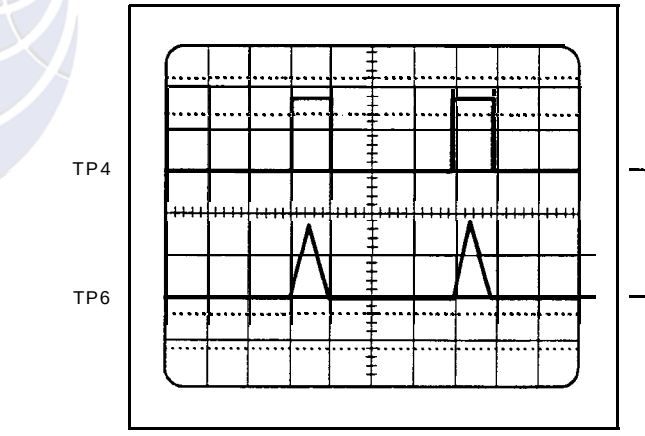

c. Z and X Outputs

Figure 1. intensity Control Waveforms

Analyzer Repair Inc.

HP Part Number 85662-60025

A3A2 Intensity Control

Reference Designatior	HP Part Number	C. D	Qty	Description	Mfr Code	Mfr Part Number
A3A2	85662-60025		1	BOARD ASSEMBLY, INTENSITY CONTROL (SERIAL PREFIXES: 2403A-3001A)	2848(	85662-60025
A3A2C1	0160-2249		1	CAPACITOR-FXD 4.7PF +-.25PF SOOVDC CER	5276:	2RDPLX0504R7NP0
A3A2C2	0160-2264	2	1	CAPACITOR-FXD 2opF +-5% 500VDC CER 0+-30	52763	2RDPLX0502ORNP0
A3A2C3	0160-3067	!	1	CAPACITOR-FXD 200PF +-5% 300VDC MICA 0+7	09023	CD15FD201J03
A3A2C4	0160-2202	8	1	CAPACITOR-FXD 75PF +-5% 300VDC MICA -20/	09023	CD15ED750J03
A3A2C5	0160-4084	8	1	CAP-FXD 0.1uF 50 V	56289	1C20X7R104M050B
A3A2C6	0180-0228	6	1	CAPACITOR-FXD 22UF+-10% 15VDC TA	56289	150D226X9015B2-DYS
A3A2C7	0180-0374	3	1	CAPACITOR-FXD 10UF+-10% EOVDC TA	56289	150D106X9020B2-DYS
A3A2C8	0180-0374	3	1	CAPACITOR-FXD 10UF+-10% EOVDC TA	56289	1500106X902082-DYS
A3A2C9	0180-0374	3	1	CAPACITOR-FXD 10UF+-10% 20VDC TA	56289	150D106X9020B2-DYS
A3A2C10	0160-2055	C	1	CAPACITOR-FXD .01UF +80-20% 100VDC CER		805-504 Y5V 1032
A3A2C11	0160-2055	9	1	CAPACITOR-FXD .01UF +80-20% 100VDC CER		805-504 Y5V 1032
A3A2C13	0160-4084	8	1	CAP-FXD 0.1uF 50 V	56289	1C20X7R104M050B
A3A2C14	0160-2257	3	1	CAPACITOR-FXD 10PF +-5% SOOVDC CER 0+-60	52763	2RDPLX0501RNP0
A3A2C15	0160-2264	2	1	CAPACITOR-FXD 20PF +-5% 500VDC CER 0+-30	52763	2RDPLX0502ORNP0
A3A2C16	0140-0192	C	1	CAPACITOR-FXD 68PF +-5% SOOVDC MICA -20/	09023	CD15ED680J03
A3A2C17	0160-4084	8	1	CAP-FXD 0.1uF 50 V	56289	1C20X7R104M050B
A3A2C18	0160-2204	C	1	CAPACITOR-FXD 100PF +-5% SOOVDC MICA 0+7	09023	CD15FD101J03
A3A2C19	0160-4084	8	1	CAP-FXD 0.1uF 50 V	56289	1C20X7R104M050B
A3A2C20	0160-4084	a	1	CAP-FXD 0.1uF 50 V	56289	1C20X7R104M050B
A3A2C21	0160-4084	a	1	CAP-FXD 0.1uF 50 V	56289	1C20X7R104M050B
A3A2C22	0160-4084	8	1	CAP-FXD 0.1uF 50 V	56289	1C20X7R104M050B
A3A2C23	0160-4084	8	1	CAP-FXD 0.1uF 50 V	56289	1C20X7R104M050B
A3A2C24	0160-4084	8	1	CAP-FXD 0.1uF 50 V	56289	1C20X7R104M050B
A3A2C25	0160-4084	8	1	CAP-FXD 0.1uF 50 V	56289	1C20X7R104M050B
A3A2C26	0160-4084	8	1	CAP-FXD 0.1uF 50 V	56289	1C20X7R104M050B
A3A2C27	0160-4084	a	1	CAP-FXD 0.1uF 50 V	56289	1C20X7R104M050B
A3A2C28	3160-4084	a	1	CAP-FXD 0.1uF 50 V	56289	1C20X7R104M050B
A3A2C29	3160-4084	8	1	CAP-FXD 0.1uF 50 V	56289	1C20X7R104M050B
A3A2C30	0140-0205	5	1	CAPACITOR-FXD 62PF +-5% 300VDC MICA -20/	09023	CD15ED620J03
A3A2C31	3160-4084	8	1	CAP-FXD 0.1uF 50 V	56289	1C20X7R104M050B
A3A2C32	0160-4084	8	1	CAP-FXD 0.1uF 50 V	56289	1C20X7R104M050B
A3A2C33	1160-4084	8	1	CAP-FXD 0.1uF 50 V	56289	1C20X7R104M050B
A3A2C34	1160-2055	9	1	CAPACITOR-FXD .01UF +80-20% 100VDC CER		805-504 Y5V 1032
A3A2CR1	1901-0040	1	1	DIODE-SWITCHING 30V 50MA 2NS DO-35	71468	
A3A2CR2	1901-0040	1	1	DIODE-SWITCHING 30V 50MA 2NS DO-35	71468	
A3A2CR3	1901-0040	1	1	DIODE-SWITCHING 30V 50MA 2NS DO-35	71468	
A3A2CR4	1901-0040	1	1	DIODE-SWITCHING 30V 50MA 2NS DO-35	71468	
A3A2CR5	1901-0518	8	1	DIODE-SCHOTTKY SM SIG		5082-2800
A3A2CR6	1901-0518	8	1	DIODE-SCHOTTKY SM SIG		5082-2800
A3A2CR7	1901-0518	8	1	DIODE-SCHOTTKY SM SIG		5082-2800
A3A2CR8	1901-0040	1	1	DIODE-SWITCHING 30V 50MA 2NS DO-35	71468	
A3A2CR9	1901-0040	1	1	DIODE-SWITCHING 30V 50MA 2NS DO-35	71468	
A3A2CR10	1901-0040	1	1	DIODE-SWITCHING 30V 50MA 2NS DO-35	71468	
A3A2CR11	1901-0040	1	1	DIODE-SWITCHING 30V 50MA 2NS DO-35	71468	
A3A2CR12	1901-0040	1	1	DIODE-SWITCHING 30V 50MA 2NS DO-35	71468	

**Indicates factory-selected value*

HP Part Number 85662-60025

A3A2 Intensity Control

Reference Designation	HP Part Number	C D	Qty	Description	Mfr Code	Mfr Part Number
A3A2CR13	1901-0040		1	DIODE-SWITCHING 30V 50MA 2NS DO-35	71461	
A3A2CR14	1901-0040		1	DIODE-SWITCHING 30V 50MA 2NS DO-35	7146	
A3A2CR15	1901-0518		1	DIODE-SCHOTTKY SM SIG		5082-2800
A3A2CR16	1901-0518		1	DIODE-SCHOTTKY SM SIG		5082-2800
A3A2CR17	1901-0040		1	DIODE-SWITCHING 30V 50MA 2NS DO-35	7146	
A3A2J1	1250-0543		1	CONNECTOR-RF SM-SNP M PC 50-OHM	98291	51-053-0349-BE8
A3A2J2	1250-0543		1	CONNECTOR-RF SM-SNP M PC 50-OHM	98291	51-053-0349-BE8
A3A2L1	9140-0210		1	INDUCTOR RF-CH-ML0 100UH +-5% .166D-INX.	9980	1537-76
A3A2L2	8558-80011		1	FILTER COIL BLUE	2848	08558-80011
A3A2L3	9140-0237		1	INDUCTOR RF-CH-ML0 200UH +-5% .166D-INX.	99801	1537-90
A3A2L5	9140-0210		1	INDUCTOR RF-CH-ML0 100UH +-5% .166D-INX.	9980	1537-76
A3A2MP2	1480-0073		1	PIN-ROLL .062-IN-DIA .25-IN-LG BE-CU	72962	99-012-062-0250
A3A2MP3	4040-0750		1	EXTR-PC BO RED POLYC .062-IN-BD-THKNS 1-		
A3A2MP4				NOT ASSIGNED		
A3A2Q1	1855-0081		1	TRANSISTOR J-FET N-CHAN 0-MODE SI	34677	
A3A2Q2	1855-0081		1	TRANSISTOR J-FET N-CHAN 0-MODE SI	3467;	
A3A2Q3	1855-0081		1	TRANSISTOR J-FET N-CHAN 0-MODE SI	3467;	
A3A2Q4	1855-0081		1	TRANSISTOR J-FET N-CHAN 0-MODE SI	3467;	
A3A2Q5	1853-0007		1	TRANSISTOR PNP 2N3251 SI TO-18 PD=360MW	0471:	2N3251
A3A2Q6	1854-0404		1	TRANSISTOR NPN SI TO-18 PD=360MW	0471:	
A3A2Q7	1853-0034		1	TRANSISTOR PNP SI TO-18 PD=360MW	0471:	
A3A2Q8	1853-0007		1	TRANSISTOR PNP 2N3251 SI TO-18 PD=360MW	04713	2N3251
A3A2Q9	1853-0007		1	TRANSISTOR PNP 2N3251 SI TO-18 PD=360MW	04713	2N3251
A3A2Q10	1854-0404		1	TRANSISTOR NPN SI TO-18 PD=360MW	04713	
A3A2Q11	1853-0007		1	TRANSISTOR PNP 2N3251 SI TO-18 PD=360MW	04713	213251
A3A2Q12	1854-0404		1	TRANSISTOR NPN SI TO-18 PD=360MW	04713	
A3A2Q13	1853-0007		1	TRANSISTOR PNP 213251 SI TO-18 PD=360MW	04713	2N3251
A3A2Q14	1853-0007		1	TRANSISTOR PNP 2N3251 SI TO-18 PD=360MW	04713	213251
A3A2R1	0757-0449		1	RESISTOR 20K +-1% .125W TF TC=0+-100	19701	SFR25H
A3A2R2	0757-0449		1	RESISTOR 20K +-1% .125W TF TC=0+-100	19701	SFR25H
A3A2R3	0757-0449		1	RESISTOR 20K +-1% .125W TF TC=0+-100	19701	SFR25H
A3A2R4	0757-0449		1	RESISTOR 20K +-1% .125W TF TC=0+-100	19701	SFR25H
A3A2R5	0757-0449		1	RESISTOR 20K +-1% .125W TF TC=0+-100	19701	SFR25H
A3A2R6	0757-0449		1	RESISTOR 20K +-1% .125W TF TC=0+-100	19701	SFR25H
A3A2R7	0757-0442		1	RESISTOR 10K +-1% .125W TF TC=0+-100	19701	SFR25H
A3A2R8	0698-3153		1	RESISTOR 3.831: 1% .125W TF TC=0+-100	19701	SFR25H
A3A2R9	0698-3156		1	RESISTOR 14.7K 1% .125W TF TC=0+-100	19701	SFR25H
A3A2R10	0757-0442		1	RESISTOR 10K +-1% .125W TF TC=0+-100	19701	SFR25H
A3A2R11	0757-0442		1	RESISTOR 10K +-1% .125W TF TC=0+-100	19701	SFR25H
A3A2R12	2100-3354		1	RESISTOR-TRMR 50K 10% TKF SIDE-AOJ 1-TRN	32997	3386X-146-503
A3A2R13	0757-0442		1	RESISTOR 10K +-1% .125W TF TC=0+-100	19701	SFR25H
A3A2R14	0757-0442		1	RESISTOR 10K +-1% .125W TF TC=0+-100	19701	SFR25H
A3A2R15	0757-0449		1	RESISTOR 20K +-1% .125W TF TC=0+-100	19701	SFR25H
A3A2R16	0757-0438		1	RESISTOR 5.11K +-1% .125W TF TC=0+-100	19701	SFR25H
A3A2R17*	0757-0470		1	RESISTOR 162K +-1% .125W TF TC=0+-100	19701	SFR25H
A3A2R18	0757-0438		1	RESISTOR 5.11K +-1% .125W TF TC=0+-100	19701	SFR25H
A3A2R19	0757-0280		1	RESISTOR 1K +-1% .125W TF TC=0+-100	19701	SFR25H
A3A2R20	0757-0442		1	RESISTOR 10K +-1% .125W TF TC=0+-100	19701	SFR25H

**Indicates factory-elected value*

HP Part Number 85662-60025

A3A2 Intensity Control

Reference Designation	HP Part Number	C D	Qty	Description	Mfr Code	Mfr Part Number
A3A2R21*	0757-0447	4	1	RESISTOR 16.2K +-1% .125W TF TC=0+-100	19701	SFR25H
A3A2R22	0757-0443	0	1	RESISTOR 11K +-1% .125W TF TC=0+-100	19701	SFR25H
A3A2R23	0757-0421	4	1	RESISTOR 825 +-1% .125W TF TC=0+-100	19701	SFR25H
A3A2R24	0698-3157	3	1	RESISTOR 19.6K 1% .125W TF TC=0+-100	19701	SFR25H
A3A2R25	0757-0280	3	1	RESISTOR 1K +-1% .125W TF TC=0+-100	19701	SFR25H
A3A2R26	0757-0442	9	1	RESISTOR 10K +-1% .125W TF TC=0+-100	19701	SFR25H
A3A2R27	0757-0422	5	1	RESISTOR 909 +-1% .125W TF TC=0+-100	19701	SFR25H
A3A2R28	0757-0317	7	1	RESISTOR 1.33K +-1% .125W TF TC=0+-100	19701	SFR25H
A3A2R29	0757-0422	5	1	RESISTOR 909 +-1% .125W TF TC=0+-100	19701	SFR25H
A3A2R30	0757-0317	7	1	RESISTOR 1.33K +-1% .125W TF TC=0+-100	19701	SFR25H
A3A2R31	0757-0317	7	1	RESISTOR 1.33K +-1% .125W TF TC=0+-100	19701	SFR25H
A3A2R32	0757-0422	5	1	RESISTOR 909 +-1% .125W TF TC=0+-100	19701	SFR25H
A3A2R33	0757-0280	3	1	RESISTOR 1K +-1% .125W TF TC=0+-100	19701	SFR25H
A3A2R34	0698-0084	9	1	RESISTOR 2.15K 1% .125W TF TC=0+-100	19701	SFR25H
A3A2R35	0757-1094	9	1	RESISTOR 1.47K +-1% .125W TF TC=0+-100	19701	SFR25H
A3A2R36	0698-3435	0	1	RESISTOR 38.3 1% .125W TF TC=0+-100	19701	SFR25H
A3A2R37	0698-3151	7	1	RESISTOR 2.87K 1% .125W TF TC=0+-100	19701	SFR25H
A3A2R38	0757-0398	4	1	RESISTOR 75 +-1% .125W TF TC=0+-100	19701	SFR25H
A3A2R39	0757-0401	0	1	RESISTOR 100 +-1% .125W TF TC=0+-100	19701	SFR25H
A3A2R40	0698-3446	3	1	RESISTOR 383 1% .125W TF TC=0+-100	19701	SFR25H
A3A2R41	0757-0438	3	1	RESISTOR 5.11K +-1% .125W TF TC=0+-100	19701	SFR25H
A3A2R42	0757-0394	0	1	RESISTOR 51.1 +-1% .125W TF TC=0+-100	19701	SFR25H
A3A2R43	0757-0401	0	1	RESISTOR 100 +-1% .125W TF TC=0+-100	19701	SFR25H
A3A2R44	0757-0460	1	1	RESISTOR 61.9K +-1% .125W TF TC=0+-100	19701	SFR25H
A3A2R45	0757-0288	1	1	RESISTOR 9.09K +-1% .125W TF TC=0+-100	19701	SFR25H
A3A2R46	0757-0419	0	1	RESISTOR 681 +-1% .125W TF TC=0+-100	19701	SFR25H
A3A2R47	0757-0278	9	1	RESISTOR 1.78K +-1% .125W TF TC=0+-100	19701	SFR25H
A3A2R48	0698-3155	1	1	RESISTOR 4.641: 1% .125W TF TC=0+-100	19701	SFR25H
A3A2R49	0757-0394	0	1	RESISTOR 51.1 +-1% .125W TF TC=0+-100	19701	SFR25H
A3A2R50	2100-3351	6	1	RESISTOR-TRMR 500 10% TKF SIDE-AOJ 1-TRN	32997	3386X-146-501
A3A2R51	2100-3351	6	1	RESISTOR-TRMR 500 10% TKF SIDE-AOJ 1-TRN	32997	3386X-Y46-501
A3A2R52	0698-3443	0	1	RESISTOR 287 1% .125W TF TC=0+-100	19701	SFR25H
A3A2R53	0757-0438	3	1	RESISTOR 5.11K +-1% .125W TF TC=0+-100	19701	SFR25H
A3A2R54	0698-0082	7	1	RESISTOR 464 1% .125W TF TC=0+-100	19701	SFR25H
A3A2R55	0757-0438	3	1	RESISTOR 5.11K +-1% .125W TF TC=0+-100	19701	SFR25H
A3A2R56	0698-3150	6	1	RESISTOR 2.37K 1% .125W TF TC=0+-100	19701	SFR25H
A3A2R57	0757-0428	1	1	RESISTOR 1.62K +-1% .125W TF TC=0+-100	19701	SFR25H
A3A2R58	0757-0416	7	1	RESISTOR 511 +-1% .125W TF TC=0+-100	19701	SFR25H
A3A2R59	0698-3442	9	1	RESISTOR 237 1% .125W TF TC=0+-100	19701	SFR25H
A3A2R60	0698-3446	3	1	RESISTOR 383 1% .125W TF TC=0+-100	19701	SFR25H
A3A2R61	0757-0419	0	1	RESISTOR 681 +-1% .125W TF TC=0+-100	19701	SFR25H
A3A2R62	0698-3157	3	1	RESISTOR 19.6K 1% .125W TF TC=0+-100	19701	SFR25H
A3A2R63	0698-3153	9	1	RESISTOR 3.83K 1% .125W TF TC=0+-100	19701	SFR25H
A3A2R64	0757-0442	9	1	RESISTOR 10K +-1% .125W TF TC=0+-100	19701	SFR25H
A3A2R65	0698-3157	3	1	RESISTOR 19.6K 1% .125W TF TC=0+-100	19701	SFR25H
A3A2R66	0757-0405	4	1	RESISTOR 162 +-1% .125W TF TC=0+-100	19701	SFR25H
A3A2TP1	0360-0535	0	1	TERMINAL-TEST POINT .330IN ABOVE	46819	

**Indicates factory-selected value*

HP Part Number 85662-60025

A3A2 Intensity Control

Reference Designatior	HP Part Number	C D	Qty	Description	Mfr Code	Mfr Part Number
A3A2TP2	1360-0535	(	1	TERMINAL-TEST POINT .330IN ABOVE	4G81S	
A3A2TP3	1360-0535	(	1	TERMINAL-TEST POINT .330IN ABOVE	4G81S	
A3A2TP4	1360-0535	(	1	TERMINAL-TEST POINT .330IN ABOVE	4G81S	
A3A2TP5	1360-0535	(	1	TERMINAL-TEST POINT .330IN ABOVE	4G81S	
A3A2TP6	1360-0535	(	1	TERMINAL-TEST POINT .330IN ABOVE	4G81S	
A3A2TP7	1360-0535	I	1	TERMINAL-TEST POINT .330IN ABOVE	4G81S	
A3A2TP8	1360-0535	I	1	TERMINAL-TEST POINT .330IN ABOVE	4G81S	
A3A2TP9	1360-0535	(	1	TERMINAL-TEST POINT .330IN ABOVE	4G81S	
A3A2TP10	360-0535	(	1	TERMINAL-TEST POINT .330IN ABOVE	4G81S	
A3A2TP11	360-0535	(	1	TERMINAL-TEST POINT .330IN ABOVE	4G81S	
A3A2TP12	360-0535	(	1	TERMINAL-TEST POINT .330IN ABOVE	4G81S	
A3A2TP13	360-0535	(	1	TERMINAL-TEST POINT .330IN ABOVE	4G81S	
A3A2U1	820-1548	4	1	ANALOG SWITCH 4 SPST 14 -CEROIP	04713	MC14066BCL
A3A2U2	820-1196	8	1	IC FF TTL LS O-TYPE POS-EDGE-TRIG COM Cl	01295	SN74LS174N
A3A2U3	820-1197	S	1	IC GATE TTL LS NAND QUAD P-INP	01295	SN74LS00N
A3A2U4	826-0026	-	1	IC COMPARATOR PRCN TO-99 PKG	27014	LM311H
A3A2U5	826-0081	C	1	IC OP AMP WB TO-99 PKG	27014	LM318H
A3A2U6	820-1415	4	1	IC SCHMITT-TRIG TTL LS NAND DUAL 4-INP	01295	SN74LS13N
A3A2U7	820-1425	6	1	IC SCHMITT-TRIG TTL LS NAND QUAD 2-INP	01295	SN74LS132N
A3A2U8	826-0081	C	1	IC OP AMP WB TO-99 PKG	27014	LM318H
A3A2U9	826-0081	C	1	IC OP AMP WB TO-99 PKG	27014	LM318H
A3A2U10	820-1199	1	1	IC INV TTL LS HEX 1-INP	01295	SN74LS04N
A3A2U11	820-0054	5	1	IC GATE TTL NAND QUAD P-INP	01295	SN7400N
A3A2U12	826-0180	2	1	IC TIMER TTL MONO/ASTBL	18324	NE555N
A3A2U13	820-1432	5	1	IC CNTR TTL LS BIN SYNCHRO POS-EDGE-TRIE	01295	SN74LS163AN
A3A2U14	326-0417	6	1	ANALOG SWITCH 4 SPST 16 -CBRZ/SOR	27014	LF13333D
A3A2U15	326-0417	6	1	ANALOG SWITCH 4 SPST 16 -CBRZ/SOR	27014	LF13333D
A3A2U16	326-0081	0	1	IC OP AMP WB TO-99 PKG	27014	LM318H
A3A2U17	326-0081	0	1	IC OP AMP WB TO-99 PKG	27014	LM318H
A3A2U18	320-1112	8	1	IC FF TTL LS O-TYPE POS-EDGE-TRIG PRESET	01295	SN74LS74AN
A3A2U19	320-1491	6	1	IC BFR TTL LS NON-INV HEX 1-INP	01295	SN74LS367AN
A3A2VR1	902-0554	4	1	DIODE-ZNR 10V 5% PD=1W IR=10UA	04713	
A3A2VR2	902-0025	4	1	DIODE-ZNR 10V 5% DO-35 PD=.4W TC=+.06%	04713	
A3A2VR3	902-3092	1	1	DIODE-ZNR 4.99V 2% DO-35 PD=.4W	04713	
A3A2VR4	102-3139	7	1	DIODE-ZNR 8.25V 5% DO-35 PD=.4W	04713	

Indicates factory-selected value

HP Part Number 85662-60245

A3A2 Intensity Control

Reference Designation	HP Part Number	C D	Qty	Description	Mfr Code	Mfr Part Number
A3A2	85662-60245	5	1	BOARD ASSEMBLY, INTENSITY CONTROL (SERIAL PREFIX: 3004A)	28480	85662-60245
A3A2C1	0160-2249	3	1	CAPACITOR-FXO 4.7PF +-.25PF 500VDC CER	52763	2RDPLX0504R7NP0
A3A2C2	0160-2264	2	1	CAPACITOR-FXO 20PF +-5% 500VOC CER 0+-30	52763	2RDPLX05020RNP0
A3A2C3	0160-3067	5	1	CAPACITOR-FXO 200PF +-5% 300VOC MICA 0+7	09023	CD15FD201J03
A3A2C4	0160-2202	8	1	CAPACITOR-FXO 75PF +-5% 300VOC MICA -20/	09023	CD15ED750J03
A3A2C5	0160-4084	8	1	CAP-FXO 0.1uF 50 V	56289	1C20X7R104M050B
A3A2C6	0180-0228	6	1	CAPACITOR-FXO 22UF+-10% 15VOC TA	56289	150D226X9015B2-DYS
A3A2C7	0180-0374	3	1	CAPACITOR-FXO 10UF+-10% 20VOC TA	56289	150D106X9020B2-DYS
A3A2C8	0180-0374	3	1	CAPACITOR-FXO 10UF+-10% 20VDC TA	56289	150D106X9020B2-DYS
A3A2C9	0180-0374	3	1	CAPACITOR-FXO 10UF+-10% 20VOC TA	56289	1500106X902082-OYS
A3A2C10	0160-2055	9	1	CAPACITOR-FXO .01UF +80-20% 100VDC CER		805-504 Y5V 1032
A3A2C11	0160-2055	9	1	CAPACITOR-FXO .01UF +80-20% 100VDC CER		805-504 Y5V 103Z
A3A2C13	0160-4084	8	1	CAP-FXO 0.1uF 50 V	56289	1C20X7R104M050B
A3A2C14	0160-2257	3	1	CAPACITOR-FXO 10PF +-5% 500VDC CER 0+-60	52763	2RDPLX0501RNP0
A3A2C15	0160-2264	2	1	CAPACITOR-FXO 20PF +-5% 500VOC CER 0+-30	52763	2RDPLX05020RNP0
A3A2C16	0140-0192	9	1	CAPACITOR-FXO 68PF +-5% 300VOC MICA -20/	09023	CD15ED680J03
A3A2C17	0160-4084	8	1	CAP-FXO 0.1uF 50 V	56289	1C20X7R104M050B
A3A2C18	0160-2204	0	1	CAPACITOR-FXO 100PF +-5% 300VOC MICA 0+7	09023	CD15FD101J03
A3A2C19	0160-4084	8	1	CAP-FXO 0.1uF 50 V	56289	1C20X7R104M050B
A3A2C20	0160-4084	8	1	CAP-FXO 0.1uF 50 V	56289	1C20X7R104M050B
A3A2C21	0160-4084	8	1	CAP-FXO 0.1uF 50 V	56289	1C20X7R104M050B
A3A2C22	0160-4084	8	1	CAP-FXO 0.1uF 50 V	56289	1C20X7R104M050B
A3A2C23	0160-4084	8	1	CAP-FXO 0.1uF 50 V	56289	1C20X7R104M050B
A3A2C24	0160-4084	8	1	CAP-FXO 0.1uF 50 V	56289	1C20X7R104M050B
A3A2C25	0160-4084	8	1	CAP-FXO 0.1uF 50 V	56289	1C20X7R104M050B
A3A2C26	0160-4084	8	1	CAP-FXO 0.1uF 50 V	56289	1C20X7R104M050B
A3A2C27	0160-4084	8	1	CAP-FXO 0.1uF 50 V	56289	1C20X7R104M050B
A3A2C28	0160-4084	8	1	CAP-FXO 0.1uF 50 V	56289	1C20X7R104M050B
A3A2C29	0160-4084	8	1	CAP-FXO 0.1uF 50 V	56289	1C20X7R104M050B
A3A2C30	0140-0205	5	1	CAPACITOR-FXO 62PF +-5% 300VOC MICA -20/	09023	CD15ED620J03
A3A2C31	0160-4084	8	1	CAP-FXO 0.1uF 50 V	56289	1C20X7R104M050B
A3A2C32	0160-4084	8	1	CAP-FXO 0.1uF 50 V	56289	1C20X7R104M050B
A3A2C33	0160-4084	8	1	CAP-FXO 0.1uF 50 V	56289	1C20X7R104M050B
A3A2C34	0160-2055	9	1	CAPACITOR-FXO .01UF +80-20% 100VDC CER		805-504 Y5V 1032
A3A2CR1	1901-0040	1	1	DIODE-SWITCHING 30V 50MA 2NS DO-35	71468	
A3A2CR2	1901-0040	1	1	DIODE-SWITCHING 30V 50MA 2NS DO-35	71468	
A3A2CR3	1901-0040	1	1	DIODE-SWITCHING 30V 50MA 2NS DO-35	71468	
A3A2CR4	1901-0040	1	1	DIODE-SWITCHING 30V 50MA 2NS DO-35	71468	
A3A2CR5	1901-0518	8	1	DIODE-SCHOTTKY SM SIG		5082-2800
A3A2CR6	1901-0518	8	1	DIODE-SCHOTTKY SM SIG		5082-2800
A3A2CR7	1901-0518	8	1	DIODE-SCHOTTKY SM SIG		5082-2800
A3A2CR8	1901-0040	1	1	DIODE-SWITCHING 30V 50MA 2NS DO-35	71468	
A3A2CR9	1901-0040	1	1	DIODE-SWITCHING 30V 50MA 2NS DO-35	71468	
A3A2CR10	1901-0040	1	1	DIODE-SWITCHING 30V 50MA 2NS DO-35	71468	
A3A2CR11	1901-0040	1	1	DIODE-SWITCHING 30V 50MA 2NS DO-35	71468	
A3A2CR12	1901-0040	1	1	DIODE-SWITCHING 30V 50MA 2NS DO-35	71468	

**Indicates factory-selected value*

HP Part Number 85662-60245

A3A2 Intensity Control

Reference Designatior	HP Part Number	C. D	Qty	Description	Mfr Code	Mfr Part Number
A3A2CR13	1901-0040		1	DIODE-SWITCHING 30V 50MA 2NS DO-35	7146E	
A3A2CR14	1901-0040	.	1	DIODE-SWITCHING 30V 50MA 2NS DO-35	7146E	
A3A2CR15	1901-0518	E	1	DIODE-SCHOTTKY SM SIG		5082-2800
A3A2CR16	1901-0518	E	1	DIODE-SCHOTTKY SM SIG		5082-2800
A3A2CR17	1901-0040		1	DIODE-SWITCHING 30V 50MA 2NS DO-35	7146E	
A3A2J1	1250-0543	E	1	CONNECTOR-RF SM-SNP M PC 50-OHM	98291	51-053-0349-BE8
A3A2J2	1250-0543	E	1	CONNECTOR-RF SM-SNP M PC 50-OHM	98291	51-053-0349-BE8
A3A2L1	9140-0210	I	1	INDUCTOR RF-CH-ML0 100UH +-5% .166D-INX.	9980C	1537-76
A3A2L2	08558-80011	E	1	FILTER COIL BLUE	28480	08558-80011
A3A2L3	9140-0237	2	1	INDUCTOR RF-CH-ML0 200UH +-5% .166D-INX.	99800	1537-90
A3A2L5	9140-0210	I	1	INDUCTOR RF-CH-ML0 100UH +-5% .166D-INX.	99800	1537-76
A3A2MP2	1480-0073	E	1	PIN-ROLL .062-IN-DIA .25-IN-LG BE-CU	72962	99-012-062-0250
A3A2MP3	4040-0750	7	1	EXTR-PC BO RED POLYC .062-IN-BD-THKNS 1-		
A3A2MP4				NOT ASSIGNED		
A3A2Q1	1855-0081	1	1	TRANSISTOR J-FET N-CHAN O-MODE SI	34677	
A3A2Q2	1855-0081	1	1	TRANSISTOR J-FET N-CHAN O-MODE SI	34677	
A3A2Q3	1855-0081	1	1	TRANSISTOR J-FET N-CHAN O-MODE SI	34677	
A3A2Q4	1855-0081	1	1	TRANSISTOR J-FET N-CHAN O-MODE SI	34677	
A3A2Q5	1853-0007	7	1	TRANSISTOR PNP 2N3251 SI TO-18 PD=360MW	04713	2N3251
A3A2Q6	1854-0404	a	1	TRANSISTOR NPN SI TO-18 PD=360MW	04713	
A3A2Q7	1853-0034	0	1	TRANSISTOR PNP SI TO-18 PD=360MW	04713	
A3A2Q8	1853-0007	7	1	TRANSISTOR PNP 2N3251 SI TO-18 PD=360MW	04713	2N3251
A3A2Q9	1853-0007	7	1	TRANSISTOR PNP 2N3251 SI TO-18 PD=360MW	04713	2N3251
A3A2Q10	1854-0404	0	1	TRANSISTOR NPN SI TO-18 PD=360MW	04713	
A3A2Q11	1853-0007	7	1	TRANSISTOR PNP 2N3251 SI TO-18 PD=360MW	04713	2N3251
A3A2Q12	1854-0404	0	1	TRANSISTOR NPN SI TO-18 PD=360MW	04713	
A3A2Q13	1853-0007	7	1	TRANSISTOR PNP 2N3251 SI TO-18 PD=360MW	04713	2N3251
A3A2Q14	1853-0007	7	1	TRANSISTOR PNP 2N3251 SI TO-18 PD=360MW	04713	2N3251
A3A2R1	1757-0449	6	1	RESISTOR 20K +-1% .125W TF TC=0+-100	19701	SFR25H
A3A2R2	1757-0449	6	1	RESISTOR 20K +-1% .125W TF TC=0+-100	19701	SFR25H
A3A2R3	1757-0449	6	1	RESISTOR 20K +-1% .125W TF TC=0+-100	19701	SFR25H
A3A2R4	1757-0449	6	1	RESISTOR 20K +-1% .125W TF TC=0+-100	19701	SFR25H
A3A2R5	1757-0449	6	1	RESISTOR 20K +-1% .125W TF TC=0+-100	19701	SFR25H
A3A2R6	1757-0449	6	1	RESISTOR 20K +-1% .125W TF TC=0+-100	19701	SFR25H
A3A2R7	1757-0442	3	1	RESISTOR 10K +-1% .125W TF TC=0+-100	19701	SFR25H
A3A2R8	3698-3153	9	1	RESISTOR 3.83K 1% .125W TF TC=0+-100	19701	SFR25H
A3A2R9	3698-3156	2	1	RESISTOR 14.7K 1% .125W TF TC=0+-100	19701	SFR25H
A3A2R10	1757-0442	9	1	RESISTOR 10K +-1% .125W TF TC=0+-100	19701	SFR25H
A3A2R11	1757-0442	9	1	RESISTOR 10K +-1% .125W TF TC=0+-100	19701	SFR25H
A3A2R12	2100-3354	9	1	RESISTOR-TRMR 50K 10% TKF SIDE-AOJ 1-TRN	32997	3386X-Y46-503
A3A2R13	1757-0442	9	1	RESISTOR 10K +-1% .125W TF TC=0+-100	19701	SFR25H
A3A2R14	1757-0442	9	1	RESISTOR 10K +-1% .125W TF TC=0+-100	19701	SFR25H
A3A2R15	1757-0449	6	1	RESISTOR 20K +-1% .125W TF TC=0+-100	19701	SFR25H
A3A2R16	1757-0438	3	1	RESISTOR 5.11K +-1% .125W TF TC=0+-100	19701	SFR25H
A3A2R17*	1757-0470	3	1	RESISTOR 162K +-1% .125W TF TC=0+-100	19701	SFR25H
A3A2R18	1757-0438	3	1	RESISTOR 5.11K +-1% .125W TF TC=0+-100	19701	SFR25H
A3A2R19	1757-0280	3	1	RESISTOR 1K +-1% .125W TF TC=0+-100	19701	SFR25H
A3A2R20	1698-0085	0	1	RESISTOR 2.61K +-1% .125W TF TC=0+-100	19701	SFR25H

**Indicates factory-selected value*

HP Part Number 85662-60245

A3A2 Intensity Control

Reference Designation	HP Part Number	C. D	Qty	Description	Mfr Code	Mfr Part Number
A3A2R21*	0698-3158	4	1	RESISTOR 23.7K +-1% .125W TF TC=0+-100	19701	SFR25H
A3A2R22	0757-0443	(	1	RESISTOR 11K +-1% .125W TF TC=0+-100	19701	SFR25H
A3A2R23	0757-0421	4	1	RESISTOR 825 +-1% .125W TF TC=0+-100	19701	SFR25H
A3A2R24	0698-3157	.	1	RESISTOR 19.6K 1% .125W TF TC=0+-100	19701	SFR25H
A3A2R25	0757-0279	(	1	RESISTOR 3.16K +-1% .125W TF TC=0+-100	19701	SFR25H
A3A2R26	0757-0442	9	1	RESISTOR 10K +-1% .125W TF TC=0+-100	19701	SFR25H
A3A2R27	0757-0422	E	1	RESISTOR 909 +-1% .125W TF TC=0+-100	19701	SFR25H
A3A2R28	0757-0317	7	1	RESISTOR 1.33K +-1% .125W TF TC=0+-100	19701	SFR25H
A3A2R29	0757-0422	E	1	RESISTOR 909 +-1% .125W TF TC=0+-100	19701	SFR25H
A3A2R30	0757-0317	7	1	RESISTOR 1.33K +-1% .125W TF TC=0+-100	19701	SFR25H
A3A2R31	0757-0317	i	1	RESISTOR 1.33K +-1% .125W TF TC=0+-100	19701	SFR25H
A3A2R32	0757-0422	E	1	RESISTOR 909 +-1% .125W TF TC=0+-100	19701	SFR25H
A3A2R33	0757-0280	3	1	RESISTOR 1K +-1% .125W TF TC=0+-100	19701	SFR25H
A3A2R34	0698-0084	9	1	RESISTOR 2.15K 1% .125W TF TC=0+-100	19701	SFR25H
A3A2R35	0757-1094	9	1	RESISTOR 1.47K +-1% .125W TF TC=0+-100	19701	SFR25H
A3A2R36	0698-3435	C	1	RESISTOR 38.3 1% .125W TF TC=0+-100	19701	SFR25H
A3A2R37	0698-3151	7	1	RESISTOR 2.871: 1% .125W TF TC=0+-100	19701	SFR25H
A3A2R38	0757-0398	4	1	RESISTOR 75 +-1% .125W TF TC=0+-100	19701	SFR25H
A3A2R39	0757-0401	C	1	RESISTOR 100 +-1% .125W TF TC=0+-100	19701	SFR25H
A3A2R40	0698-3446	3	1	RESISTOR 383 1% .125W TF TC=0+-100	19701	SFR25H
A3A2R41	0757-0438	3	1	RESISTOR 5.11K +-1% .125W TF TC=0+-100	19701	SFR25H
A3A2R42	0757-0394	a	1	RESISTOR 51.1 +-1% .125W TF TC=0+-100	19701	SFR25H
A3A2R43	0757-0401	a	1	RESISTOR 100 +-1% .125W TF TC=0+-100	19701	SFR25H
A3A2R44	3757-0460	1	1	RESISTOR 61.9K +-1% .125W TF TC=0+-100	19701	SFR25H
A3A2R45	0757-0288	1	1	RESISTOR 9.09K +-1% .125W TF TC=0+-100	19701	SFR25H
A3A2R46	3757-0419	a	1	RESISTOR 681 +-1% .125W TF TC=0+-100	19701	SFR25H
A3A2R47	3757-0278	9	1	RESISTOR 1.78K +-1% .125W TF TC=0+-100	19701	SFR25H
A3A2R48	1698-3155	1	1	RESISTOR 4.64K 1% .125W TF TC=0+-100	19701	SFR25H
A3A2R49	0757-0394	a	1	RESISTOR 51.1 +-1% .125W TF TC=0+-100	19701	SFR25H
A3A2R50	2100-3351	6	1	RESISTOR-TRMR 500 10% TKF SIDE-AOJ 1-TRN	32997	3386X-Y46-501
A3A2R51	2100-3351	6	1	RESISTOR-TRMR 500 10% TKF SIDE-AOJ 1-TRN	32997	3386X-Y46-501
A3A2R52	0698-3443	0	1	RESISTOR 287 1% .125W TF TC=0+-100	19701	SFR25H
A3A2R53	1757-0438	3	1	RESISTOR 5.11K +-1% .125W TF TC=0+-100	19701	SFR25H
A3A2R54	0698-0082	7	1	RESISTOR 464 1% .125W TF TC=0+-100	19701	SFR25H
A3A2R55	0757-0438	3	1	RESISTOR 5.11K +-1% .125W TF TC=0+-100	19701	SFR25H
A3A2R56	0698-3150	6	1	RESISTOR 2.371: 1% .125W TF TC=0+-100	19701	SFR25H
A3A2R57	1757-0428	1	1	RESISTOR 1.62K +-1% .125W TF TC=0+-100	19701	SFR25H
A3A2R58	0757-0416	7	1	RESISTOR 511 +-1% .125W TF TC=0+-100	19701	SFR25H
A3A2R59	0698-3442	9	1	RESISTOR 237 1% .125W TF TC=0+-100	19701	SFR25H
A3A2R60	0698-3446	3	1	RESISTOR 383 1% .125W TF TC=0+-100	19701	SFR25H
A3A2R61	0757-0419	0	1	RESISTOR 681 +-1% .125W TF TC=0+-100	19701	SFR25H
A3A2R62	0698-3157	3	1	RESISTOR 19.6K 1% .125W TF TC=0+-100	19701	SFR25H
A3A2R63	0698-3153	9	1	RESISTOR 3.831: 1% .125W TF TC=0+-100	19701	SFR25H
A3A2R64	0757-0442	9	1	RESISTOR 10K +-1% .125W TF TC=0+-100	19701	SFR25H
A3A2R65	0698-3157	3	1	RESISTOR 19.6K 1% .125W TF TC=0+-100	19701	SFR25H
A3A2R66	0757-0405	4	1	RESISTOR 162 +-1% .125W TF TC=0+-100	19701	SFR25H
A3A2TP1	0360-0535	0	1	TERMINAL-TEST POINT .330IN ABOVE	46819	

**Indicates factory-selected value*

HP Part Number 85662-60245

A3A2 Intensity Control

Reference Designation	HP Part Number	C. D	Qty	Description	Mfr Code	Mfr Part Number
A3A2TP2	3360-0535	(	1	TERMINAL-TEST POINT .330IN ABOVE	4G81S	
A3A2TP3	)360-0535	(	1	TERMINAL-TEST POINT .330IN ABOVE	4G81S	
A3A2TP4	3360-0535	(	1	TERMINAL-TEST POINT .330IN ABOVE	4G81S	
A3A2TP5	3360-0535	(	1	TERMINAL-TEST POINT .330IN ABOVE	4G81S	
A3A2TP6	3360-0535	(	1	TERMINAL-TEST POINT .330IN ABOVE	4G81S	
A3A2TP7	1360-0535	(	1	TERMINAL-TEST POINT .330IN ABOVE	4G81S	
A3A2TP8	1360-0535	(	1	TERMINAL-TEST POINT .330IN ABOVE	4G81S	
A3A2TP9	)360-0535	(	1	TERMINAL-TEST POINT .330IN ABOVE	46819	
A3A2TP10	)360-0535	(	1	TERMINAL-TEST POINT .330IN ABOVE	46819	
A3A2TP11	)360-0535	(	1	TERMINAL-TEST POINT .330IN ABOVE	46819	
A3A2TP12	)360-0535	(	1	TERMINAL-TEST POINT .330IN ABOVE	46819	
A3A2TP13	1360-0535	(	1	TERMINAL-TEST POINT .330IN ABOVE	46819	
A3A2U1	1820-1548	4	1	ANALOG SWITCH 4 SPST 14 -CEROIP	04713	MC14066BCL
A3A2U2	1820-1196	8	1	IC FF TTL LS O-TYPE POS-EDGE-TRIG COM CL	01295	SN74LS174N
A3A2U3	.820-1197	9	1	IC GATE TTL LS NAND QUAD 2-INP	01295	SN74LS00N
A3A2U4	.826-0026		1	IC COMPARATOR PRCN TO-99 PKG	27014	LM311H
A3A2U5	.826-0081	C	1	IC OP AMP WB TO-99 PKG	27014	LM318H
A3A2U6	.820-1415	4	1	IC SCHMITT-TRIG TTL LS NAND DUAL 4-INP	01295	SN74LS13N
A3A2U7	.820-1425	6	1	IC SCHMITT-TRIG TTL LS NAND QUAD 2-INP	01295	SN74LS132N
A3A2U8	.826-0081	C	1	IC OP AMP WB TO-99 PKG	27014	LM318H
A3A2U9	826-0081	C	1	IC OP AMP WB TO-99 PKG	27014	LM318H
A3A2U10	820-1199	1	1	IC INV TTL LS HEX 1-INP	01295	SN74LS04N
A3A2U11	820-0054	5	1	IC GATE TTL NAND QUAD 2-INP	01295	SN7400N
A3A2U12	826-0180	a	1	IC TIMER TTL MONO/ASTBL	18324	NE555N
A3A2U13	820-1432	5	1	IC CNTR TTL LS BIN SYNCHRO POS-EDGE-TRIG	01295	SN74LS163AN
A3A2U14	826-0417	6	1	ANALOG SWITCH 4 SPST 16 -CBRZ/SOR	27014	LF13333D
A3A2U15	826-0417	6	1	4NALOG SWITCH 4 SPST 16 -CBRZ/SOR	27014	LF13333D
A3A2U16	826-0081	a	1	IC OP AMP WB TO-99 PKG	27014	LM318H
A3A2U17	826-0081	0	1	IC OP AMP WB TO-99 PKG	27014	LM318H
A3A2U18	820-1112	8	1	IC FF TTL LS O-TYPE POS-EDGE-TRIG PRESET	01295	SN74LS74AN
A3A2U19	820-1491	6	1	IC BFR TTL LS NON-INV HEX 1-INP	01295	SN74LS367AN
A3A2VR1	902-0554	4	1	DIODE-ZNR 10V 5% PO=1W IR=10UA	04713	
A3A2VR2	902-0025	4	1	DIODE-ZNR 10V 5% DO-35 PD=.4W TC=+.06%	04713	
A3A2VR3	902-3092	1	1	DIODE-ZNR 4.99V 2% DO-35 PD=.4W	04713	
A3A2VR4	902-3139	7	1	DIODE-ZNR 8.25V 5% DO-35 PD=.4W	04713	

**Indicates factory-selected value*

IF-DISPLAY SECTION

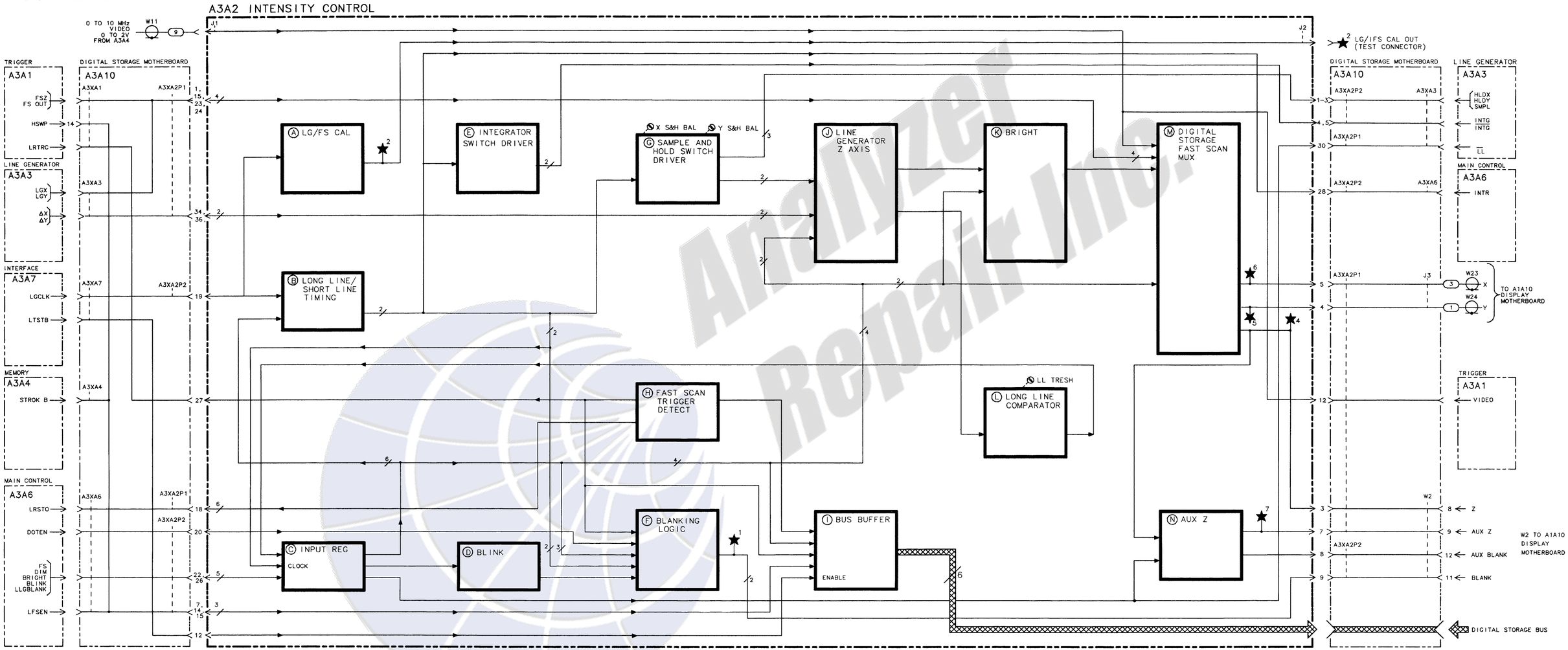

A3A2 INTENSITY CONTROL, BLOCK DIAGRAM

Analyzer Repair Inc.

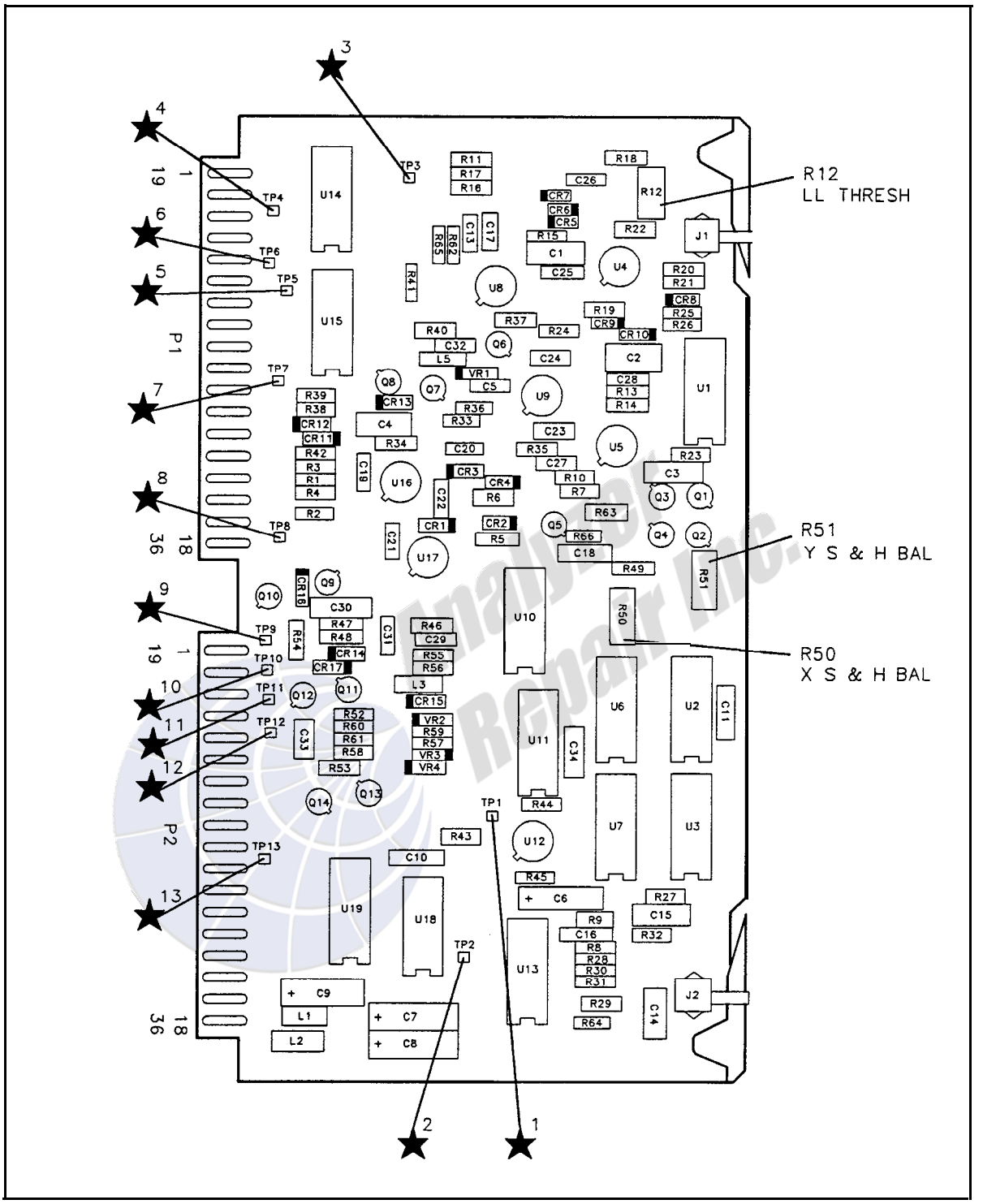

A3A2 Intensity Control Component Locations, 85662-60025, 85662-60245

A3A2 INTENSITY CONTROL (SHEET 1 OF 2)
85662-60025
(SERIAL PREFIXES: 2403A-3001A)
85662-60245
(SERIAL PREFIX: 3004A)

P1

PIN	SIGNAL	TO/FROM	FUNCTION BLOCK	
1	FSZ	A3A1P1-1	M	
19	GND		O	
2	GND		O	
20	GND		O	
3	Z	NOTE 11	M	
21	GND		O	
4	Y	A1A5P1-1,16	M	
22	GND		O	
5	X	A1A5P1-1,16	M	
23	LGX	A3A3P1-5	M	
6	GND		O	
24	LGY	A3A3P1-6	M	
7	AUX Z	REAR PANEL	N	
25	GND		O	
8	NC		M	
26	GND		O	
9	NC			
27	GND		O	
10	GND		O	
28	GND		O	
11	VGND	A3A1P2-27	O	
29	GND		O	
12	VIDEO	A3A1P2-28	M	
30	LLL	A3A3P1-30	C	
13	VGND	A3A1P2-27	O	
31	GND		O	
14	VGND	A3A1P2-27	O	
32	GND		O	
15	FS OUT	A3A1P2-30	M	
33	GND		O	
16	GND		O	
34	ΔY	A3A3P1-16	J	
17	GND		O	
35	GND		O	
18	LRSTO	A3A6P1-18	H	
36	ΔX	A3A3P1-16	J	

P2

PIN	SIGNAL	TO/FROM	FUNCTION BLOCK	
1	HLDY	A3A3P1-32	G	
19	LGCLK	A3A7P2-8	B	
2	HLDX	A3A3P1-33	G	
20	DOTEN	A3A6P1-24	F	
3	SMPL	A3A3P1-34	G	
21	NC			
4	LINTG	A3A3P1-35	E	
22	BRIGHT	A3A6AP1-1	C	
5	INTG	A3A3P1-36	E	
23	FS	A3A6P1-19	C	
6	NC			
24	LLGBLANK	A3A6P1-2	C	
7	LFSEN	A3A1P2-31	I	
25	BLINK	A3A6P1-20	C	
8	AUX BLANK	REAR PANEL	M	
26	DIM	A3A6P1-3	C	
9	LBLANK	A1A2P1-21	F	
27	LRTRC	A3A1P2-26	F	
10	NC			
28	INTR	A3A6P2-24	B	
11	B2		I	
29	NC			
12	LTSTB	A3A7P2-4	I	
30	B5		I	
13	B6	A3A7P2-13	I	
31	B7		I	
14	HSMP	A3A1P1-21	I	
32	B9		I	
15	STROK8	A3A4P1-3	I	
33	B11		I	
16	DGND		O	
34	DGND		O	
17	+5V	A3A1OW3	O	
35	AGND		O	
18	+15V	A3A1OW3	O	
36	-15V	A3A1OW3	O	

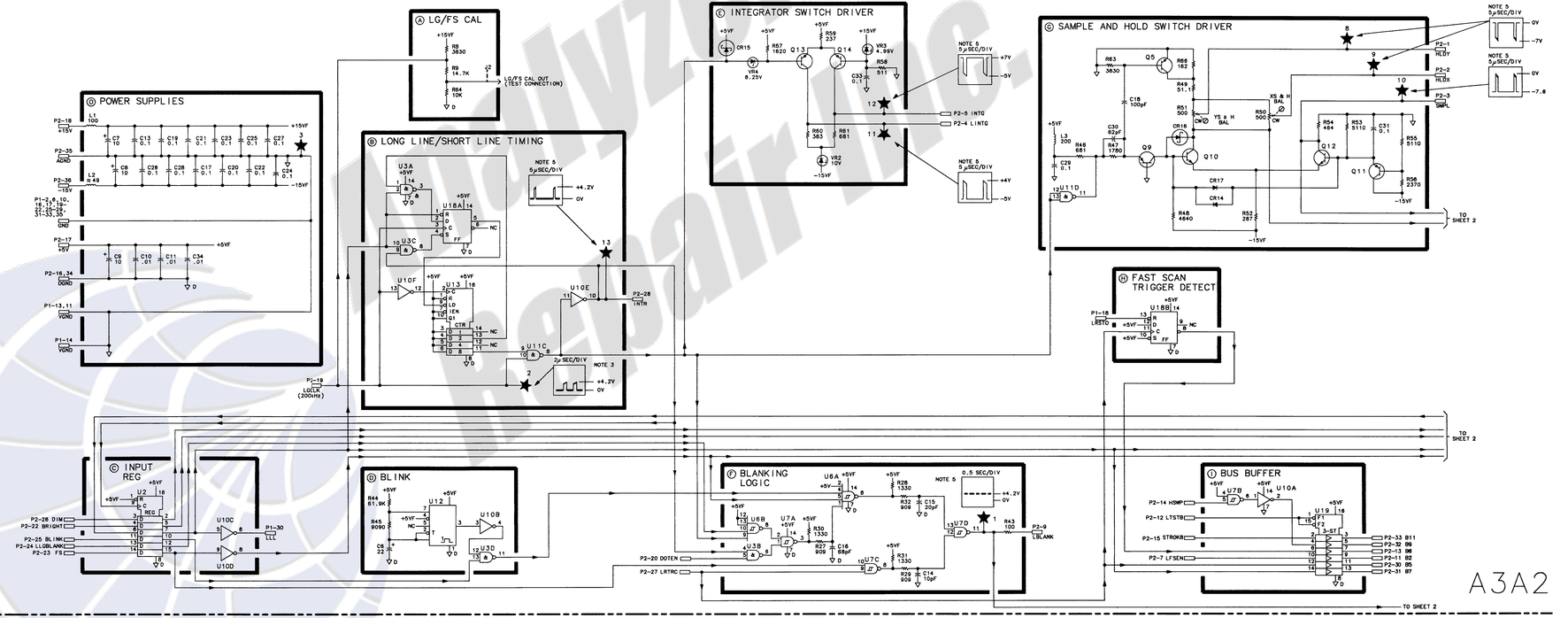

A3A2 INTENSITY CONTROL, SCHEMATIC DIAGRAM (1 OF 2)

A3A2 INTENSITY CONTROL (SHEET 2 OF 2)
85662-60025
(SERIAL PREFIXES: 2403A-3001A)
85662-60245
(SERIAL PREFIX: 3004A)

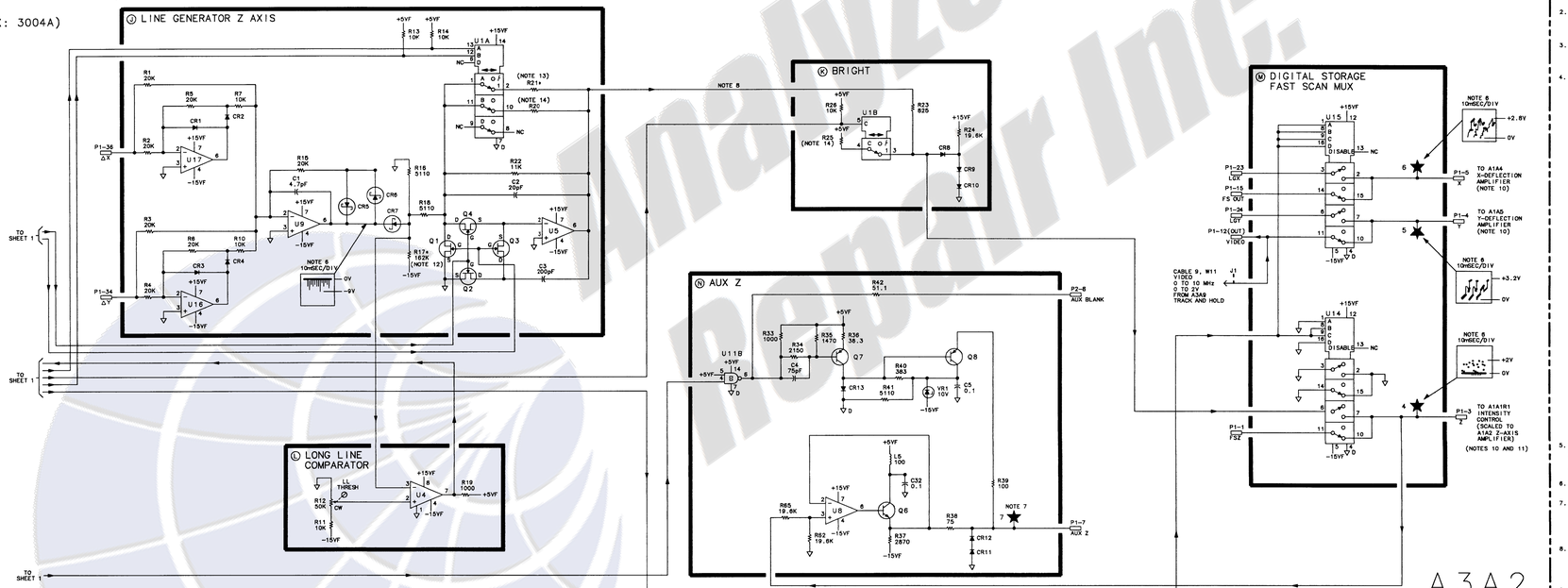

NOTES:

1. REFERENCE DESIGNATORS WITHIN THIS ASSEMBLY ARE ABBREVIATED. FOR COMPLETE REFERENCE DESIGNATION, PREFIX ABBREVIATION WITH ASSEMBLY DESIGNATION.
2. UNLESS OTHERWISE INDICATED: RESISTANCE IS IN OHMS (Ω) CAPACITANCE IS IN MICROFARADS(μF) INDUCTANCE IS IN MICROHENRIES(μH)
3. UNLESS OTHERWISE INDICATED: LOGIC LEVELS ARE TTL: +2.0V TO +5.0V=LOGIC '1' HIGH 0V TO +0.8V=LOGIC '0' LOW
4. MNEMONIC TABLE:

MNEMONIC	DESCRIPTION
FSX	FAST SWEEP X
LGX	LINE GENERATOR X
LGY	LINE GENERTOR Y
LLL	LOW=LONG LINE
HLDY	HOLD Y
LGCLK	LINE GENERATOR CLOCK
HLDX	HOLD X
DOTEN	DOT ENABLE
SMPL	SAMPLE
LINTG	NOT INTEGRATE
INTG	INTEGRATE
FS	FAST SCAN
LLGBLANK	LOW=LINE GENERATOR BLANK
LFSEN	LOW=FAST SCAN ENABLE
INTR	INTERRUPT
HSMP	HIGH=SMPCP
LRSTO	LOW=RESET TRIGGER OCCURED
STROKB	EIGHT CHARACTER STROKE
BRIGHT	BRIGHT LINE
DIM	DIM LINE
LL	LONG LINE
LRTRC	LOW=RETRACE
BLINK	BLINK LINE
ΔX	DELTA X
ΔY	DELTA Y
LBLANK	LOW=BLANK
LTSTB	LOW=TEST B
XS & H BAL	X SAMPLE AND HOLD BALANCE
YS & H BAL	Y SAMPLE AND HOLD BALANCE
LL THRESH	LONG LINE THRESHOLD

5. TEST CONDITIONS FOR WAVEFORMS ARE: ROTATE A3A2 R12 TO FULL CW POSITION SHORT A3A6TP3 TO A3A6TP8 SHORT A3A7TP3 TO A3A7TP6 PRESS A3A7S1
6. USE TEST CONDITIONS FROM NOTE 5 AND EXTERNAL TRIGGER FROM P2-23.
7. USING TEST CONDITIONS FROM NOTE 5 AND EXTERNAL TRIGGER FROM P2-23, A WAVEFORM SIMILAR TO TP4 WILL RESULT. MAXIMUM POSITIVE AMPLITUDE IS +1V. A -1.3V BLANKING SIGNAL IS ALSO PRESENT.
8. USING TEST CONDITIONS FROM NOTE 5 AND EXTERNAL TRIGGER FROM P2-23, A WAVEFORM SIMILAR TO TP4 WILL RESULT. MAXIMUM POSITIVE AMPLITUDE IS +8V.
9. UNLESS OTHERWISE INDICATED: SIGNALS ENTER AT LEFT SIDE OR TOP AND EXIT AT RIGHT SIDE OR BOTTOM OF FUNCTION BLOCKS.

NOTES(CONT.):

10. TO A1A2 XYZ AMPLIFIER FOR IF-DISPLAY SECTIONS (SERIAL PREFIXES 3004A AND ABOVE).
11. Z-AXIS SIGNAL A3A2P1-3 TO A1A2P1-28 (VIA A3A10, W2, A1A10, A1A1, A1A1W1, A1A10). SCALED BY A1A1R1 INTENSITY CONTROL.
12. A3A2R17★ IS A FACTORY SELECTED COMPONENT. ACCEPTABLE VALUES RANGE FROM 121KΩ TO 162KΩ.
13. A3A2R21★ IS A FACTORY SELECTED COMPONENT. THE NOMINAL VALUE AND RANGE OF R21★ DIFFERS BETWEN THE TWO VERSIONS OF THE A3A2 INTENSITY CONTROL. THE R21★ NOMINAL VALUE AND THE RANGE OF EACH VERSION IS LISTED BELOW.

BOARD VERSION	NOMINAL VALUE	ACCEPTABLE RANGE
85662-60025	18.2KΩ	10.0KΩ-28.1KΩ
85662-60245	23.7KΩ	16.2KΩ-31.8KΩ

14. THE VALUES OF R20 AND R25 DIFFER BETWEEN THE TWO VERSIONS OF THE A3A2 INTENSITY CONTROL. THE NOMINAL VALUES FOR EACH VERSION IS LISTED BELOW.

BOARD VERSION	R20 VALUE	R25 VALUE
85662-60025	10.0KΩ	1.0KΩ
85662-60245	2.61KΩ	3.16KΩ

A3A3

A3A3 Line Generator, Circuit Description

A3A3 Line Generator receives a series of digital X and Y display positions, converts them to analog values, and connects them with straight lines. This process, called line generation, is similar to that of dot-to-dot drawing on paper. (See Figure 1.) Two independent line generators are required: one for the X series of values and one for the Y series. For each line there is a setup period following by a drawing period. During the setup period the display is blanked by A3A2 Intensity Control.

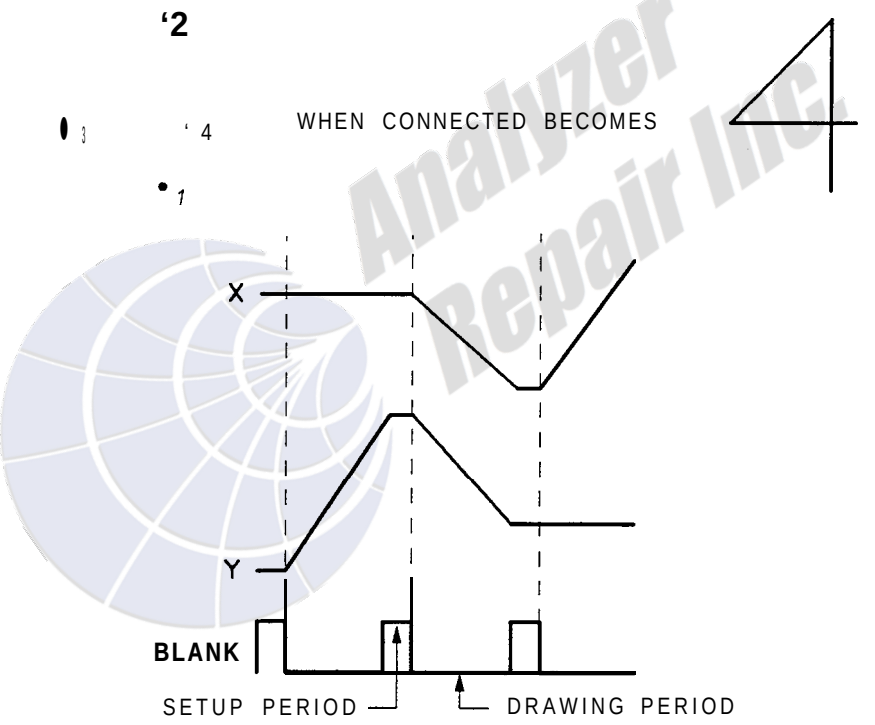

Figure 1. Line Generation Process

Each of the line generators consists of a register, a digital-to-analog converter (DAC), a summing amplifier, a sample and hold circuit, an integrator, and a filter. The X or Y register receives the next display point from the Digital Storage Bus. The DAC converts this number to a current. The summing amplifier then computes a position change AX = "next X" – "present X." During the setup time for the next line, AX and AY are sampled by the Sample and Hold circuit. At the end of the setup time and during the drawing time, AX and AY are held for constant input to the Integrator. During the drawing time, the Integrator output changes linearly from X to X + AX and from Y to Y + AY. This is done by integrating AX

and AY at a constant rate such that the output becomes X + AX and Y + AY; that is, "new X" and "new Y."

X Register Ⓐ

U5 and U6 form a 10-bit X Position Register. When a new X position is present on lines B0-B9 of the Digital Storage Bus, the CHAR line is held low and a positive-going edge on LDX causes U5 and U6 to be loaded with the value of B0-B9. These 10 bits then become the X position input to the X DAC. Characters are drawn by changing only bits 1, 2, and 3 of the X Position register and bits 1 through 4 of the Y Position Register. Strokes of a character are described by a series of X and Y values sent to the Line Generator on the Digital Storage Bus. B4-B6 of the Digital Storage Bus carry the series of X values. When the next X value is present on B4-B6, the CHAR line is held high and a positive-going edge on LDCHAR caused U5 to be loaded with the new values for bits 1 through 3 of the X position.

X DAC Ⓓ

The output of U5 and U6 are the X position input to U4, the X DAC. U4 is a 10-bit multiplying DAC whose output current depends on the digital input code and the voltage at VREF (pin 15). This output current is the analog X position sent to the X Summing Amplifier. The inputs of U4 are clamped to a maximum of +3.6 V by diodes CR1 through CR10.

X Summing Amplifier Ⓖ

The X Summing Amplifier receives the next X position from the X DAC, the present X position from the X Integrator, and an X position shift from the Expand Register. The three signals are summed to give AX = "next X" + "X shift" – "present X." "X shift" is a binary signal of 0 V or +5 V, and the amount of shift is adjusted by X EXP potentiometer R1 (X and Y shift are used to move the display origin from the graticule lower left to the screen lower left). X GAIN potentiometer R4, the X line generator gain adjustment, varies the magnitude of the X line generator output. R4 also has an effect on the accuracy of line positions. XLL potentiometer R6, the X long line adjust, is used to adjust line position accuracy. (See Integrator description.)

X Sample and Hold Ⓙ

The AX value from the Summing Amplifier is held for constant input to the Integrator by the X Sample and Hold circuit. Sampling occurs during the setup period, which lasts 1 μs. Holding occurs during the drawing period, which lasts 4 μs or 19 μs. Q2 and Q3 are on during the sample mode and are driven by the SMPL line. Q1 and Q4 are on during the hold mode and are driven by the HLDX line. (See Figure 2.) Q6 is a dual FET used to provide a high-impedance input to U2. Capacitor C23 is the holding capacitor.

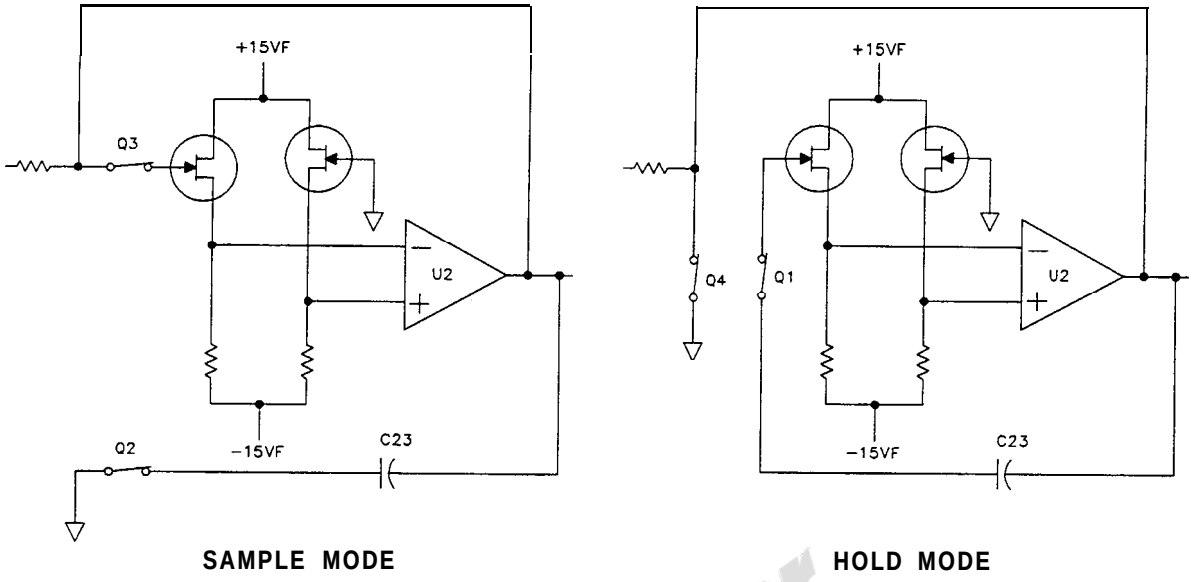

Figure 2. Sample and Hold Modes, Simplified Schematic

X Integrator Ⓛ

U1, C26, and Q5 form an "integrate and hold" circuit whose output is the X display position. During the setup period, Q5 is open, leaving only U1 and C26 holding the present value of X. During the drawing period, Q5 is closed and the constant AX value from the Sample and Hold circuit causes a constant current (proportional to AX) to flow through C26. This constant current through C26 causes the output of U1 to change linearly from the value (Xi) at the last setup period toward a new value $X_i + _1 = X_i$ + AX. When the drawing period ends, Q5 opens and the circuit returns to the hold mode, this time with output at the new X position, X_i. The process of current flow through C26 is equivalent to integrating AX over the drawing period.

The drawing period may last for 4 μs (short line) or 19 μs (long line). The hold period lasts for 1 μs. When the Line Generator is drawing a long line (19 μs), switch Q8 is open and the current through C26 is determined by R15. When the Line Generator is drawing a short line (4 μs), switch Q8 is closed and the current through C26 is determined by R15 in parallel with R7, R18. In either case, the current must be precisely set so that the X position will become $X_i + _1 = X_i$ + AX at the end of the drawing period. In the long line mode, XLL potentiometer R6 of the Summing Amplifier is adjusted to get accurate line positioning. For accuracy in the short line mode, XSL potentiometer R18 must be properly adjusted.

Diodes CR22 and CR23 keep the source of Q5 within 0.7 V of ground during the hold mode. Capacitors C43 and C27 and signal LINTG compensate for gate feedthrough on Q5. R16, C29, and C28 provide frequency compensation for U1.

X Filter ⓞ

The X Filter is a 2.5 MHz low-pass filter which smooths out transients from the X Integrator.

Y Register ⓒ

U9 and U10 form a 10-bit Y Register. When a new Y position is present on B0-B9 of the Digital Storage Bus, the CHAR line is held low and positive-going edge on LDY causes U9 and U10 to be loaded with the value of B0-B9. These 10 bits then become the Y position input to the Y DAC. When characters are being drawn, bits 1 through 4 of the Y Register are changed. BO-B3 of the Digital Storage Bus carry the series of Y values representing the Y components of the character strokes. When the next Y value is present on BO-B3, the CHAR line is held high and a positive-going edge on LDCHAR causes U9 to be loaded with the new values for bits 1 through 4 of the Y position.

Y DAC, Y Summing Amplifier, Y Sample and Hold, Y Integrator, and Y Filter ⓕ ⓘ ⓚ ⓝ ⓟ

The Y DAC, Y Summing Amplifier, Y Sample and Hold, Y Integrator, and Y Filter operate in a manner identical to that of the corresponding X Line Generator circuits.

Expand Register ⓑ

U14 is a 2-bit Expand Register which provides scale and origin-shift information to the X and Y Line Generators. When a new expand value is present on B6 and B8 of the Digital Storage Bus, a positive-going edge on LDEXP causes U14 to be loaded with the value of B6 and B8. A high on B6 will cause a scale increase of 13 percent over normal (the graticule is drawn at normal scale) and an origin shift of 13.6 percent of normal scale. Q16 and Q17 provide buffering from the TTL signals to the analog circuits.

Reference ⓔ

U13 provides the reference voltage to the X and Y DACs. The magnitude of the reference voltage is proportional to the scale of the Line Generator output. For normal scale the reference voltage is nominally -5.12 V. For the three expanded scales, the reference may be -5.8 V, -7.9 V, or -8.6 V.

Y Offset ⓗ

The Y Offset circuit supplies a signal to the Y Summing Amplifier such that the output of the Y Line Generator will be 0 V when the Y Register contains all zeroes and no origin shift is present. YOS potentiometer R43 is used to make the adjustment.

Analyzer Repair Inc.

Long Line Switch Driver Ⓜ

The long Line Switch Driver provides level translation from the TTL signal LLL to the gate signals for Q7 and Q8. A high on LLL turns on Q7 and Q8.

Line Generator liming

Figure 3 shows the timing relationship between the X and Y Line Generator outputs and the drive signals. Changes in the X Register, Y Register, and Expand Register Occur only during the drawing period; that is, when the Sample and Hold circuit is holding. Changes in the LLL signal occur only during the setup period; that is, when the Integrator is holding. The length of the drawing period (either 4 or 19 μs) is determined by A3A2 Intensity Control.

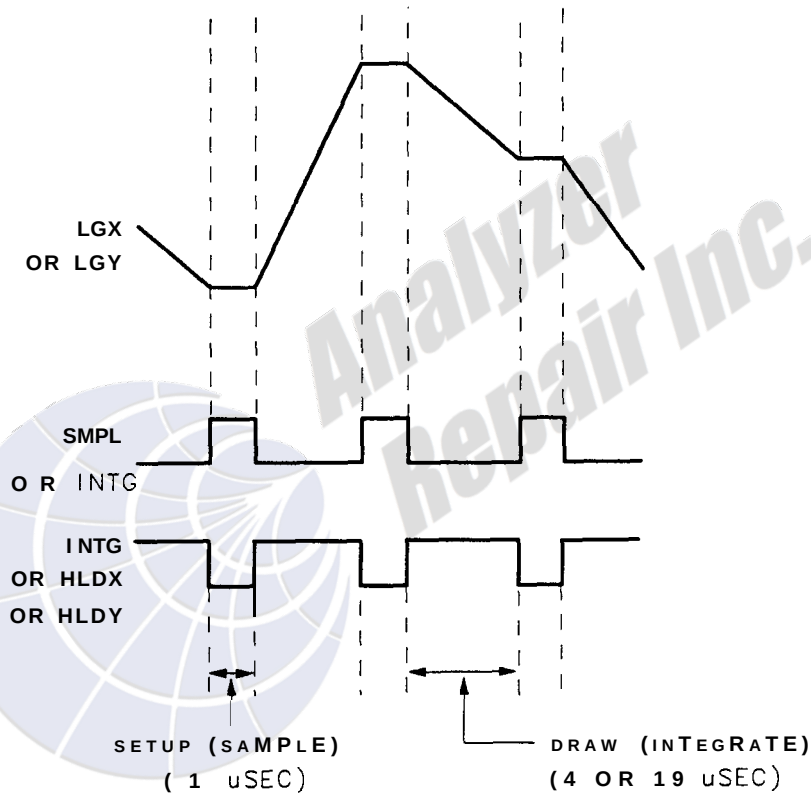

Figure 3. Line Generator Timing

Analyzer Repair Inc.

A3A3 Line Generator, Troubleshooting

The A3A3 Line Generator Assembly converts the digital X and Y display positions from the Digital Storage processor to analog values and draws lines between them. It positions the characters with respect to the graticule and sets the size of the display and graticule.

A distorted CRT display involving both the horizontal and the vertical components is often caused by malfunctions on this assembly. If only the video information is distorted, suspect the A3A8 Analog Digital Converter. Drawing of the characters is controlled by the Character Stroke Memory on the A3A4 Memory Assembly.

If both the X and Y channels are distorted, suspect the Expand Register Ⓑ, Reference Ⓔ, Long Line Switch Driver Ⓜ and/or the INTG or SMPL control signals, as these are common to both channels.

If the positive amplitude at A3A3TP11 is only $2 V, the gate of either Q5 or Q10 has been damaged.

The Long Line switches Q7 and Q8 can be tested as follows. Set A3A2R12 in the LL position (full CW). A3A3TP6 is then a TTL low and the gates of Q7 and Q8 are approximately -15 V. With A3A2R12 in the fully CCW position, A3A3TP6 is a TTL high and the gates of Q7 and Q8 are approximately -1 V.

If it is determined that any of the Sample and Hold FETs Q1 through Q4 or Q12 through Q15 are defective, the best procedure is to replace all four since it is not easy to determine which FET is defective.

The Digital Storage Test Programs can be used to troubleshoot the analog functions on A3A3. When using these programs, the LL/SL pot A3A2R12 should be set to the full CW position (LL). The SL (full CCW) position should also be examined as it exercises the circuitry at the highest speeds.

Digital Storage Test Program 5 and the CRT display are used to verify the input Registers and the DACs. It is not necessary to remove A3A1 when testing A3A3. The display in Figure 4 is the result of a Y DAC or Y Register malfunction. Notice that the malfunction causes vertical jumps in the test waveform. A defective component in the X channel would cause horizontal jumps.

Analyzer Repair Inc.

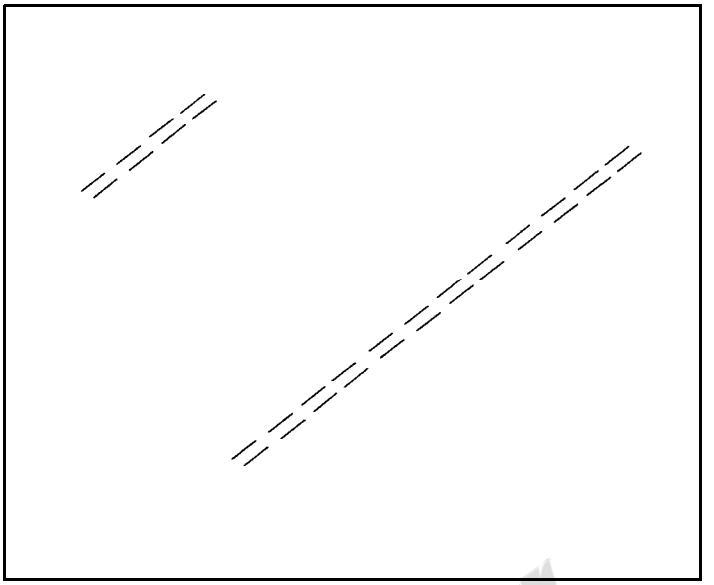

Figure 4. Digital Storage Test Program 5 Display with Defective Y Channel

The Expand Register Ⓑ and Reference Ⓔ set the V_{REF} levels for the X and Y DACs. This provides both magnification and origin shift for the display. As shown in Table 1, four voltage levels are generated. These levels are present when Digital Storage Test Program 3 is used (again it is not necessary to remove A3A1). The reference voltage is measured at A3A3TP8. With A3A2R12 in the LL position and the oscilloscope sweep time set to 2 ms/div, the waveform shown in Figure 5 will result. In the SL position the waveform is identical for a sweep time of 1 ms/div.

Table 1. Reference Voltage Truth Table

	Reference Voltage			
	-5.1 V	-5.8 V	-7.9 V	-8.6 V
U14 pin 3	H	L	H	L
U14 pin 11	H	H	L	L

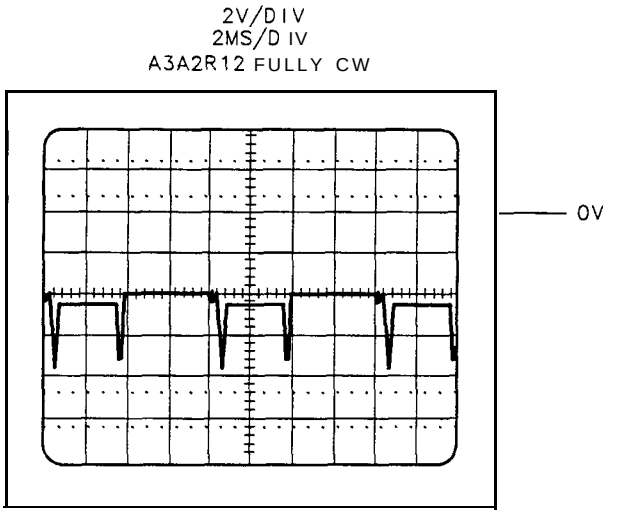

Figure 5. Reference Voltages

The following program is useful in troubleshooting problems related to the dynamic operation of the Summing Amplifiers, Sample and Hold, and Integrators. It draws a line from the lower left corner of the display to the upper right corner and then back to the lower left.

Key in the following:

Instrument Preset	Comments
[BLANK] TRACE A	
[BLANK] TRACE B	
[SHIFT] Recorder Upper Right	WRITE:
1056 Hz	Ski p Page
[SHIFT] Recorder Lower Left	DSPL ADRS
0 Hz	
[SHIFT] Recorder Upper Right	WRITE:
1026 Hz	Vector Command
0 Hz	X,Ypair 1
0 Hz	X, Y pair 1
1023 Hz	X, Y pair 2
1023 Hz	X, Y pair 2
0 Hz	X,Ypair 3
0 Hz	X, Y pair 3
1056Hz	Ski p Page
[SHIFT] Recorder Lower Left	DSPL ADRS
2048 Hz	
[SHIFT] Recorder Upper Right	WRITE
1056Hz	Ski p Page

Analyzer Repair Inc.

The waveforms in Figure 6 show the X and Y channel outputs for this program.

The +5 V pulse at A3A3TP12 is the "next X" data from the X DAC. In this program the "X shift" value from the Expand Register is 0 V. The "present X" value is the waveform of A3A3TP10. The ouput at A3A3TP12 is AX = "next X" + "X shift" – "present X." The small spikes every 5 μs indicate the beginning and end of the 1 μs sampling period. A3A3TP4 shows the output of the Sample and Hold circuitry. Note that the output is inverted relative to the output of the summing amplifier.

A3A3TP10 shows the result of integrating AX over the drawing period. See "A3A3 Line Generator Circuit Description" in this chapter for a more complete description of the operation of the Integrator circuit.

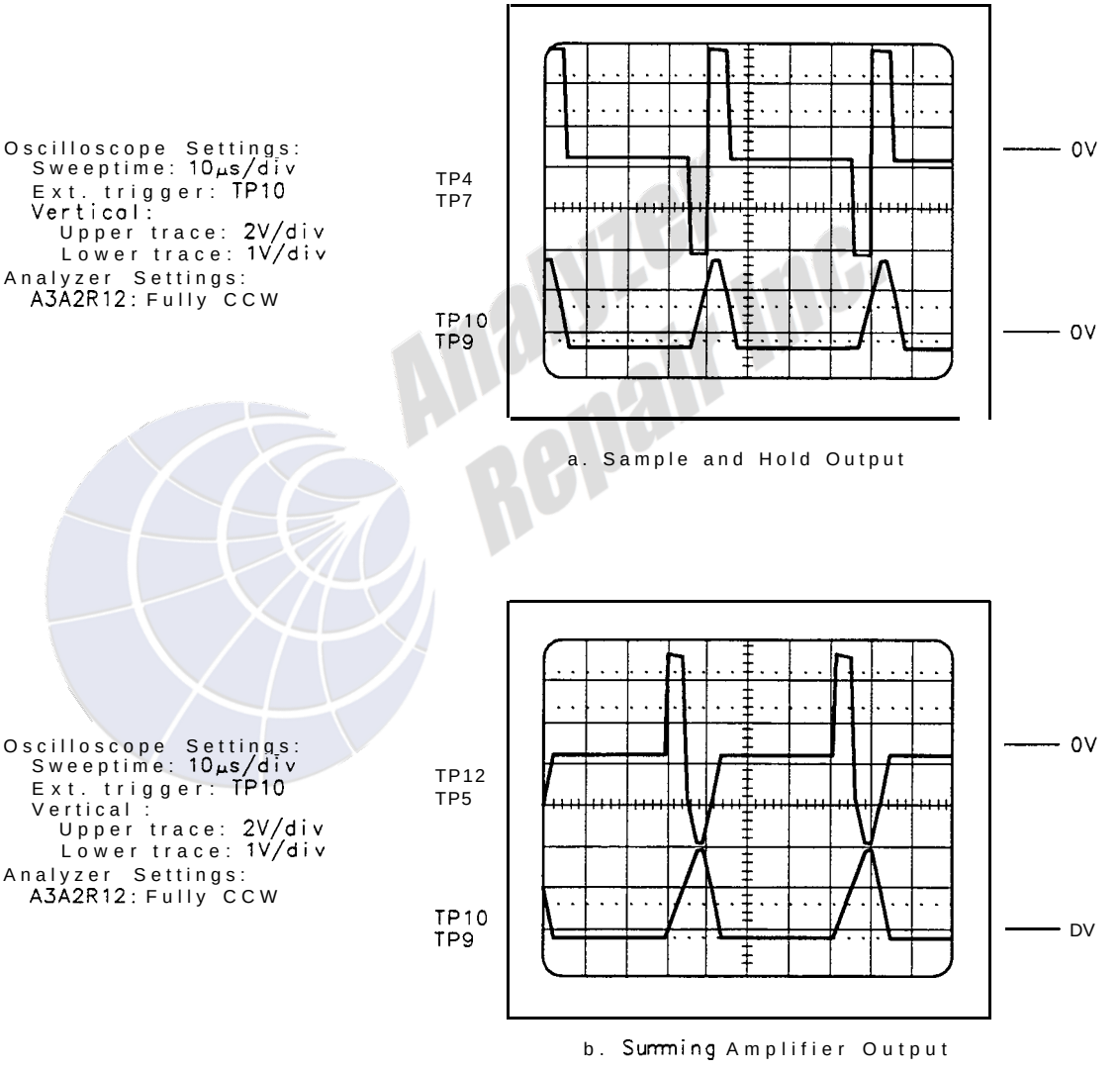

Figure 6. Line Generator X and Y Channel Outputs

HP Part Number 85662-60128

A3A3 Line Generator

Reference Designatior	HP Part Number	C. D	Qty	Description	Mfr Code	Mfr Part Number
A3A3	85662-60128	3	1	BOARD ASSEMBLY, LINE GENERATOR	2848(	85662-60128
A3A3C1	0180-0374	3	1	CAPACITOR-FXD 10UF+-10% 20VDC TA	56285	150D106X9020B2-DYS
A3A3C2	0180-0374	3	1	CAPACITOR-FXD 10UF+-10% 20VDC TA	56285	150D106X9020B2-DYS
A3A3C3	0180-0374	3	1	CAPACITOR-FXD 10UF+-10% 20VDC TA	56285	150D106X9020B2-DYS
A3A3C4	0160-2257	3	1	CAPACITOR-FXD 10PF +-5% 500VDC CER 0+-6(	52763	2RDPLX0501RNP0
A3A3C5	0160-2257	3	1	CAPACITOR-FXD 10PF +-5% 500VDC CER 0+-6(	52763	2RDPLX0501RNP0
A3A3C6	0160-4084	8	1	CAP-FXD 0.1uF 50 V	56289	1C20X7R104M050B
A3A3C7	0160-4084	8	1	CAP-FXD 0.1uF 50 V	56289	1C20X7R104M050B
A3A3C8	0160-4084	8	1	CAP-FXD 0.1uF 50 V	56289	1C20X7R104M050B
A3A3C9	0160-4084	8	1	CAP-FXD 0.1uF 50 V	56289	1C20X7R104M050B
A3A3C10	0160-4084	8	1	CAP-FXD 0.1uF 50 V	56289	1C20X7R104M050B
A3A3C11	)160-4084	8	1	CAP-FXD 0.1uF 50 V	56289	1C20X7R104M050B
A3A3C12	3160-4084	8	1	CAP-FXD 0.1uF 50 V	56289	1C20X7R104M050B
A3A3C13	3160-4084	a	1	CAP-FXD 0.1uF 50 V	56289	1C20X7R104M050B
A3A3C14	)160-4084	8	1	CAP-FXD 0.1uF 50 V	56289	1C20X7R104M050B
A3A3C15	3160-4084	8	1	CAP-FXD 0.1uF 50 V	56289	1C20X7R104M050B
A3A3C16	1160-4084	a	1	CAP-FXD 0.1uF 50 V	56289	1C20X7R104M050B
A3A3C17	)160-4084	8	1	CAP-FXD 0.1uF 50 V	56289	1C20X7R104M050B
A3A3C18	)160-4084	8	1	:AP-FXD 0.1uF 50 V	56289	1C20X7R104M050B
A3A3C19	)160-4084	a	1	:AP-FXD 0.1uF 50 V	56289	1C20X7R104M050B
A3A3C20	1160-4084	8	1	CAP-FXD 0.1uF 50 V	56289	1C20X7R104M050B
A3A3C21	)160-2250	6	1	:AP-FXD 5.1pF 500 V	52763	
A3A3C22	)160-2250	6	1	:AP-FXD 5.1pF 500 V	52763	
A3A3C23	1160-3067	5	1	CAPACITOR-FXD 200PF +-5% 300VDC MICA 0+7	09023	CD15FD201J03
A3A3C24	)160-2250	6	1	:AP-FXD 5.1pF 500 V	52763	
A3A3C25	)160-3067	5	1	CAPACITOR-FXD 200PF +-5% 300VDC MICA 0+7	09023	CD15FD201J03
A3A3C26	)160-2675	9	1	CAPACITOR-FXD 3900PF +-1% 300VDC MICA 0+	09023	CD19.5FD392F03
A3A3C27*				IAY NOT BE INSTALLED.		
				EFER TO 85662-60128 SCHEMATIC.		
A3A3C28	)160-2250	6	1	:AP-FXD 5.1pF 500 V	52763	
A3A3C29	)160-3995	B	1	CAPACITOR-FXD 390DPF +-10% 250VDC CER		855-250V Y5R 392K
A3A3C30	)160-3995	B	1	CAPACITOR-FXD 3900PF +-10% 250VDC CER		855-250V Y5R 392K
A3A3C31	)160-2675	3	1	CAPACITOR-FXD 3900PF +-1% 300VDC MICA 0+	09023	CD19.5FD392F03
A3A3C32*				IAY NOT BE INSTALLED.		
				EFER TO 85662-60128 SCHEMATIC.		
A3A3C33	)160-2250	5	1	:AP-FXD 5.1pF 500 V	52763	
A3A3C34	)140-0191	3	1	:AP-FXD 56pF 300 V MICA	09023	CD15ED560J03
A3A3C35	1140-0199	5	1	CAPACITOR-FXD 240PF +-5% 300VDC MICA	09023	CD15FD241J03
A3A3C36	1160-3536	3	1	CAPACITOR-FXD 620PF +-5% 100VDC MICA 0+7	09023	CD15FC621J03
A3A3C37	1140-0191	3	1	:AP-FXD 56pF 300 V MICA	09023	CD15ED560J03
A3A3C38	)140-0199	5	1	CAPACITOR-FXD 240PF +-5% 300VDC MICA	09023	CD15FD241J03
A3A3C39	)160-3536	3	1	CAPACITOR-FXD 620PF +-5% 100VDC MICA 0+7	09023	CD15FC621J03
A3A3C40	)160-2055	9	1	CAPACITOR-FXD .01UF +80-20% 100VDC CER		805-504 Y5V 1032
A3A3C41	)160-2055	9	1	CAPACITOR-FXD .01UF +BO-20% 100VDC CER		805-504 Y5V 1032
A3A3C42	)160-2055	9	1	CAPACITOR-FXD .01UF +80-20% 100VDC CER		805-504 Y5V 1032
A3A3C43	)160-2241	5	1	AP-FXD 2.2pF 500 V	52763	
A3A3C44	)160-2241	5	1	.AP-FXD 2.2pF 500 V	52763	

**Indicates factory-selected value*

HP Part Number 85662-60128

A3A3 Line Generator

Reference Designation	HP Part Number	C D	Qty	Description	Mfr Code	Mfr Part Number
A3A3C45	0160-2264		1	CAPACITOR-FXO 20PF +-5% 500VOC CER 0+-31	5276:	2RDPLX05020RNP0
A3A3C46	0160-2264		1	CAPACITOR-FXO 20PF +-5% 500VDC CER 0+-3(	5276:	2RDPLX05020RNP0
A3A3C48	0160-4084		1	CAP-FXD 0.1uF 50 V	5628(	1C20X7R104M050B
A3A3C49	0160-4084		1	CAP-FXD 0.1uF 50 V	5628(	1C20X7R104M050B
A3A3CR1	1901-0535		1	DIODE-SCHOTTKY SM SIG		
A3A3CR2	1901-0535		1	DIODE-SCHOTTKY SM SIG		
A3A3CR3	1901-0535		1	DIODE-SCHOTTKY SM SIG		
A3A3CR4	1901-0535		1	DIODE-SCHOTTKY SM SIG		
A3A3CR5	1901-0535		1	DIODE-SCHOTTKY SM SIG		
A3A3CR6	1901-0535		1	DIODE-SCHOTTKY SM SIG		
A3A3CR7	1901-0535		1	DIODE-SCHOTTKY SM SIG		
A3A3CR8	1901-0535		1	DIODE-SCHOTTKY SM SIG		
A3A3CR9	1901-0535		1	DIODE-SCHOTTKY SM SIG		
A3A3CR10	1901-0535		1	DIODE-SCHOTTKY SM SIG		
A3A3CR11	1901-0535		1	DIODE-SCHOTTKY SM SIG		
A3A3CR12	1901-0535		1	DIODE-SCHOTTKY SM SIG		
A3A3CR13	1901-0535		1	DIODE-SCHOTTKY SM SIG		
A3A3CR14	1901-0535		1	DIODE-SCHOTTKY SM SIG		
A3A3CR15	1901-0535		1	DIODE-SCHOTTKY SM SIG		
A3A3CR16	1901-0535		1	DIODE-SCHOTTKY SM SIG		
A3A3CR17	1901-0535		1	DIODE-SCHOTTKY SM SIG		
A3A3CR18	1901-0535		1	DIODE-SCHOTTKY SM SIG		
A3A3CR19	1901-0535		1	DIODE-SCHOTTKY SM SIG		
A3A3CR20	1901-0535		1	DIODE-SCHOTTKY SM SIG		
A3A3CR21	1901-0040		1	DIODE-SWITCHING 30V 50MA 2NS DO-35	71468	
A3A3CR22	1901-0040		1	DIODE-SWITCHING 30V 50MA 2NS DO-35	71468	
A3A3CR23	1901-0040		1	DIODE-SWITCHING 30V 50MA 2NS DO-35	71468	
A3A3CR24	1901-0040		1	DIODE-SWITCHING 30V 50MA 2NS DO-35	71468	
A3A3CR25	1901-0535		1	DIODE-SCHOTTKY SM SIG		
A3A3CR26	1901-0040		1	DIODE-SWITCHING 30V 50MA 2NS DO-35	71468	
A3A3CR27	1901-0535		1	DIODE-SCHOTTKY SM SIG		
A3A3CR28	1901-0535		1	DIODE-SCHOTTKY SM SIG		
A3A3L1	9140-0210		1	INDUCTOR RF-CH-MLD 100UH +-5% .166D-INX.	99800	1537-76
A3A3L2	1140-0210		1	INDUCTOR RF-CH-MLD 100UH +-5% .166D-INX.	99800	1537-76
A3A3L3	9100-1618		1	INDUCTOR RF-CH-MLD 5.6UH +-10% .166D-INX	99800	1537-30
A3A3L4	9100-1620		1	INDUCTOR RF-CH-MLD 15UH +-10% .166D-INX.	99800	1537-40
A3A3L5	9100-1618		1	INDUCTOR RF-CH-MLD 5.6UH +-10% .166D-INX	99800	1537-30
A3A3L6	9100-1620		1	INDUCTOR RF-CH-MLD 15UH +-10% .166D-INX.	99800	1537-40
A3A3MP1	0040-0751		1	EXTR-PC BD ORN POLYC .062-IN-BD-THKNS 1-		
A3A3MP2	0480-0073		2	PIN-ROLL .062-IN-DIA .25-IN-LG BE-CU	72962	99-012-062-0250
A3A3MP3				NOT ASSIGNED		
A3A3Q1	1855-0081		1	TRANSISTOR J-FET N-CHAN D-MODE SI	34677	
A3A3Q2	1855-0081		1	TRANSISTOR J-FET N-CHAN D-MODE SI	34677	
A3A3Q3	1855-0081		1	TRANSISTOR J-FET N-CHAN D-MODE SI	34677	
A3A3Q4	1855-0081		1	TRANSISTOR J-FET N-CHAN D-MODE SI	34677	
A3A3Q5	1855-0241		1	TRANSISTOR MOSFET N-CHAN E-MODE TO-72 SI		
A3A3Q6	1855-0050		1	TRANSISTOR-JFET DUAL N-CHAN D-MODE SI PD	34677	
A3A3Q7	1855-0020		1	TRANSISTOR J-FET N-CHAN D-MODE TO-18 SI	04713	SFE793

Analyzer Repair Inc.

**Indicates factory-selected value*

HP Part Number 85662-60128

A3A3 Line Generator

Reference Designation	HP Part Number	CD	Qty	Description	Mfr Code	Mfr Part Number
A3A3Q8	1855-0039	8	1	TRANSISTOR J-FET N-CHAN D-MODE TO-18 SI	04713	SFE793
A3A3Q9	1853-0034	0		TRANSISTOR PNP SI TO-18 PD=360MW	04713	
A3A3Q10	1855-0241	5	1	TRANSISTOR MOSFET N-CHAN E-MODE TO-72 SI		
A3A3Q11	1855-0050	4	1	TRANSISTOR-JFET DUAL N-CHAN D-MODE SI PD	34677	
A3A3Q12	1855-0081	1	1	TRANSISTOR J-FET N-CHAN D-MODE SI	34677	
A3A3Q13	1855-0081	1	1	TRANSISTOR J-FET N-CHAN D-MODE SI	34677	
A3A3Q14	1855-0081	1	1	TRANSISTOR J-FET N-CHAN D-MODE SI	34677	
A3A3Q15	1855-0081	1	1	TRANSISTOR J-FET N-CHAN D-MODE SI	34677	
A3A3Q16	1853-0034	0	1	TRANSISTOR PNP SI TO-18 PD=360MW	04713	
A3A3Q17	1853-0034	0	1	TRANSISTOR PNP SI TO-18 PD=360MW	04713	
A3A3R1	2100-3356	1	1	RESISTOR-TRMR 200K 10% TKF SIDE-ADJ 1-TR	32997	3386X-Y46-204
A3A3R2	2100-3357	2	1	RESISTOR-TRMR 500K 10% TKF SIDE-ADJ 1-TR	32997	3386X-Y46-504
A3A3R3	0698-3440	7	1	RESISTOR 196 1% .125W TF TC=0+-100	19701	SFR25H
A3A3R4	2100-3207	1	1	RESISTOR-TRMR 5K 10% TKF SIDE-ADJ 1-TRN	32997	3386X-Y46-502
A3A3R5	2100-3207	1	1	RESISTOR-TRMR 5K 10% TKF SIDE-ADJ 1-TRN	32997	3386X-Y46-502
A3A3R6	2100-3207	1	1	RESISTOR-TRMR 5K 10% TKF SIDE-ADJ 1-TRN	32997	3386X-Y46-502
A3A3R7	2100-3351	6	1	RESISTOR-TRMR 500 10% TKF SIDE-ADJ 1-TRN	32997	3386X-146-501
A3A3R8	2100-3351	6	1	RESISTOR-TRMR 500 10% TKF SIDE-ADJ 1-TRN	32997	3386X-Y46-501
A3A3R9	2100-3207	1	1	RESISTOR-TRMR 5K 10% TKF SIDE-ADJ 1-TRN	32997	3386X-Y46-502
A3A3R10	0698-5350	2	1	RESISTOR 2.613K +-0.1% .125W TF TC=0+-25	19701	5033R
A3A3R11	0698-5350	2	1	RESISTOR 2.6131: +-0.1% .125W TF TC=0+-25	19701	5033R
A3A3R12	0698-3157	3	1	RESISTOR 19.6K 1% .125W TF TC=0+-100	19701	SFR25H
A3A3R13	0698-5350	2	1	RESISTOR 2.613K +-0.1% .125W TF TC=0+-25	19701	5033R
A3A3R14	0698-5350	2	1	RESISTOR 2.613K +-0.1% .125W TF TC=0+-25	19701	5033R
A3A3R15	0698-7095	6	1	RESISTOR 11K +-0.25% .125W TF TC=0+-50	19701	5033R
A3A3R16	0698-3428	1	1	RESISTOR 14.7 1% .125W TF TC=0+-100	91637	CMF-55-1, T-1
A3A3R17	0698-0085	0	1	RESISTOR 2.61K 1% .125W TF TC=0+-100	19701	SFR25H
A3A3R18	0698-5350	2	1	RESISTOR 2.6131: +-0.1% .125W TF TC=0+-25	19701	5033R
A3A3R19	0757-0442	9	1	RESISTOR 10K +-1% .125W TF TC=0+-100	19701	SFR25H
A3A3R20	0757-0438	3	1	RESISTOR 5.11K +-1% .125W TF TC=0+-100	19701	SFR25H
A3A3R21	0757-0462	3	1	RESISTOR 75K +-1% .125W TF TC=0+-100	19701	SFR25H
A3A3R22	0698-3440	7	1	RESISTOR 196 1% .125W TF TC=0+-100	19701	SFR25H
A3A3R23	0698-0084	9	1	RESISTOR 2.15K 1% .125W TF TC=0+-100	19701	SFR25H
A3A3R24	0757-0424	7	1	RESISTOR 1.1K +-1% .125W TF TC=0+-100	19701	SFR25H
A3A3R25	0698-3161	9	1	RESISTOR 38.3K 1% .125W TF TC=0+-100	19701	SFR25H
A3A3R26	0757-0444	1	1	RESISTOR 12.1K +-1% .125W TF TC=0+-100	19701	SFR25H
A3A3R27	0698-5350	2	1	RESISTOR 2.613K +-0.1% .125W TF TC=0+-25	19701	5033R
A3A3R28	0698-5350	2	1	RESISTOR 2.613K +-0.1% .125W TF TC=0+-25	19701	5033R
A3A3R29	0698-5350	2	1	RESISTOR 2.613K +-0.1% .125W TF TC=0+-25	19701	5033R
A3A3R30	0698-7095	6	1	RESISTOR 11K +-0.25% .125W TF TC=0+-50	19701	5033R
A3A3R31	0698-3428	1	1	RESISTOR 14.7 1% .125W TF TC=0+-100	91637	CMF-55-1, T-1
A3A3R32	0757-0442	9	1	RESISTOR 10K +-1% .125W TF TC=0+-100	19701	SFR25H
A3A3R33	0698-0085	0	1	RESISTOR 2.61K 1% .125W TF TC=0+-100	19701	SFR25H
A3A3R34	0757-0442	9	1	RESISTOR 10K +-1% .125W TF TC=0+-100	19701	SFR25H
A3A3R35	0698-3136	8	1	RESISTOR 17.8K 1% .125W TF TC=0+-100	19701	SFR25H
A3A3R36	0757-0438	3	1	RESISTOR 5.11K +-1% .125W TF TC=0+-100	19701	SFR25H
A3A3R37	0698-3440	7	1	RESISTOR 196 1% .125W TF TC=0+-100	19701	SFR25H

**Indicates factory-selected value*

HP Part Number 85662-60128

A3A3 Line Generator

Reference Designation	HP Part Number	C D	Qty	Description	Mfr Code	Mfr Part Number
A3A3R38	0698-0084	9	1	RESISTOR 2.15K 1% .125W TF TC=0+-100	19701	SFR25H
A3A3R39	0698-3157	3	1	RESISTOR 19.6K 1% .125W TF TC=0+-100	19701	SFR25H
A3A3R40	0698-3157	3	1	RESISTOR 19.6K 1% .125W TF TC=0+-100	19701	SFR25H
A3A3R41	0698-3157	3	1	RESISTOR 19.6K 1% .125W TF TC=0+-100	19701	SFR25H
A3A3R42	0698-3157	3	1	RESISTOR 19.6K 1% .125W TF TC=0+-100	19701	SFR25H
A3A3R43	2100-3354	9	1	RESISTOR-TRMR 50K 10% TKF SIDE-ADJ 1-TRN	32997	3386X-146-503
A3A3R44	0698-3157	3	1	RESISTOR 19.6K 1% .125W TF TC=0+-100	19701	SFR25H
A3A3R45	0698-3441	8	1	RESISTOR 215 1% .125W TF TC=0+-100	19701	SFR25H
A3A3R46	0757-0442	9	1	RESISTOR 10K +-1% .125W TF TC=0+-100	19701	SFR25H
A3A3R47*	0698-6360	6	1	RESISTOR 10K +-0.1% .125W TF TC=0+-25	19701	5033R
A3A3R48*	0698-6360	6	1	RESISTOR 10K +-0.1% .125W TF TC=0+-25	19701	5033R
A3A3R49	0698-3150	6	1	RESISTOR 2.37K 1% .125W TF TC=0+-100	19701	SFR25H
A3A3R50	0757-0424	7	1	RESISTOR 1.1K +-1% .125W TF TC=0+-100	19701	SFR25H
A3A3R51	0698-0084	9	1	RESISTOR 2.15K 1% .125W TF TC=0+-100	19701	SFR25H
A3A3R52	0757-0421	4	1	RESISTOR 825 +-1% .125W TF TC=0+-100	19701	SFR25H
A3A3R53	0757-0438	3	1	RESISTOR 5.11K +-1% .125W TF TC=0+-100	19701	SFR25H
A3A3R54	0757-0465	6	1	RESISTOR 100K +-1% .125W TF TC=0+-100	19701	SFR25H
A3A3R55	0757-0814	9	1	RESISTOR 511 +-1% .5W TF TC=0+-100	19701	5053R
A3A3TP1	0360-0535	0	1	TERMINAL-TEST POINT .330IN ABOVE	46819	
A3A3TP2	0360-0535	0	1	TERMINAL-TEST POINT .330IN ABOVE	46819	
A3A3TP3	0360-0535	0	1	TERMINAL-TEST POINT .330IN ABOVE	46819	
A3A3TP4	0360-0535	0	1	TERMINAL-TEST POINT .330IN ABOVE	46819	
A3A3TP5	0360-0535	0	1	TERMINAL-TEST POINT .330IN ABOVE	46819	
A3A3TP6	0360-0535	0	1	TERMINAL-TEST POINT .330IN ABOVE	46819	
A3A3TP7	0360-0535	0	1	TERMINAL-TEST POINT .330IN ABOVE	46819	
A3A3TP8	0360-0535	0	1	TERMINAL-TEST POINT .330IN ABOVE	46819	
A3A3TP9	0360-0535	0	1	TERMINAL-TEST POINT .330IN ABOVE	46819	
A3A3TP10	0360-0535	0	1	TERMINAL-TEST POINT .330IN ABOVE	46819	
A3A3TP11	0360-0535	0	1	TERMINAL-TEST POINT .330IN ABOVE	46819	
A3A3TP12	0360-0535	0	1	TERMINAL-TEST POINT .330IN ABOVE	46819	
A3A3U1	1826-0079	6	1	IC OP AMP WB TO-99 PKG	34371	HA2-2625-5
A3A3U2	1826-0089	8	1	IC OP AMP WB TO-99 PKG	34371	HA2-2525-5 (SELECTED)
A3A3U3	1826-0079	6	1	IC OP AMP WB TO-99 PKG	34371	HA2-2625-5
A3A3U4	1826-0684	9	1	D/A 12-BIT 18-CBRZ/SDR CMOS	24355	AD7541BD(SEL)
A3A3U5	1820-1444	9	1	IC MUXR/DATA-SEL TTL LS Z-TO-1-LINE QUAD	01295	SN74LS298N
A3A3U6	1820-1196	8	1	IC FF TTL LS D-TYPE POS-EDGE-TRIG COM CL	01295	SN74LS174N
A3A3U7	1826-0079	6	1	IC OP AMP WB TO-99 PKG	34371	HA2-2625-5
A3A3U8	1826-0684	9	1	D/A 12-BIT 18-CBRZ/SDR CMOS	24355	AD7541BD(SEL)
A3A3U9	1820-1444	9	1	IC MUXR/DATA-SEL TTL LS Z-TO-1-LINE QUAD	01295	SN74LS298N
A3A3U10	1820-1196	8	1	IC FF TTL LS D-TYPE POS-EDGE-TRIG COM CL	01295	SN74LS174N
A3A3U11	1826-0079	6	1	IC OP AMP WB TO-99 PKG	34371	HA2-2625-5
A3A3U12	1826-0089	8	1	IC OP AMP WB TO-99 PKG	34371	HA2-2525-5 (SELECTED)
A3A3U13	1826-0081	0	1	IC OP AMP WB TO-99 PKG	27014	LM318H
A3A3U14	1820-1195	7	1	IC FF TTL LS D-TYPE POS-EDGE-TRIG COM CL	01295	SN74LS175N
A3A3U15	1820-1197	9	1	IC GATE TTL LS NAND QUAD 2-INP	01295	SN74LS00N
A3A3VR1	1902-3036	3	1	DIODE-ZNR 3.16V 5% DO-7 PD=.4W TC=-.064%	04713	
A3A3VR2	1902-0686	3	1	DIODE-ZNR 6.2V 2% DO-7 PD=.4W TC=+.002%	04713	1N825
A3A3VR3	1902-3094	3	1	DIODE-ZNR 5.11V 2% DO-35 PD=.4W	04713	

**Indicates factoy-selected value*

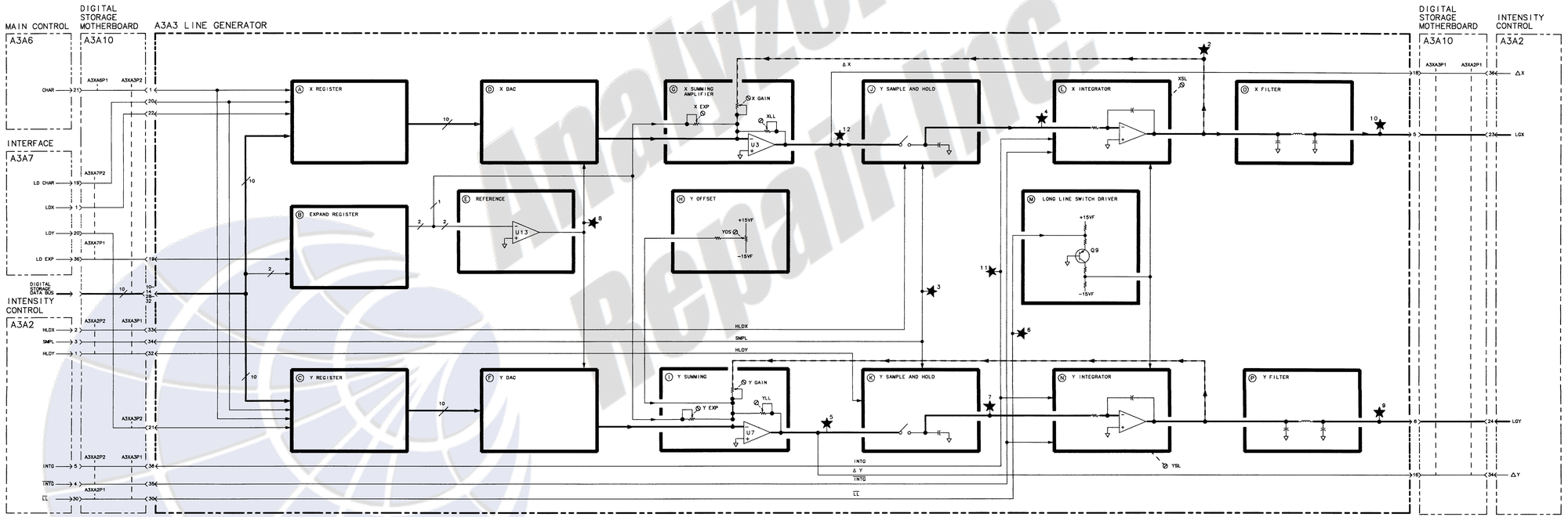

A3A3 LINE GENERATOR, BLOCK DIAGRAM

Analyzer Repair Inc.

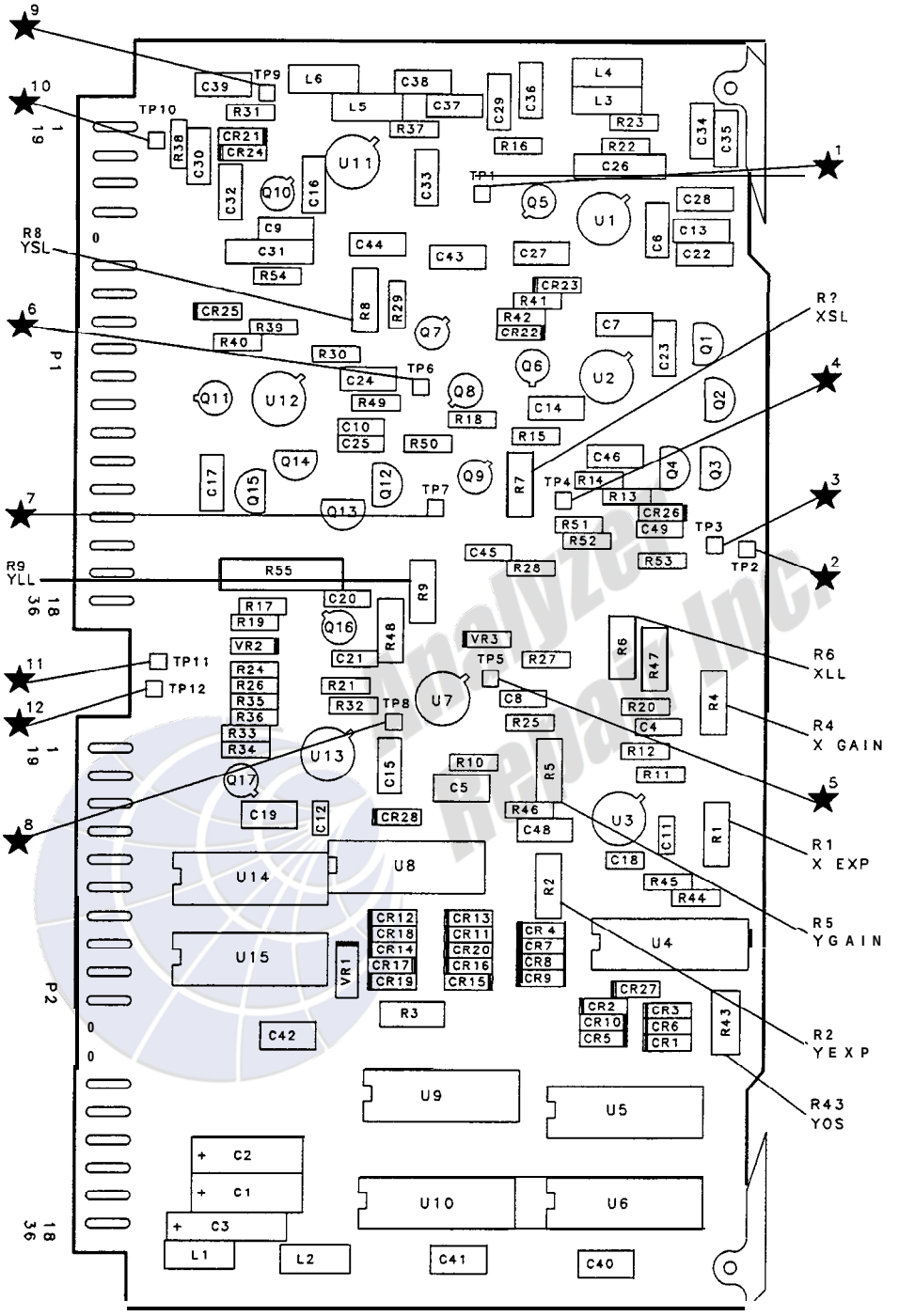

A3A3 Line Generator Component Locations, 85662-60128

A3A3 LINE GENERATOR
85662-60128 (1 OF 2)
(SERIAL PREFIX: 2403A)

P1

PIN	SIGNAL	TO/FROM	FUNCTION BLOCK
1	GND		Q
19	GND		Q
2	GND		Q
20	GND		Q
3	GND		Q
21	GND		Q
4	GND		Q
22	GND		Q
5	LGX	A3A2P1-23	Q
23	GND		Q
6	LGY	A3A2P1-24	P
24	GND		Q
7	GND		a
25	GND		Q
8	GND		Q
26	GND		Q
9	GND		a
27	GND		a
10	GND		Q
28	GND		Q
11	GND		Q
29	GND		Q
12	GND		Q
30	LLL	A3A2P1-30	M
13	GND		Q
31	GND		Q
14	GND		Q
32	HLDY	A3A2P2-1	K
15	GND		Q
33	HLDX	A3A2P2-2	J
16	Δ Y	A3A2P1-34	I
34	SMPL	A3A2P2-3	J K
17	GND		Q
35	LINTG	A3A2P2-4	L N
18	Δ X	A3A2P1-36	G
36	INTG	A3A2P2-5	L N

P2

PIN	SIGNAL	TO/FROM	FUNCTION BLOCK
1	CHAR	A3A6P1-21	A C
19	LDEXP	A3A7P2-19	B
2	NC		
20	LDCHAR	A3A7P2-19	A C
3	NC		
21	LDY	A3A7P2-20	C
4	NC		
22	LDX	A3A7P2-1	A
5	NC		
23	NC		
6	NC		
24	NC		
7	NC		
25	NC		
8	NC		
26	NC		
9	NC		
27	NC		
10	BØ	DIGITAL STORAGE BUS	A C
28	B1		A C
11	B2		A C
29	B3		A C
12	B4		A C
30	B5		A C
13	B6		A B C
31	B7		A C
14	B8		A B C
32	B9		A C
15	NC		
33	NC		
16	DGND		Q
34	DGND		Q
17	+5V		Q
35	AGND		Q
18	+15V		Q
36	−15V		Q

Analyzer Repair Inc.

A3A3 Line Generator, Schematic Diagram (1 of 2)

A3A3 LINE GENERATOR
85662-60128 (2 OF 2)
(SERIAL PREFIX: 2403A)

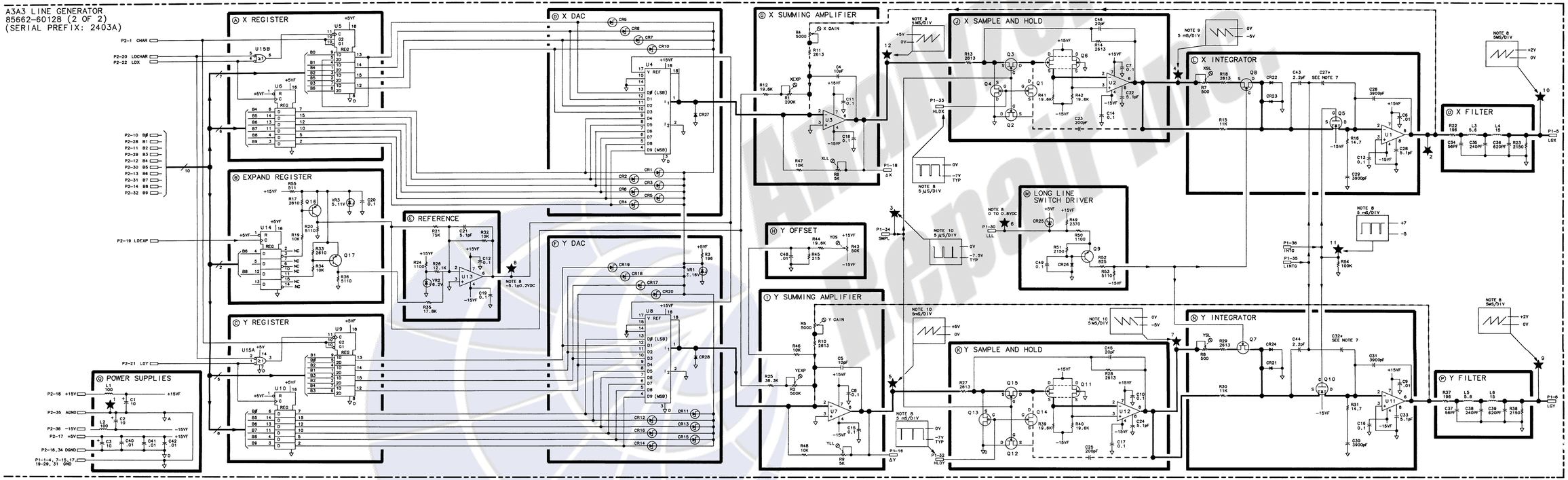

NOTES:

1. REFERENCE DESIGNATORS WITHIN THIS ASSEMBLY ARE ABBREVIATED. FOR COMPLETE REFERENCE DESIGNATION, PREFIX ABBREVIATION WITH ASSEMBLY DESIGNATION.
2. UNLESS OTHERWISE INDICATED: RESISTANCE IS IN OHMS (Ω) CAPACITANCE IS IN MICROFARADS(μF) INDUCTANCE IS IN MICROHENRIES(μH)
3. UNLESS OTHERWISE INDICATED: SIGNALS ENTER AT LEFT SIDE AND EXIT AT RIGHT SIDE OF FUNCTION BLOCKS.
4. MNEMONIC TABLE:

MNEMONIC	DESCRIPTION
XSL	X SHORT LINE
XLL	X LONG LINE
INTG	INTEGRATE
LINTG	LONG INTEGRATE
YSL	Y SHORT LINE
LYLL	Y LONG LINE
LLL	LONG LINE
HLDY	HOLD Y
LGY	LINE GEN Y POSITION
LGX	LINE GEN X POSITION
HLDX	HOLD X
SMPL	SAMPLE
ΔX	DELTA X
ΔY	DELTA Y
LDX	LOAD X REGISTER
LDY	LOAD Y REGISTER
LDEXP	LOAD EXPAND REGISTER
CHAR	CHARACTER MODE
LDCHAR	LOAD CHARACTER REGISTER
B9-B9	DIGITAL STORAGE BUS BITS 9-9

5. Q5 AND Q10 ARE N-CHANNEL ENHANCEMENT MODE FETS WITH THE FOLLOWING PIN CONFIGURATION (TOP VIEW).

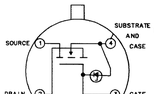

6. UNLESS OTHERWISE INDICATED, LOGIC YELS LEVELS ARE TTL: +2.0V TO 5.0V=LOGIC "1" = HIGH 0V TO +0.8V=LOGIC "0" = LOW
7. C27* AND C32* ARE FACTORY-SELECTED COMPONENTS. THESE COMPONENTS MAY NOT BE INSTALLED. IF THESE COMPONENTS ARE INSTALLED, ACCEPTABLE VALUES RANGE FROM 1 pF TO 10 pF.
8. TEST CONDITIONS TO OBTAIN THESE WAVEFORMS ARE AS FOLLOWS:
   1. ROTATE A3A3R12 TO FULL CW POSITION.
   2. SHORT A3A6TP5 TO A3A6TP3
   3. SHORT A3A7TP4 TO A3A7TP6
   4. PUSH A3A7S1
9. LIFT R11 AND USE TEST CONDITIONS FROM NOTE 8.
10. LIFT R10 AND USE TEST CONDITIONS FROM NOTE 8.
11. R47* AND R48* ARE FACTORY-SELECTED COMPONENTS. ACCEPTABLE VALUES RANGE FROM 5KΩ TO 15KΩ.

A3A3

A3A3 LINE GENERATOR, SCHEMATIC DIAGRAM (2 OF 2)

A3A4

A3A4 Memory, Circuit Description

Memory Assembly A3A4 contains 4096 12-bit words of static random-access memory (RAM) and 2048 8-bit words of read-only memory (ROM), plus the necessary latches, buffers, and control logic for input and output operations. Data for display annotation (center frequency, reference level, and so on.), graticules, characters, and TRACE A and TRACE B is stored in memory.

Display Memory Ⓔ

Display memory contains two 2 k x 12 blocks. The lower block, made up of U4 and U5, corresponds to addresses 0000 through 2047 and is enabled by LCE1 from Control Logic. The upper block, U3 and U6, corresponds to addresses 2048 through 4095 and is enabled by LCE2. Four of the eight input/output lines of U5 and U6 are not used since only 12-bit data words are required. LOE enables the RAM outputs for read operations only. LWE writes data to the RAM.

The RAM address latches, U7 and U8, store the memory address during read and write operations. These latches are required because the memory address register is occasionally changed before a read operation is completed. When not enabled, these latches are transparent.

Memory Address Register Ⓐ

Registers U15 and U16 store the memory address for display memory and character stroke memory.

Memory Data Input Register Ⓒ

Registers U9 and U11 store input data to be written to the display memory for write operations only.

Buffers U10 and U12 pass data from Memory Data Input Register to display memory for write operations only.

Memory Data Output Buffer Ⓑ

Buffers U13 and U14 enable the output data from either display memory or character stroke memory to the Digital Storage Bus for read operations only.

Control Logic Ⓓ

Control Logic generates control signals for display memory and buffers in Memory Data Input Register. When control line CE (chip enable) is true, RAM address 11 (RA11) from U7 generates low chip enable 1 and 2 (LCE1, LCE2). This enables the lower or upper block of display memory during read and write operations.

During read operations, LOE (low output enable) is generated in U17D when CE is true and LWRITE (low write) is false. During write operations, U17C produces LWE (low write enable) when CE and LWRITE are true.

Inverters U18E and U18D produce LDINEN (low data input enable) when LWE is true. The two inverters delay the rising edge of LDINEN to hold the data lines after LWE goes false, at the end of a write operation.

Character Stroke Memory Ⓖ

ROM U2 is a 2048 word by 8-bit read-only memory that contains the relative X and Y axis coordinate information that forms displayed characters. Each 8-bit word contains three bits of X-axis information, four bits of Y-axis information, and one bit for blanking. The ROM is addressed from the memory address register and the stroke counter. The ROM outputs are enabled by LROMEN (low ROM enable).

Stroke Counter Ⓕ

The stroke counter drives the lower three address bits of character stroke memory. Since most characters contain less than eight line segments, the character information is stored in consecutive 8-word blocks in the ROM. The memory address register contains the address of the 8-word block while the stroke counter contains the address of the individual strokes. To read the information for all the line segments of a character, the memory address register is held constant while the stroke counter addresses up to eight strokes.

The STROK8 output goes high to signal the processor that the eighth stroke has been reached. LCLRSA clears the counter at the beginning of each character and INCRSA is used to increment the counter after each stroke.

Analyzer Repair Inc.

A3A4 Memory, Troubleshooting

Test Program 4 is used to write and read various patterns from the Display Memory Ⓔ and to read the Character Stroke Memory Ⓖ. An explanation of Test Program 4 is located in the "A3 Digital Storage Troubleshooting" tab. This test requires that the Digital Storage input bus be good (there are no shorted Digital Storage data lines). This could show up as incorrect inputs to the memory address registers U15 and U16.

Analyzer Repair Inc.

HP Part Number 85662-60125

A3A4 Memory

Reference Designatior	HP Part Number	C D	Qty	Description	Mfr Code	Mfr Part Number
A3A4	85662-60125			MEMORY BOARD ASSEMBLY	2848C	85662-60125
A3A4C1	0160-4835			CAPACITOR-FXD .1UF +-10% SOVDC CER	04222	SA115C104KAAH
A3A4C2	0160-4835			CAPACITOR-FXD .1UF +-lo% 50VDC CER	04222	SA115C104KAAH
A3A4C3	0160-4835			CAPACITOR-FXD .1UF +-10% 50VDC CER	04222	SA115C104KAAH
A3A4C4	0160-4835			CAPACITOR-FXD .1UF +-10% 50VDC CER	04222	SA115C104KAAH
A3A4C5	0160-4835			CAPACITOR-FXD .1UF +-10% 50VOC CER	04222	SA115C104KAAH
A3A4C6	0160-4835			CAPACITOR-FXD .1UF +-10% 50VDC CER	04222	SA115C104KAAH
A3A4C7	0160-4835			CAPACITOR-FXO .1UF +-10% SOVDC CER	04222	SA115C104KAAH
A3A4C8	0180-1746			CAPACITOR-FXD 15UF+-10% 20VDC TA	56289	150D156X9020B2-DYS
A3A4C9	0160-4835			CAPACITOR-FXD .1UF +-lo% 50VDC CER	04222	SA115C104KAAH
A3A4C10	0160-4835			CAPACITOR-FXD .1UF +-10% 50VDC CER	04222	SA115C104KAAH
A3A4C11	0160-4835			CAPACITOR-FXD .1UF +-10% 50VDC CER	04222	SA115C104KAAH
A3A4C12	0160-4835			CAPACITOR-FXD .1UF +-10% SOVDC CER	04222	SA115C104KAAH
A3A4C13	0160-4835			CAPACITOR-FXD .1UF +-10% SOVDC CER	04222	SA115C104KAAH
A3A4C14	0160-4835			CAPACITOR-FXD .1UF +-10% SOVDC CER	04222	SA115C104KAAH
A3A4C15	0160-4835			CAPACITOR-FXD .1UF +-10% SOVDC CER	04222	SA115C104KAAH
A3A4C16	0160-4835			CAPACITOR-FXD .1UF +-10% 50VDC CER	04222	SA115C104KAAH
A3A4C18	0160-4835			CAPACITOR-FXD .1UF +-10% 50VDC CER	04222	SA115C104KAAH
A3A4C19	0160-4835			CAPACITOR-FXD .1UF +-10% 50VDC CER	04222	SA115C104KAAH
A3A4C21	0160-4835			CAPACITOR-FXD .1UF +-10% SOVDC CER	04222	SA115C104KAAH
A3A4C22	0180-1746			CAPACITOR-FXD 15UF+-10% 20VDC TA	56289	150D156X9020B2-DYS
A3A4MP1	1480-0073	6	2	PIN-ROLL .062-IN-DIA .25-IN-LG BE-CU	72962	99-012-062-0250
A3A4MP2	4040-0752	9	2	EXTR-PC BD YEL POLYC .062-IN-BD-THKNS 1-		
A3A4MP3				YOT ASSIGNED		
A3A4U1	1820-1278			IC CNTR TTL LS BIN UP/DOWN SYNCHRO POS-E	01295	SN74LS191N
A3A4U2	85662-80051			CHARACTER ROM	28480	85662-80051
A3A4U3	1818-1611			IC CMOS 16384 (16K) STAT RAM 150-NS 3-s	34335	AM9128-15PC
A3A4U4	1818-1611			IC CMOS 16384 (16K) STAT RAM 150-NS 3-s	34335	AM9128-15PC
A3A4U5	1818-1611			IC CMOS 16384 (16K) STAT RAM 150-NS 3-S	34335	AM9128-15PC
A3A4U6	1818-1611			IC CMOS 16384 (16K) STAT RAM 150-NS 3-S	34335	AM9128-15PC
A3A4U7	1820-2102	8	1	IC LCH TTL LS D-TYPE OCTL	01295	SN74LS373N
A3A4U8	1820-2102	8	1	IC LCH TTL LS D-TYPE OCTL	01295	SN74LS373N
A3A4U9	1820-1196	8	1	IC FF TTL LS D-TYPE POS-EDGE-TRIG COM CL	01295	SN74LS174N
A3A4U10	1820-1492			IC BFR TTL LS INV HEX 1-INP	01295	SN74LS368AN
A3A4U11	1820-1196	8	1	IC FF TTL LS D-TYPE POS-EDGE-TRIG COM CL	01295	SN74LS174N
A3A4U12	1820-1492			IC BFR TTL LS INV HEX 1-INP	01295	SN74LS368AN
A3A4U13	1820-1492			:C BFR TTL LS INV HEX I-INP	01295	SN74LS368AN
A3A4U14	1820-1492			:C BFR TTL LS INV HEX I-INP	01295	SN74LS368AN
A3A4U15	1820-1196	8	1	IC FF TTL LS D-TYPE POS-EDGE-TRIG COM CL	01295	SN74LS174N
A3A4U16	1820-1196	8	1	IC FF TTL LS D-TYPE POS-EDGE-TRIG COM CL	01295	SN74LS174N
A3A4U17	1820-1197	9	1	IC GATE TTL LS NAND QUAD 2-INP	01295	SN74LSOON
A3A4U18	1820-1199			C INV TTL LS HEX 1-INP	01295	SN74LSO4N

**Indicates factory-selected value*

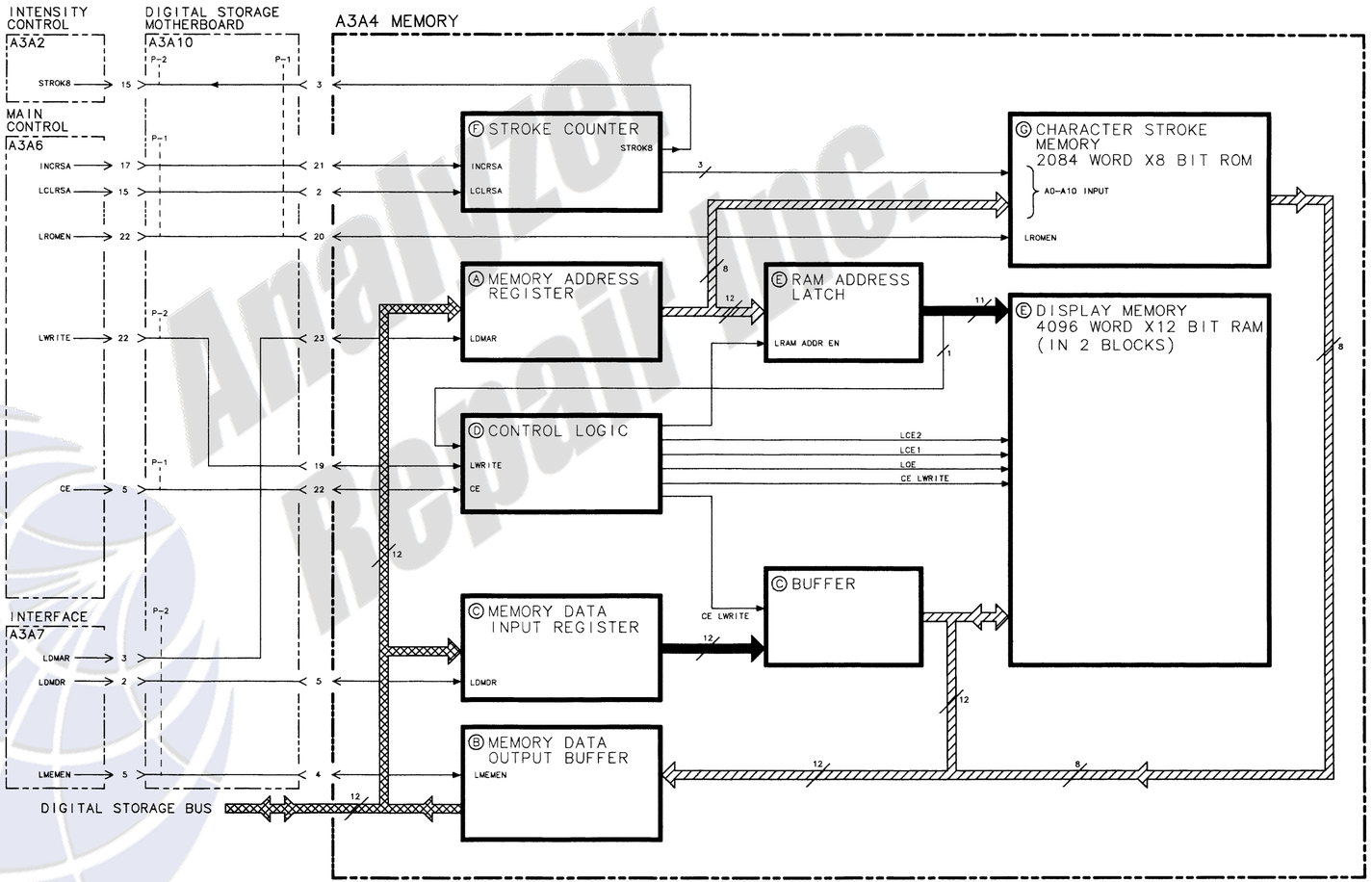

A3A4 MEMORY, BLOCK DIAGRAM

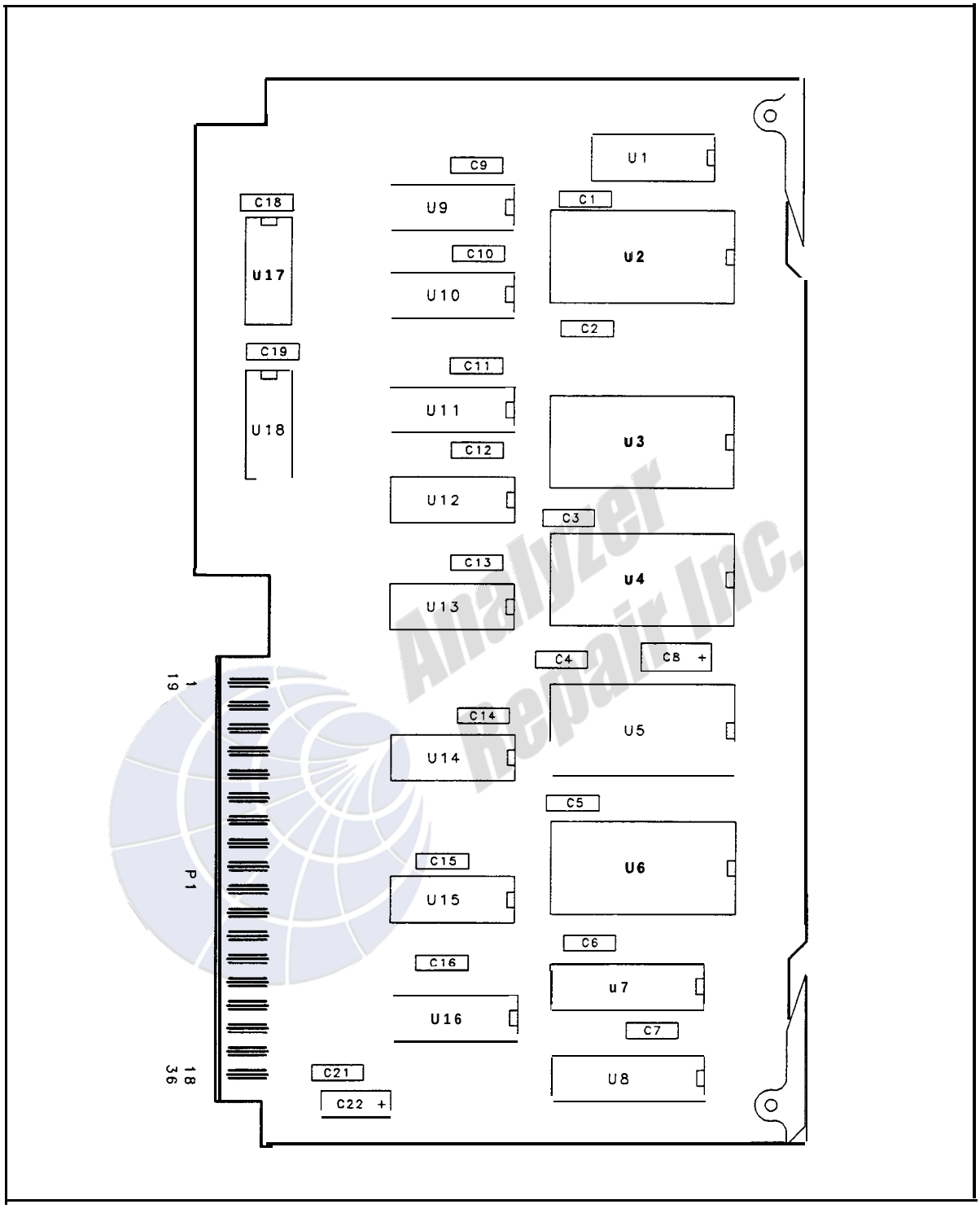

A3A4 Memory Component Locations, 85662-60125

A3A4 MEMORY
85662-60125
(SERIAL PREFIX: 2403A)

P1

PIN	SIGNAL	TO/FROM	FUNCTION BLOCK
1	NC		
19	LWRITE	A3A6P2-22	D
2	LCLRSA	A3A6P1-15	F
20	LROMEN	A3A6P1-22	G
3	STROKB	A3A2P2-15	F
21	INCRSA	A3A6P1-17	F
4	LMEMEN	A3A7P2-5	B
22	CE	A3A6P1-5	D
5	LDMDR	A3A7P2-2	C
23	LDMAR	A3A7P2-3	A
6	NC		
24	NC		
7	NC		
25	NC		
8	NC		
26	NC		
9	NC		
27	NC		
10	B0F		A
28	B1		A
11	B2		A
29	B3		A
12	B4	DIGITAL STORAGE BUS	A
30	B5		A
13	B6		A
31	B7		A
14	B8		A
32	B9		A
15	B10		A
33	B11		A
16	DGND		H
34	DGND		H
17	+5V		H
35	NC		
18	NC		
36	NC		

P1-10 B0F
P1-25 B1
P1-11 B2
P1-26 B3
P1-12 B4
P1-30 B5
P1-13 B6
P1-31 B7
P1-14 B8
P1-32 B9
P1-15 B10
P1-33 B11
DIGITAL STORAGE BUS

Ⓐ MEMORY ADDRESS REGISTER
P1-23 LDMAR
U16 REG: B0F MA1, B1 MA2, B2 MA3, B3 MA4, B4 MA5, B5 MA6
U15 REG: B6 MA7, B7 MA8, B8 MA9, B9 MA10, B10 MA11, B11 MA12

Ⓑ MEMORY DATA OUTPUT BUFFER
P1-4 LMEMEN
U13, U14 3-ST

Ⓒ MEMORY DATA INPUT REGISTER
P1-5 LDMDR
U9, U10, U11, U12 REG; BUFFER

Ⓓ CONTROL LOGIC
P1-22 CE
P1-19 LWRITE
U18B 4 L RAM ADDR EN
U17A LCE2
U18A
U17B LCE1
U17D LOE
U18C
U17C U18E U18D

Ⓔ DISPLAY MEMORY (4096 WORD X12-BIT)
U8, U7 LATCH
RAM ADDRESS LATCH
U4, U5, U3, U6 RAM

Ⓕ STROKE COUNTER
P1-21 INCRSA
P1-2 LCLRSA
U1 CTR
U18F
P1-3 STROKB

Ⓖ CHARACTER STROKE MEMORY (2048-WORD X8-BIT)
P1-20 LROMEN
U2

Ⓗ POWER SUPPLIES
P1-17 +5V
P1-18 DGND
P1-34 DGND
C22 15 µF, C21 0.1

NOTES:

1. REFERENCE DESIGNATORS WITHIN THIS ASSEMBLY ARE ABBREVIATED. FOR COMPLETE REFERENCE DESIGNATION, PREFIX ABBREVIATION WITH ASSEMBLY DESIGNATION.
2. UNLESS OTHERWISE INDICATED: RESISTANCE IS IN OHMS (Ω) CAPACITANCE IS IN MICROFARADS(µF) INDUCTANCE IS IN MICROHENRIES(µH)
3. MNEMONIC TABLE:

MNEMONIC	DESCRIPTION
LDMAR	LOAD MEMORY ADDRESS REG.
LMEMEN	LOW=MEMORY ENABLE
LWRITE	LOW=WRITE IN MEMORY
LDMDR	LOAD MEMORY DATA REG.
LCLRSA	LOW=CLEAR STROKE ADDRESS
INCRSA	INCREMENT STROKE ADDRESS
STROKB	EIGHT CHARACTER STROKE
LROMEN	LOW=ION ENABLE
DGND	DIGITAL GROUND
CE	CHIP ENABLE
LDIMEN	LOW=RAM DATA INPUT ENABLE (WRITE)
LRAMADDR EN	LOW=RAM ADDRESS ENABLE
LOE	LOW=RAM OUTPUT ENABLE (READ)
LWE	LOW=RAM WRITE ENABLE (WRITE)
LCE1	LOW=RAM CHIP ENABLE 2 (ADDR 0000-2047,U4 & U5)
LCE2	LOW=RAM CHIP ENABLE 2 (ADDR 2048-4095,U3 & U6)

4. UNLESS OTHERWISE INDICATED LOGIC LEVELS ARE TTL:
   ±2.0V TO +5.0V=LOGIC "1" =HIGH
   0V TO +0.8V=LOGIC "0" =LOW
5. UNLESS OTHERWISE INDICATED: SIGNALS ENTER AT LEFT SIDE AND EXIT AT RIGHT SIDE OF FUNCTION BLOCKS.

A3A4

A3A4 MEMORY, SCHEMATIC DIAGRAM

A3A5

A3A5 Data Manipulator, Circuit Description

A3A5 Data Manipulator contains 16 random-access memory (RAM) registers and 32 read-only memory (ROM) registers, an accumulator, and an arithmetic logic unit (ALU). This assembly provides all data functions and transfers for digital storage.

Register RAM Ⓑ

U13, U15, and U17 form the 16 12-bit RAM registers used for data storage during data manipulation.

Constant ROM Ⓕ

U1 and U18 form the 16 12-bit ROM registers used as constants for data storage during data manipulation.

Accumulator Ⓓ

U7 and U9 form the 12-bit Accumulator, which receives and holds all results of ALU operations.

Buffer Ⓒ

U5 and U11 are three-state data buffers that allow the Accumulator data to be transferred to the Source Bus.

Arithmetic Logic Unit (ALU) Ⓔ

U2, U3, and U4 are the main Arithmetic Logic Unit (ALU). U16 provides high-speed carry look-ahead. U14 decodes ALU outputs to determine whether a zero-value result has been generated.

Pipeline Register Ⓖ

U12 and U24 form an instruction Pipeline Register for data manipulation instructions.

Analyzer Repair Inc.

Control Decoder Ⓗ

U19 through U23 decode data manipulation instructions into the necessary control lines.

Multiplexer/Bus Driver Ⓐ

U6, U8, and U10 form a 12-bit Bus Driver with two data inputs. Data from the RAM Bus or from the Accumulator Bus may be transferred to the main Digital Storage Bus through these drivers.

A3A5 Data Manipulator, Troubleshooting

To verify proper operation of A3A5 Data Manipulator, first use Test Program 2, with the qualifier feedback disabled, to verify the qualifier select circuitry on A3A7. The next check uses Test Program 3 to check the Data Manipulator Bus output at the connector and the LZERO output at U14 pin 9. (Since Test Program 3 is the first program to use the qualifier and the normal interrupt, the INTR line from A3A2 to A3A6U16 pin 10 and the buffered qualifier A3A6U27 might have to be checked. The INTR line should be a 50 kHz signal.) On all previous checks, they have not been enabled, so that the Source bus was always the Constant ROM output. Test Program 5, though, enables U5 and U11 so they can be checked. This also checks that the Constant ROM outputs can be disabled.

Test Program 1 checks the Accumulator, Control Decode logic, Pipeline Registers, and parts of the ALU, Constant ROM, and the Multiplexer Bus Driver. The Register RAM outputs are disabled by A3A5TP2 being grounded; thus, they should be high. This eliminates the feedback from the data bus back into the A3A5 Data Manipulator.

Troubleshooting the Digital Storage Bus

If a Multiplexer Bus Driver on A3A5 has an incorrect output but all its inputs are good, the multiplexer may be defective or there may be another bad driver/load on that data bit. If replacing the multiplexer does not solve the problem, additional probing with a scope, current tracer, or ohmmeter may be required to further isolate the bad node.

Test Program 2 is the same as Test Program 1 except that the Register RAMs are enabled. This feedback path means that a low-order bit failure can make higher-order bits appear bad. Therefore, it is best to probe beginning with bit 0 and then working up. If a register RAM output appears incorrect, it may be due to either the RAM being defective, or the ALU input being faulty. Grounding A3A5TP2 disables the RAM outputs, and the ALU input is verified by manually grounding the RAM output.

HP Part Number 85662-60145

A3A5 Data Manipulator

Reference Designatior	HP Part Number	C D	Qty	Description	Mfr Code	Mfr Part Number
A3A5	85662-60145		1	BOARD ASSEMBLY, DATA MANIPULATOR	2848(	85662-60145
A3A5C1	0160-4835		1	CAPACITOR-FXD .1UF +-10% 50VDC CER	04222	SA115C104KAAH
A3A5C2	0160-4835		1	CAPACITOR-FXD .1UF +-10% SOVDC CER	04222	SA115C104KAAH
A3A5C3	0160-4835		1	CAPACITOR-FXD .1UF +-10% 50VDC CER	04222	SA115C104KAAH
A3A5C4	0160-4835		1	CAPACITOR-FXD .1UF +-10% 50VDC CER	04222	SA115C104KAAH
A3A5C5	0160-4835		1	CAPACITOR-FXD .1UF +-10% 50VDC CER	04222	SA115C104KAAH
A3A5C6	0160-4835		1	CAPACITOR-FXD .1UF +-10% SOVDC CER	04222	SA115C104KAAH
A3A5C7	0160-4835		1	CAPACITOR-FXD .1UF +-10% SOVDC CER	04222	SA115C104KAAH
A3A5C8	0160-4835		1	CAPACITOR-FXD .1UF +-10% SOVDC CER	04222	SA115C104KAAH
A3A5C9	0160-4835		1	CAPACITOR-FXD .1UF +-10% 50VDC CER	04222	SA115C104KAAH
A3A5C10	0160-4835		1	CAPACITOR-FXD .1UF +-10% 50VDC CER	04222	SA115C104KAAH
A3A5C11	0160-4835		1	CAPACITOR-FXD .1UF +-10% 50VOC CER	04222	SA115C104KAAH
A3A5C12	0160-4835		1	CAPACITOR-FXD .1UF +-10% SOVDC CER	04222	SA115C104KAAH
A3A5C13	0160-4835		1	CAPACITOR-FXD .1UF +-10% 50VDC CER	04222	SA115C104KAAH
A3A5C14	0160-4835		1	CAPACITOR-FXD .1UF +-10% 50VDC CER	04222	SA115C104KAAH
A3A5C15	0160-4835		1	CAPACITOR-FXD .1UF +-10% 50VDC CER	04222	SA115C104KAAH
A3A5C16	0160-4835		1	CAPACITOR-FXD .1UF +-10% 50VDC CER	04222	SA115C104KAAH
A3A5C17	0160-4835		1	CAPACITOR-FXD .1UF +-10% SOVDC CER	04222	SA115C104KAAH
A3A5C18	0160-4835		1	CAPACITOR-FXD .1UF +-10% 50VDC CER	04222	SA115C104KAAH
A3A5C19	0160-4835		1	CAPACITOR-FXD .1UF +-10% SOVDC CER	04222	SA115C104KAAH
A3A5C20	0160-4835		1	CAPACITOR-FXD .1UF +-10% 50VDC CER	04222	SA115C104KAAH
A3A5C21	0160-4835		1	CAPACITOR-FXD .1UF +-10% 50VDC CER	04222	SA115C104KAAH
A3A5C22	0160-4835		1	CAPACITOR-FXD .1UF +-10% 50VDC CER	04222	SA115C104KAAH
A3A5C23	0160-4835		1	CAPACITOR-FXD .1UF +-10% 50VDC CER	04222	SA115C104KAAH
A3A5C24	0160-4835		1	CAPACITOR-FXD .1UF +-10% 50VDC CER	04222	SA115C104KAAH
A3A5C25	0160-4835		1	CAPACITOR-FXD .1UF +-10% SOVDC CER	04222	SA115C104KAAH
A3A5C26	0180-0228		1	CAPACITOR-FXD 22UF+-10% 15VDC TA	56289	150D226X9015B2-DYS
A3A5C27	0180-0228		1	CAPACITOR-FXD 22UF+-10% 15VDC TA	56289	150D226X9015B2-DYS
A3A5C28	0160-4832		1	CAPACITOR-FXD .01UF +-10% 100VDC CER	04222	SA101C103KAAH
A3A5C29	0160-4832		1	CAPACITOR-FXD .01UF +-10% 100VDC CER	04222	SA101C103KAAH
A3A5C30	0160-4832		1	CAPACITOR-FXD .01UF +-10% 100VDC CER	04222	SA101C103KAAH
A3A5L1	08558-80011		1	FILTER COIL BLUE	2848C	08558-80011
A3A5MP1	1480-0073		2	PIN-ROLL .062-IN-DIA .25-IN-LG BE-CU	72962	99-012-062-0250
A3A5MP2	4040-0753		2	EXTR-PC BD GRN POLYC .062-IN-BD-THKNS 1-		
A3A5R1	0698-3155		1	RESISTOR 4.64K 1% .125W TF TC=0+-100	19701	SFR25H
A3A5R2	0698-3155		1	RESISTOR 4.64K 1% .125W TF TC=0+-100	19701	SFR25H
A3A5R3	0698-3155		1	RESISTOR 4.641: 1% .125W TF TC=0+-100	19701	SFR25H
A3A5R4	0698-3155		1	RESISTOR 4.641: 1% .125W TF TC=0+-100	19701	SFR25H
A3A5R5	0698-3155		1	RESISTOR 4.641: 1% .125W TF TC=0+-100	19701	SFR25H
A3A5R6	0698-3155		1	RESISTOR 4.641: 1% .125W TF TC=0+-100	19701	SFR25H
A3A5R7	1698-3155		1	ZESISTOR 4.641: 1% .125W TF TC=0+-100	19701	SFR25H
A3A5R8	1698-3155		1	ZESISTOR 4.641: 1% .125W TF TC=0+-100	19701	SFR25H
A3A5R9	1698-3155		1	ZESISTOR 4.641: 1% .125W TF TC=0+-100	19701	SFR25H
A3A5R10	1698-3155		1	RESISTOR 4.641: 1% .125W TF TC=0+-100	19701	SFR25H
A3A5R11	)698-3155		1	RESISTOR 4.641: 1% .125W TF TC=0+-100	19701	SFR25H
A3A5R12	1698-3155		1	RESISTOR 4.641: 1% .125W TF TC=0+-100	19701	SFR25H
A3A5R13	)698-3155		1	RESISTOR 4.64K 1% .125W TF TC=0+-100	19701	SFR25H

**Indicates factory-selected value*

HP Part Number 85662-60145

A3A5 Data Manipulator

Reference Designation	HP Part Number	C D	Qty	Description	Mfr Code	Mfr Part Number
A3A5R14	0698-3155		1	RESISTOR 4.64K 1% .125W TF TC=0+-100	19701	SFR25H
A3A5R15	0698-3132	4	1	RESISTOR 261 1% .125W TF TC=0+-100	19701	SFR25H
A3A5R16	0698-3132	4	1	RESISTOR 261 1% .125W TF TC=0+-100	19701	SFR25H
A3A5R17	0698-3155	1	1	RESISTOR 4.641: 1% .125W TF TC=0+-100	19701	SFR25H
A3A5TP1	0360-0535	C	1	TERMINAL-TEST POINT .330IN ABOVE	46819	
A3A5TP2	0360-0535	C	1	TERMINAL-TEST POINT .330IN ABOVE	46819	
A3A5TP3	0360-0535	C	1	TERMINAL-TEST POINT .330IN ABOVE	46819	
A3A5TP4	0360-0535	C	1	TERMINAL-TEST POINT .330IN ABOVE	46819	
A3A5U1	35662-80015	9	1	IC ROM 512X8	28480	85662-80015
A3A5U2	1820-1974	C	1	IC ARITH-LGC-UN TTL S	28480	1820-1974
A3A5U3	1820-1974	C	1	IC ARITH-LGC-UN TTL S	28480	1820-1974
A3A5U4	1820-1974	C	1	IC ARITH-LGC-UN TTL S	28480	1820-1974
A3A5U5	1820-1491	6	1	IC BFR TTL LS NON-INV HEX 1-INP	01295	SN74LS367AN
A3A5U6	1820-1439	2	1	IC MUXR/DATA-SEL TTL LS Z-TO-1-LINE Z-IN	01295	SN74LS258BN
A3A5U7	1820-1196	8	1	IC FF TTL LS D-TYPE POS-EDGE-TRIG COM CL	01295	SN74LS174N
A3A5U8	1820-1439	2	1	IC MUXR/DATA-SEL TTL LS Z-TO-1-LINE 2-IN	01295	SN74LS258BN
A3A5U9	1820-1196	8	1	IC FF TTL LS D-TYPE PDS-EDGE-TRIG COM CL	01295	SN74LS174N
A3A5U10	1820-1439	2	1	IC MUXR/DATA-SEL TTL LS Z-TO-1-LINE 2-IN	01295	SN74LS258BN
A3A5U11	1820-1491	6	1	IC BFR TTL LS NON-INV HEX 1-INP	01295	SN74LS367AN
A3A5U12	1820-1076	3	1	IC FF TTL S D-TYPE POS-EDGE-TRIG CLEAR H	01295	SN74S174N
A3A5U13	1816-0724	7	1	IC TTL S 64-BIT STAT RAM 35-NS 3-S	34335	SN74S189N
A3A5U14	1820-1130	C	1	IC GATE TTL S NAND 13-INP	01295	SN74S133N
A3A5U15	1816-0724	7	1	IC TTL S 64-BIT STAT RAM 35-NS 3-S	34335	SN74S189N
A3A5U16	1820-1305	1	1	IC GEN TTL S LOOK-AHD-CRY	01295	SN74S182N
A3A5U17	1816-0724	7	1	IC TTL S 64-BIT STAT RAM 35-NS 3-S	34335	SN74S189N
A3A5U18	35662-80016	C	1	IC ROM 512X8	28480	85662-80016
A3A5U19	1820-0681	4	1	IC GATE TTL S NAND QUAD 2-INP	01295	SN74S00N
A3A5U20	1820-0685	8	1	IC GATE TTL S NAND TPL 3-INP	01295	SN74S10N
A3A5U21	1820-1202	7	1	IC GATE TTL LS NAND TPL 3-INP	01295	SN74LS10N
A3A5U22	1820-1197	9	1	IC GATE TTL LS NAND QUAD 2-INP	01295	SN74LS00N
A3A5U23	1820-1287	8	1	IC BFR TTL LS NAND QUAD 2-INP	01295	SN74LS37N
A3A5U24	1820-1195	7	1	IC FF TTL LS D-TYPE POS-EDGE-TRIG COM CL	01295	SN74LS175N

**Indicates factory-selected value*

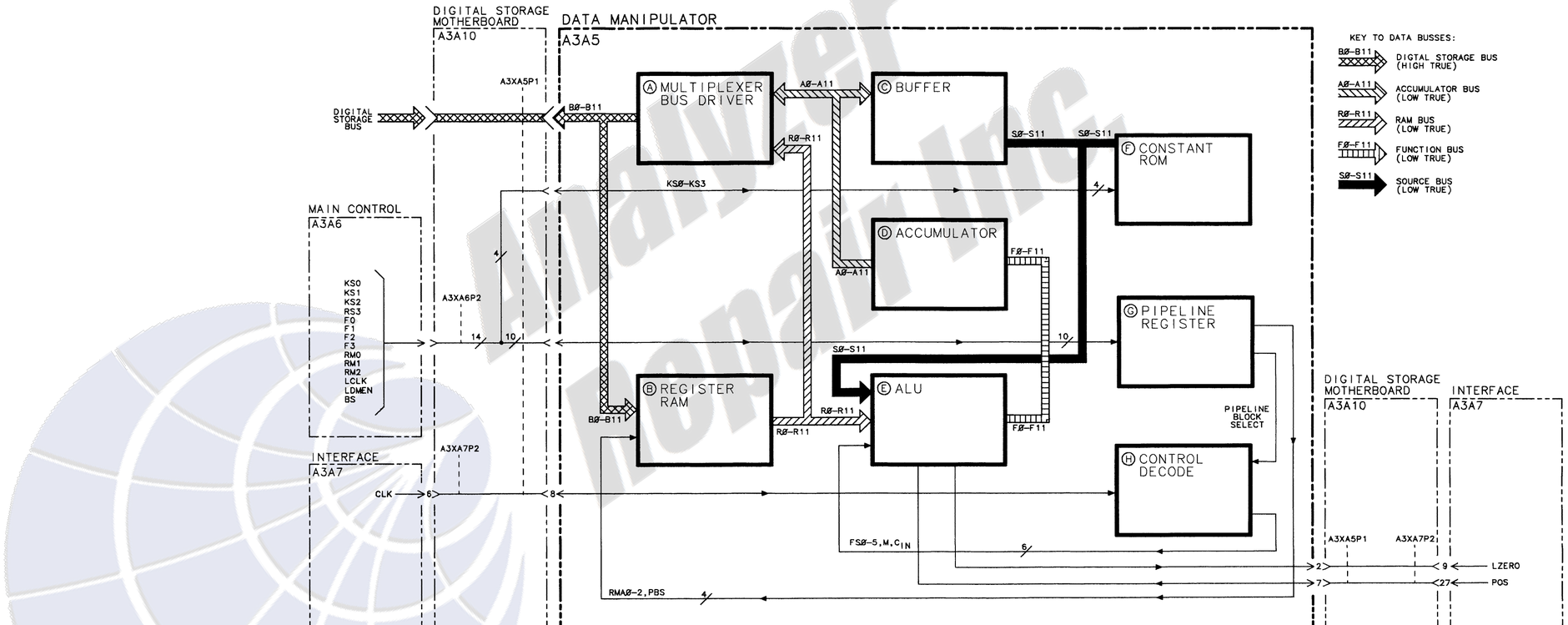

A3A5 DATA MANIPULATOR, BLOCK DIAGRAM

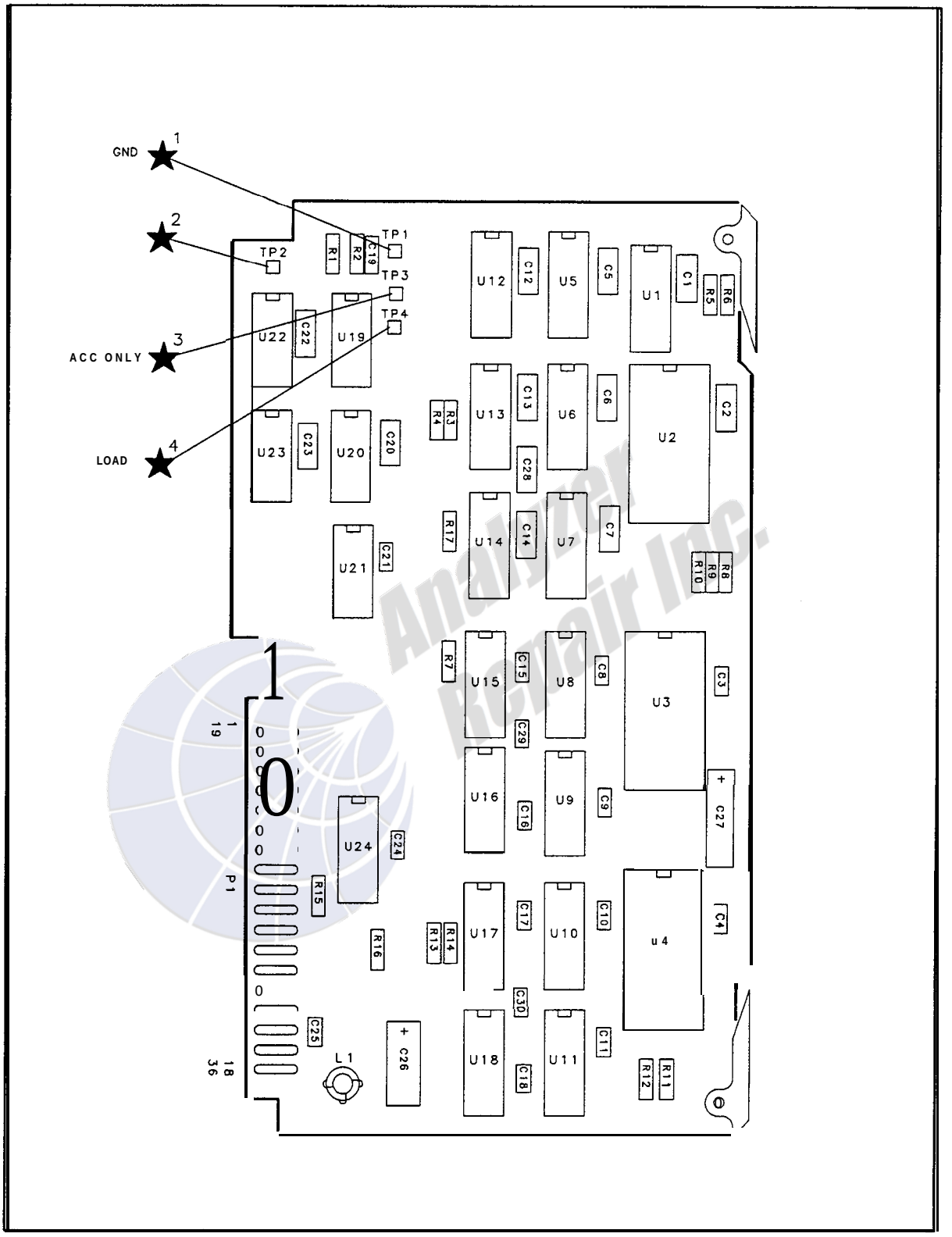

A3A5 Data Manipulator Component Locations, 85662-60145

A3A5 DATA MANIPULATOR
85662-60145
(SERIAL PREFIX: 2403A)

P1

PIN	SIGNAL	TO/FROM	FUNCTION BLOCK
1	KS#	A3A6P2-2	F
19	KS1	A3A6P2-1	F
2	KS2	A3A6P2-4	F
20	KS3	A3A6P2-3	F
3	BS	A3A6P2-21	G
21	RM2	A3A6P2-5	G
4	RM1	A3A6P2-20	G
22	LCLK	A3A7P2-24	G
5	RM#	A3A6P2-26	G
23	F3	A3A6P2-6	G
6	F#	A3A7P2-27	G
24	F1	A3A6P2-7	G
7	POS	A3A7P2-27	E
25	F2	A3A6P2-8	G
8	CLK	A3A7P2-19	H
26	LZERO	A3A7P2-9	E
9	NC		
27	LOMEN	A3A6P2-9	G
10	B# B1		A A
11	B2 B3		A A
12	B4 B5		A A
13 31	B6 B7	DIGITAL STORAGE BUS	A A
14 32	B8 B9		A A
15 33	B11# B11		A A
16 34	GND1 GND		I I
17 35	+5V GND		I I
18 36	+5V NC		I

Ⓐ MULTIPLEXER BUS DRIVER

Ⓑ REGISTER RAM

Ⓒ BUFFER

Ⓓ ACCUMULATOR

Ⓔ ALU

Ⓕ CONSTANT ROM

Ⓖ PIPELINE REGISTER

Ⓘ POWER SUPPLIES

CONTROL DECODE

NOTES:

1. REFERENCE DESIGNATORS WITHIN THIS ASSEMBLY ARE ABBREVIATED. FOR COMPLETE REFERENCE DESIGNATION, PREFIX ABBREVIATION WITH ASSEMBLY DESIGNATION.
2. UNLESS OTHERWISE INDICATED: RESISTANCE IS IN OHMS (Ω) CAPACITANCE IS IN MICROFARADS (μF) INDUCTANCE IS IN MICROHENRIES (μH)
3. MNEMONIC TABLE:

MNEMONIC	DESCRIPTION
KS#–KS3	CONSTANT SELECTION BITS #–3
BS	BLOCK SWITCH CONTROL
RM#–RM2	RAM REGISTER SELECT 0 THROUGH 2
LCLK	INVERTED CLOCK
F#–F11	FUNCTION BITS # THROUGH 11
POS	SIGN OF ALU RESULTS
LZERO	OUTPUT OF ZERO CHECK ON ALU RESULTS (LOW=TRUE)
LOMEN	DATA MANIPULATOR OUTPUT ENABLE (LOW=TRUE)
CLK	8MHz SYSTEM CLOCK
B#–B11	DIGITAL STORAGE BUS DATA BITS # THROUGH 11
DMS	

4. CONTROL DECODE

FUNCTION	INPUTS: F CODE F3 F2 F1 F0	INPUTS: FUNCTION SELECT FS3 FS2 FS1 FS0	C IN	OUTPUTS: L WRITE RAM	OUTPUTS: LOAD	OUTPUTS: ONE
A+B= ACC	0 0 0 0	0 0 0 0	1	0	1	0
A+B= ACC	0 0 0 1	0 0 0 1	0	0	1	0
A+B= ACC	0 0 0 1	0 0 0 1	1	0	1	0
A+B= ACC	0 0 1 0	0 0 1 0	X	0	1	0
A= ACC	1 0 1 X	1 1 1 1	X	0	1	0
BUS= A	1 1 0 1	X X X X	X	1	0	1
L= ACC	1 1 0 1	0 0 0 0	X	0	0	1
ACC= BUS	1 1 1 X	X X X X	X	0	0	1

5. UNLESS OTHERWISE INDICATED: LOGIC LEVELS ARE TTL: +2.0V TO +5.0V=LOGIC "1", HIGH 0V TO +0.5V=LOGIC "0", LOW
6. UNLESS OTHERWISE INDICATED: SIGNALS ENTER AT LEFT SIDE OR TOP AND EXIT AT RIGHT SIDE OR BOTTOM OF FUNCTION BLOCKS.

A3A5

A3A5 DATA MANIPULATOR, SCHEMATIC DIAGRAM

A3A6

A3A6 Main Control, Circuit Description

The Digital Storage Processor is controlled by an algorithmic state machine, which uses relative-state addressing and interrupt linkage in performing the control algorithm. The Digital Storage Processor includes A3A4 Memory, A3A5 Data Manipulator, A3A6 Main Control, and A3A7 Interface.

State Register Ⓓ

The State Register, U13 and U14, contains the present state of the algorithm. The present state data is supplied to the Program ROM (Read-Only Memory), where it is decoded into control functions.

Branch Length Adder Ⓐ

The Branch Length Adder, U1 and U2, receives branch length data from the Program ROM and adds it to the present state data to generate the next state.

Link Register Ⓒ

The Link Register, U12 and U15, holds the suspended state of the main program during interrupts and holds the next interrupt state during the main program.

In effect the Link Register acts as a "bookmark" for both the main program and the interrupt program, so that either program can resume at the correct state.

State Machine Control Ⓕ

The State Machine Control, U16, U17, U18, U27C, and U27D, manages switching between the main and interrupt programs. In addition, it generates a signal to increment the Branch Length Adder for conditional branching.

Program ROM Ⓑ

The Program ROM, U4, U6, U8, and U10, contains both the main program and the interrupt program. U5, U7, U9, and U11 are test firmware used to generate diagnostic tests.

Analyzer Repair Inc.

Pipeline Registers Ⓔ Ⓚ

The Pipeline Registers, U24 and U28, hold instructions from the Program ROM for 125 ns during execution.

Addressable Flip-Flops Ⓛ

U21 and U23 contain 16 flip-flops that may be individually set and cleared. These flip-flops control signals for the Input Section and CRT Driver Section of A3 Digital Storage. The Input Section includes A3A8 Analog-Digital Converter and A3A9 Track and Hold. The CRT Driver Section includes A3A1 Trigger, A3A2 Intensity Control, and A3A3 Line Generator. The flip-flops also control flags and memory control lines for the Processor Section, which includes A3A4 Memory, A3A5 Data Manipulator, A3A6 Main Control, and A3A7 Interface. U19, U27A, and U27B decode instructions from Pipeline Register U28 to control the 16 flip flops. U29 contains buffers to output flag and timer signals onto the Digital Storage Bus.

Control Pulses Ⓒ

U26 decodes eight control pulses based on the instruction in the Pipeline Register U24. U25A is a flip-flop that is set and cleared by the signals decoded by U26. U26 controls the reset of peak detectors in the Input Section of A3 Digital Storage.

Dual Timer Ⓗ

U20 provides two timing pulses. One, about 20 ms, controls the CRT refresh rate. The other, about 20 μs, is used in the digital peak detection algorithm.

RAM Chip Enable Generator Ⓙ

U22 generates chip enable timing for A3A4 Memory. It delays execution of program instructions 1-1/2 states (182.5 ns) to allow addresses to settle.

Analyzer Repair Inc.

The INTR and LQ inputs, such as U16 pin 10, are checked simply for activity.

The Free Run check is done with A3A6TP8 grounded. This forces U27 pin 11 high and U18 pin 6 low. To verify these components and the U1 adder input, this ground is removed.

The Free Run check setup is used to verify the System ROM.

After A3A5 and A3A7 have been checked, the LTSTA and LTSTB lines are verified by using Test Program 4.

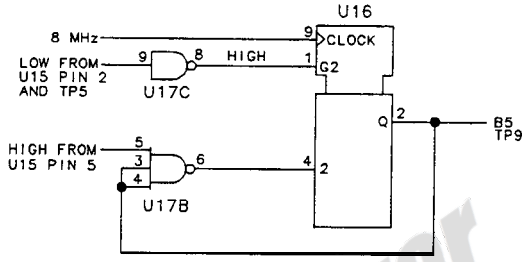

Figure 1. Equivalent Circuit of State Machine Control

Verify the turn-on states of the register and adder outputs.

When A3A7S1 is pressed:

LTON Pl-13 goes low
u12, u15 outputs go low
u13, u14 outputs go low
U1, U2 outputs go high

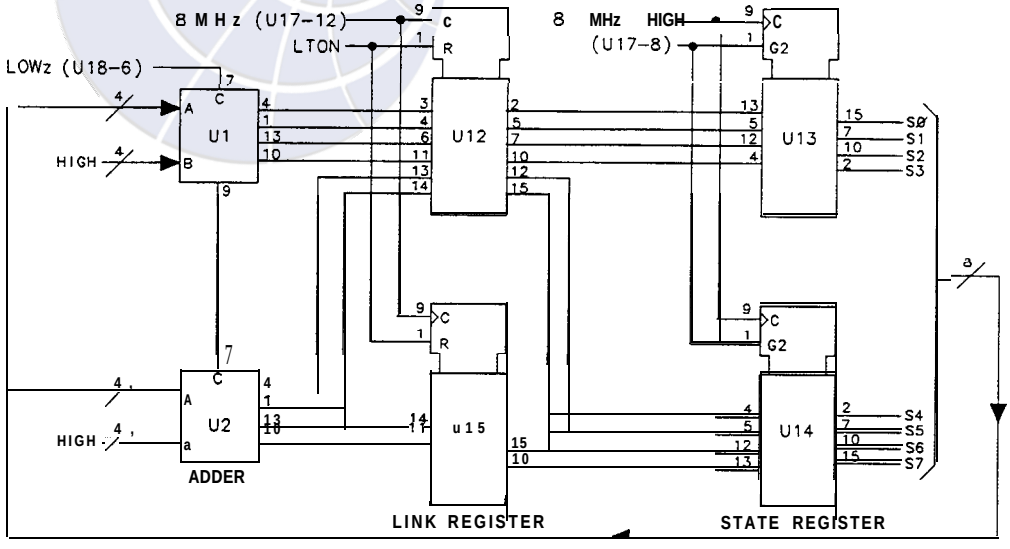

Figure 2. Equivalent Circuit of State Rigister, Adder, and Link Register

Verify binary count sequence, starting at the least significant bit SO (500 ns square wave) to S7 (64 μs square wave).

Analyzer Repair Inc.

HP Part Number 85662-60146

A3A6 Main Control

Reference Designatior	HP Part Number	C D	Qty	Description	Mfr Code	Mfr Part Number
A3A6	85662-60146		1	BOARD ASSEMBLY, MAIN CONTROL	28480	85662-60146
A3A6C1	0160-4835		1	CAPACITOR-FXO .1UF +-10% 50VDC CER	04222	SA115C104KAAH
A3A6C2	0160-4835		1	CAPACITOR-FXD .1UF +-10% 50VDC CER	04222	SA115C104KAAH
A3A6C3	0160-4835		1	CAPACITOR-FXD .1UF +-10% SOVDC CER	04222	SA115C104KAAH
A3A6C4	0160-4835		1	CAPACITOR-FXD .1UF +-10% 5DVOC CER	04222	SA115C104KAAH
A3A6C5	0160-4835		1	CAPACITOR-FXD .1UF +-10% 50VDC CER	04222	SA115C104KAAH
A3A6C6	0160-4835	7	1	CAPACITOR-FXD .1UF +-10% SOVDC CER	04222	SA115C104KAAH
A3A6C7	0160-4835	7	1	CAPACITOR-FXD .1UF +-10% 50VDC CER	04224	SA115C104KAAH
A3A6C8	0160-4835	7	1	CAPACITOR-FXD .1UF +-10% 50VDC CER	04222	SA115C104KAAH
A3A6C9	0160-4835	7	1	CAPACITOR-FXD .1UF +-10% 50VDC CER	04222	SA115C104KAAH
A3A6C10	0160-4835	7	1	CAPACITOR-FXD .1UF +-10% SOVDC CER	04222	SA115C104KAAH
A3A6C11	0160-4835	7	1	CAPACITOR-FXD .1UF +-10% 50VDC CER	04222	SA115C104KAAH
A3A6C12	0160-4832	4	1	CAPACITOR-FXD .01UF +-10% 100VDC CER	04222	SA101C103KAAH
A3A6C13	0180-0197	8	1	CAPACITOR-FXD 2.2UF+-10% 20VDC TA	56289	150D225X9020A2-DYS
A3A6C14	0180-0228	6	1	CAPACITOR-FXD 22UF+-10% 15VDC TA	56289	150D226X9015B2-DYS
A3A6C15	0160-4835	7	1	CAPACITOR-FXD .1UF +-10% 50VDC CER	04222	SA115C104KAAH
A3A6C16	0160-4835	7	1	CAPACITOR-FXD .1UF +-10% SOVDC CER	04222	SA115C104KAAH
A3A6C17	0160-4835	7	1	CAPACITOR-FXD .1UF +-10% SOVDC CER	04222	SA115C104KAAH
A3A6C18	0160-4835	7	1	CAPACITOR-FXD .1UF +-10% 50VDC CER	04222	SA115C104KAAH
A3A6C19	0160-4835	7	1	CAPACITOR-FXD .1UF +-10% SOVDC CER	04222	SA115C104KAAH
A3A6C20	0160-4835	7	1	CAPACITOR-FXD .1UF +-10% 50VDC CER	04222	SA115C104KAAH
A3A6C21	0160-4835	7	1	CAPACITOR-FXD .1UF +-10% SOVDC CER	04222	SA115C104KAAH
A3A6C22	3160-4835	7	1	CAPACITOR-FXD .1UF +-10% 50VDC CER	04222	SA115C104KAAH
A3A6C23	0160-4835	7	1	CAPACITOR-FXD .1UF +-10% 50VDC CER	04222	SA115C104KAAH
A3A6C24	3160-4835	7	1	CAPACITOR-FXD .1UF +-10% 50VDC CER	04222	SA115C104KAAH
A3A6C25	3160-4835	7	1	CAPACITOR-FXD .1UF +-10% SOVDC CER	04222	SA115C104KAAH
A3A6C26	0160-4835	7	1	CAPACITOR-FXD .1UF +-10% 50VOC CER	04222	SA115C104KAAH
A3A6C27	0160-4835	7	1	CAPACITOR-FXD .1UF +-10% SOVDC CER	04222	SA115C104KAAH
A3A6C28	0160-4835	7	1	CAPACITOR-FXD .1UF +-10% 50VDC CER	04222	SA115C104KAAH
A3A6C29	1160-4835	7	1	CAPACITOR-FXD .1UF +-10% 50VDC CER	04222	SA115C104KAAH
A3A6C30	0160-4835	7	1	CAPACITOR-FXD .1UF +-10% SOVDC CER	04222	SA115C104KAAH
A3A6C31	0160-4835	7	1	CAPACITOR-FXD .1UF +-10% SOVDC CER	04222	SA115C104KAAH
A3A6E1	1251-4787		1	SHUNT-DIP 8 POSITION DUAL INLINE PKG	D0779	435704-B
A3A6J1	1200-1205	5	1	SOCKET-IC 16-CONT DIP DIP-SLDR	00779	2-641610-2
A3A6L1	08558-80011	5	1	'ILTER COIL BLUE	28480	08558-80011
A3A6MP1	.480-0073	5	2	'IN-ROLL .062-IN-DIA .25-IN-LG BE-CU	72962	99-012-062-0250
A3A6MP2	0040-0754		2	:XTR-PC BD BLU POLYC .062-IN-BD-THKNS 1-		
A3A6R1	1698-3155		1	LESISTOR 4.641: 1% .125W TF TC=0+-100	19701	SFR25H
A3A6R2	0698-3155		1	LESISTOR 4.64K 1% .125W TF TC=0+-100	19701	SFR25H
A3A6R3	1698-3155		1	LESISTOR 4.641: 1% .125W TF TC=0+-100	19701	SFR25H
A3A6R4	0698-3157		1	RESISTOR 19.6K 1% .125W TF TC=0+-100	19701	SFR25H
A3A6R5	0698-6320		1	RESISTOR 5K +-0.1% .125W TF TC=0+-25	91637	CMF-55-1, T-9
A3A6R6	3757-0401		1	RESISTOR 100 +-1% .125W TF TC=0+-100	19701	SFR25H
A3A6TP1	0360-0535		1	TERMINAL-TEST POINT .330IN ABOVE	46819	
A3A6TP2	0360-0535		1	TERMINAL-TEST POINT .330IN ABOVE	46819	
A3A6TP3	3360-0535		1	TERMINAL-TEST POINT .330IN ABOVE	4G819	
A3A6TP4	3360-0535		1	TERMINAL-TEST POINT .330IN ABOVE	46819	

**Indicates factory-selected value*

HP Part Number 85662-60146

A3A6 Main Control

Reference Designation	HP Part Number	C D	Qty	Description	Mfr Code	Mfr Part Number
A3A6TP5	0360-0535	C	1	TERMINAL-TEST POINT .330IN ABOVE	4G819	
A3A6TP6	0360-0535	C	1	TERMINAL-TEST POINT .330IN ABOVE	46819	
A3A6TP7	0360-0535	C	1	TERMINAL-TEST POINT .330IN ABOVE	46819	
A3A6TP8	0360-0535	C	1	TERMINAL-TEST POINT .330IN ABOVE	46819	
A3A6TP9	0360-0535	C	1	TERMINAL-TEST POINT .330IN ABOVE	46819	
A3A6TP10	0360-0535	C	1	TERMINAL-TEST POINT .330IN ABOVE	46819	
A3A6TP11	0360-0535	C	1	TERMINAL-TEST POINT .330IN ABOVE	46819	
A3A6U1	1820-1871	6	1	IC ADDR TTL S BIN FULL ADDR 4-BIT	01295	SN74S283N
A3A6U2	1820-1871	6	1	IC ADDR TTL S BIN FULL ADDR 4-BIT	01295	SN74S283N
A3A6U3	1810-0205	7	1	NETWORK-RES 8-SIP 4.7K OHM X 7	11236	750-81
A3A6U4	1816-1604	4	1	IC TTL S 4096 (4K) ROM 55-NS 3-S	34335	AM27S29PC
A3A6U5	1816-1600	a	1	IC TTL S 4096 (4K) ROM 55-NS 3-S	34335	AM27S29PC
A3A6U6	1816-1605	5	1	IC TTL S 4096 (4K) ROM 55-NS 3-S	34335	AM27S29PC
A3A6U7	1816-1606	6	1	IC TTL S 4096 (4K) ROM 55-NS 3-S	34335	AM27S29PC
A3A6U8	1816-1601	1	1	IC TTL S 4096 (4K) ROM 55-NS 3-S	34335	AM27S29PC
A3A6U9	1816-1602	2	1	IC TTL S 4096 (4K) ROM 55-NS 3-S	34335	AM27S29PC
A3A6U10	1816-1607	7	1	IC TTL S 4096 (4K) ROM 55-NS 3-S	34335	AM27S29PC
A3A6U11	1816-1603	3	1	IC TTL S 4096 (4K) ROM 55-NS 3-S	34335	AM27S29PC
A3A6U12	1820-1076	3	1	IC FF TTL S D-TYPE POS-EDGE-TRIG CLEAR H	01295	SN74S174N
A3A6U13	1820-1981	9	1	IC RGTR TTL S QUAD 2-INP	34335	AM25S09PC
A3A6U14	1820-1981	9	1	IC RGTR TTL S QUAD 2-INP	34335	AM25S09PC
A3A6U15	1820-1076	3	1	IC FF TTL S D-TYPE POS-EDGE-TRIG CLEAR H	01295	SN74S174N
A3A6U16	1820-1981	9	1	IC RGTR TTL S QUAD 2-INP	34335	AM25S09PC
A3A6U17	1820-0685	8	1	IC GATE TTL S NAND TPL 3-INP	01295	SN74S10N
A3A6U18	1820-0681	4	1	IC GATE TTL S NAND QUAD 2-INP	01295	SN74S00N
A3A6U19	1820-0685	8	1	IC GATE TTL S NAND TPL 3-INP	01295	SN74S10N
A3A6U20	1820-1423	4	1	IC MV TTL LS MONOSTBL RETRIG DUAL	01295	SN74LS123N
A3A6U21	1820-1729	3	1	IC LCH TTL LS COM CLEAR 8-BIT	04713	SN74LS259N
A3A6U22	1820-0693	8	1	IC FF TTL S D-TYPE POS-EDGE-TRIG PRESET/	01295	SN74S74N
A3A6U23	1820-1729	3	1	IC LCH TTL LS CDM CLEAR 8-BIT	04713	SN74LS259N
A3A6U24	1820-1196	B	1	IC FF TTL LS D-TYPE PDS-EDGE-TRIG CDM CL	01295	SN74LS174N
A3A6U25	1820-1112	B	1	IC FF TTL LS D-TYPE PDS-EDGE-TRIG PRESET	01295	SN74LS74AN
A3A6U26	1820-1216	3	1	IC DCDR TTL LS 3-TO-8-LINE 3-INP	01295	SN74LS138N
A3A6U27	1820-0681	4	1	IC GATE TTL S NAND QUAD 2-INP	01295	SN74S00N
A3A6U28	1820-1076	3	1	IC FF TTL S D-TYPE PDS-EDGE-TRIG CLEAR H	01295	SN74S174N
A3A6U29	1820-1491	6	1	IC BFR TTL LS NON-INV HEX 1-INP	01295	SN74LS367AN

**Indicates factory-selected value*

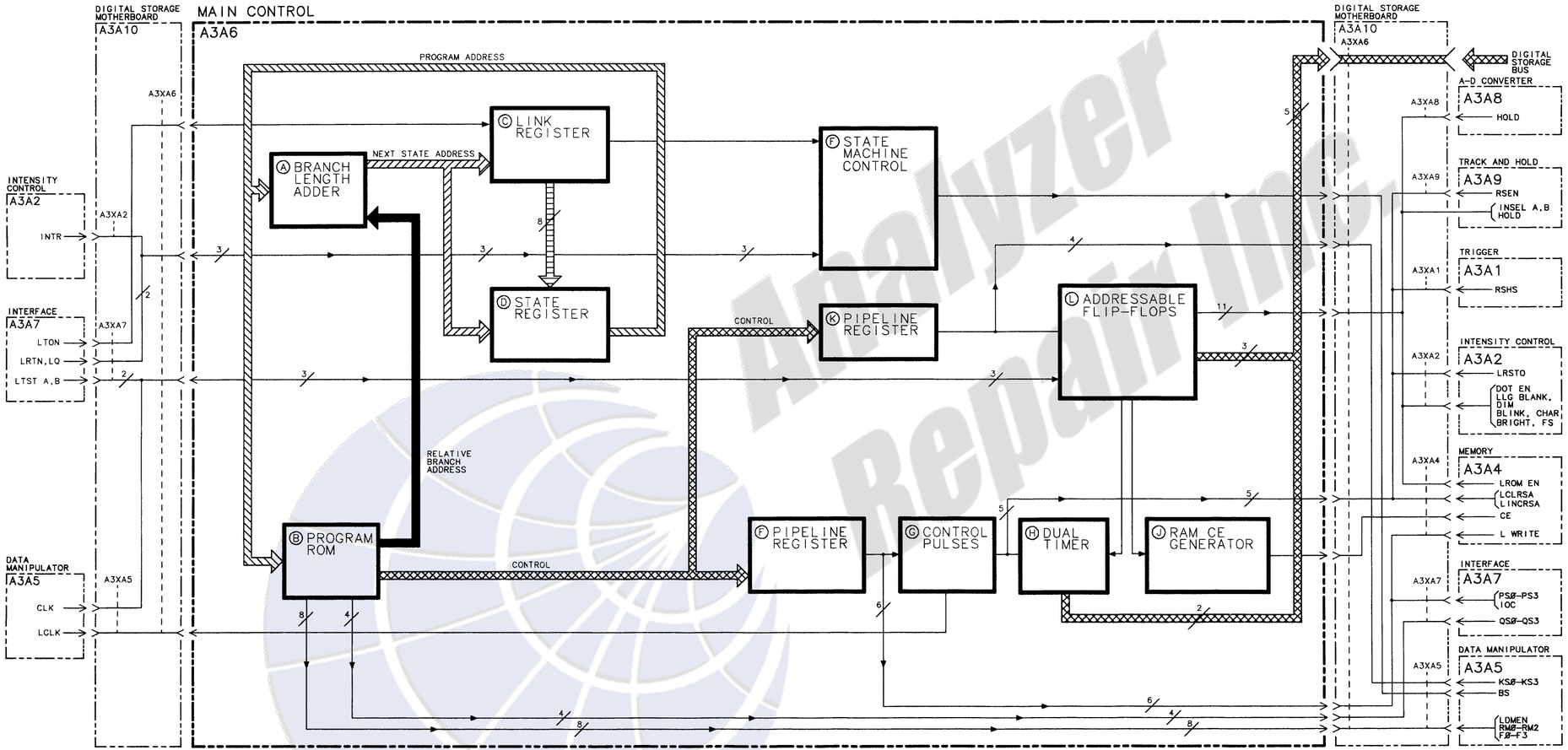

A3A6 MAIN CONTROL, BLOCK DIAGRAM

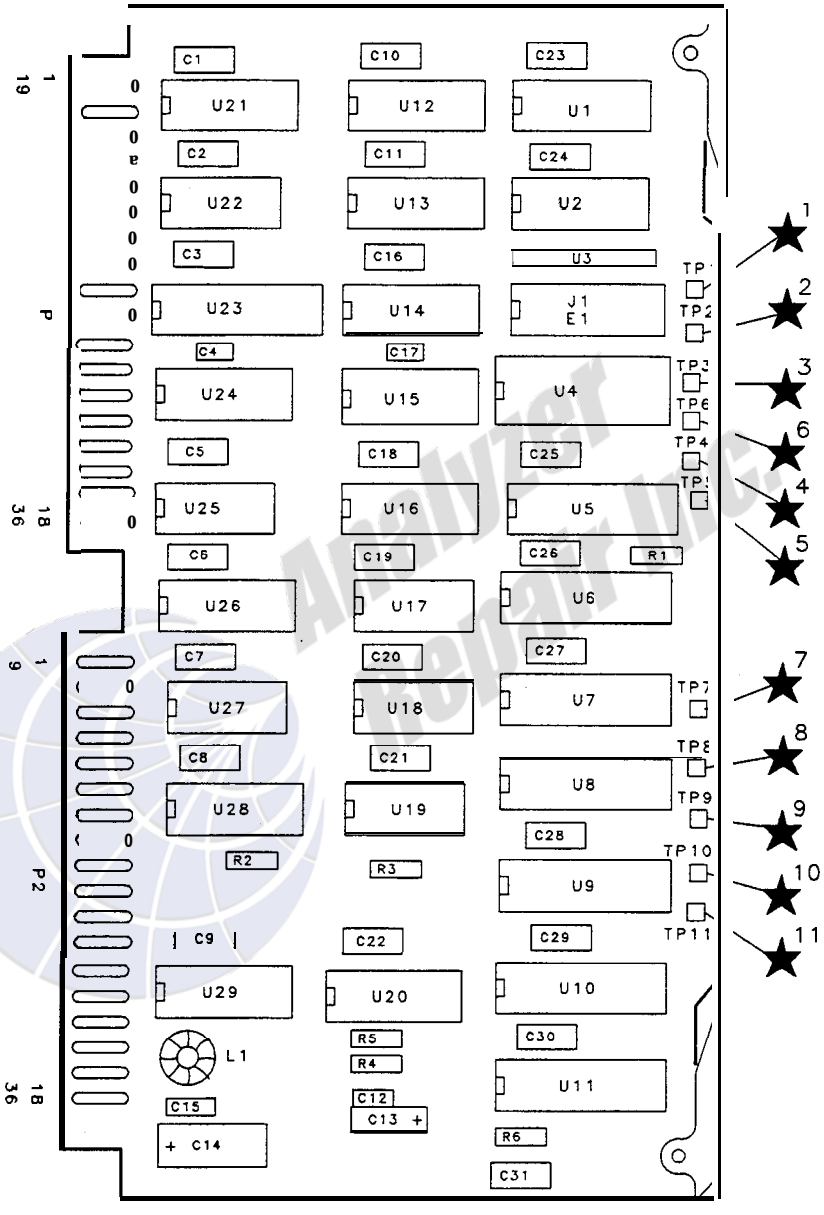

A3A6 Main Control Component Locations, 85662-60146

A3A6 MAIN CONTROL
85662-60146
(SERIAL PREFIX: 2403A)

P1

PIN	SIGNAL	TO/FROM	FUNCTION BLOCK
1	BRIGHT	A3A2P2-22	L
19	FS	A3A2P2-23	L
2	LLG BLANK	A3A2P2-24	L
20	BLINK	A3A2P2-25	L
3	DIM	A3A2P2-26	L
21	CHAR	A3A2P2-1	L
4	NC		
22	LRON EN	A3A4P1-20	L
5	CE	A3A4P1-22	J
23	INSEL A	A3A4P1-13	L
6	INSEL B	A3A4P1-12	L
24	DOT EN	A3A2P2-20	L
7	HOLD	A3A4P1-27, A3A5P1-16	L
25	PS3	A3A7P1-29	E
8	QS0	A3A7P1-30	B
26	PS2	A3A7P1-11	E
9	QS1	A3A7P1-31	B
27	PS1	A3A7P1-12	E
10	QS2	A3A7P1-32	B
28	PS0	A3A7P1-13	E
11	QS3	A3A7P1-33	B
29	IOC	A3A7P1-14	E
12	RS EN	A3A6P1-30	G
NC			
13	LTON	A3A7P1-15	C
31	NC		
14	LQ	A3A7P1-16	F
32	NC		
15	LCLRSA	A3A4P1-2	G
33	NC		
16	RSHS	A3A1P1-20	G
34	NC		
17	INCRSA	A3A4P1-21	G
35	LTST B	A3A7P2-4	L
18	LRSTO	A3A2P1-18	G
36	LTST A	A3A7P2-22	L

P2

PIN	SIGNAL	TO/FROM	FUNCTION BLOCK
1	KS1	A3A5P1-19	K
19	CLK	A3A7A2-6	L
2	KS0	A3A5P1-1	K
20	LCLK	A3A7P2-24	G
3	KS3	A3A5P1-20	K
21	BS	A3A5P1-3	F
4	KS2	A3A5P1-2	K
22	LWRITE	A3A4P1-19	E
5	RM2	A3A5P1-21	B
23	LRTN	A3A7P2-26	F
6	F3	A3A5P1-23	B
24	INTR	A3A2P2-28	F
7	F1	A3A5P1-24	B
25	RM1	A3A5P1-4	B
8	F2	A3A5P1-25	B
26	RM0	A3A5P1-5	B
9	LDMEN	A3A5P1-27	B
27	F0	A3A5P1-6	B
10	B8		H
28	B1		NC
11	B2		NC
29	B3		L
12	B4		L
30	B5		NC
13	B6	DIGITAL STORAGE BUS	L
31	B7		H
14	B8		NC
32	NC		
15	B10		NC
33	B11		NC
16	DGND		M
34	DGND		M
17	+5V		M
35	DGND		M
18	+5V		M
36	NC		

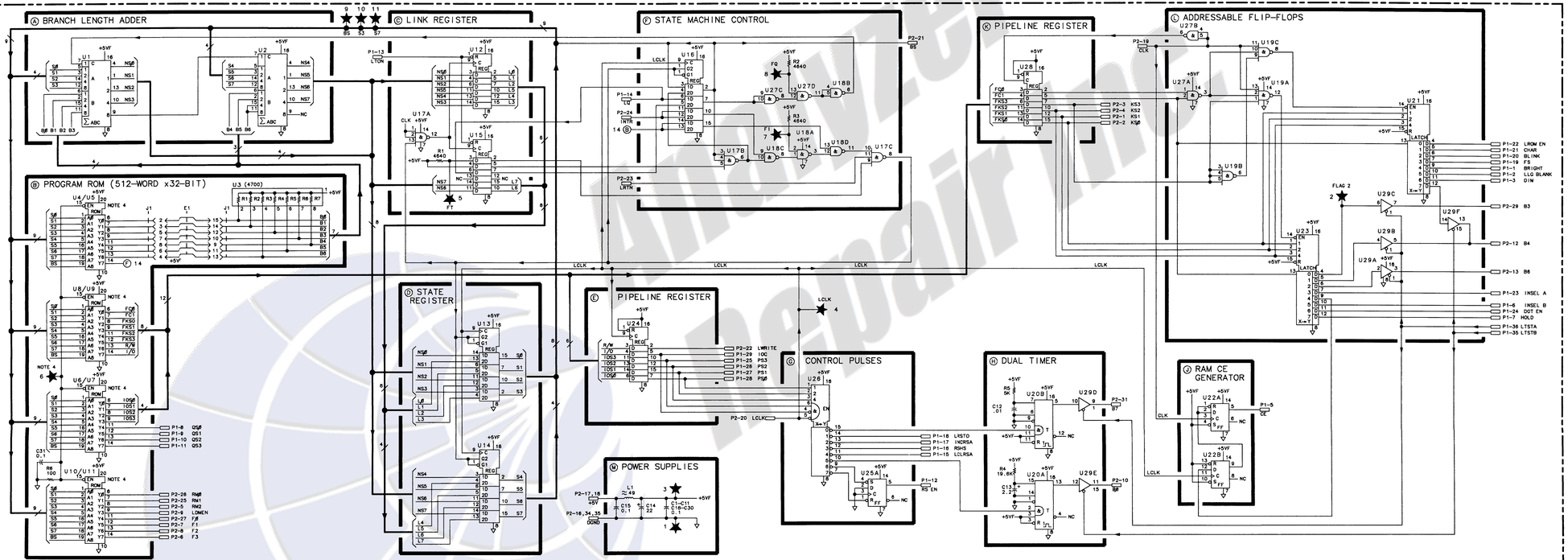

NOTES:

1. REFERENCE DESIGNATORS WITHIN THIS ASSEMBLY ARE ABBREVIATED. FOR COMPLETE REFERENCE DESIGNATION, PREFIX ABBREVIATION WITH ASSEMBLY DESIGNATION.
2. UNLESS OTHERWISE INDICATED: RESISTANCE IS IN OHMS (Ω) CAPACITANCE IS IN MICROFARADS (μF) INDUCTANCE IS IN MICROHENRIES (μH)
3. UNLESS OTHERWISE INDICATED: LOGIC LEVELS ARE TTL: +2.0V TO +5.0V=LOGIC '1' =HIGH 0V TO +0.8V=LOGIC '0' =LOW
4. ROMS U4-U11 ARE USED IN PAIRS. U4,U8; U5,U9; AND U11,U10 ARE THE MAIN PROGRAM ROMS U5,U7; U8, AND U10 ARE TEST PROGRAM ROMS. ALL CONNECTIONS TO EACH PAIR (U4,U8; U5,U9; U6,U7; U8,U9; AND U11,U10) ARE THE SAME EXCEPT PIN 19 AND PIN 20.

PIN 19	PIN 20
U4,U6,U9,U11	TP6
U5,U7,U8,U10	GND

TO ENABLE THE TEST PROGRAM, CONNECT TP3 TO TP6.

5. U3 PIN CONFIGURATION:

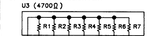

6. MNEMONIC TABLE:

MNEMONIC	DESCRIPTION
BRIGHT	BRIGHT CRT DISPLAY CONTROL
FS	FAST SWEEP MODE
LLG BLANK	LOW=LINE GENERATOR BLANKING CONTROL
BLINK	BLINK CRT DISPLAY CONTROL
DIM	DIM CRT DISPLAY CONTROL
CHAR	CHARACTER MODE DISPLAY CONTROL
LRON EN	LOW=RON ENABLE
CE	MEMORY CHIP ENABLE
INSEL A	INPUT SELECT BIT A
INSEL B	INPUT SELECT B
DOT EN	DOT ENABLE
HOLD	TRACK AND HOLD CONTROL
PS0-PS3	I/O PORT SELECTION BITS β-3
QS0-QS3	QUALIFIER SELECTION BITS β-3
IOC	I/O PORT INPUT/OUTPUT CONTROL
RSEN	RESET PEAK DETECTORS ENABLE
LTON	LOW=TURN ON
LQ	LOW=SELECTED QUALIFIER
LCLRSA	LOW=CLEAR STROKE ADDRESS
RSHS	RESET HIGH SWEEP
INCRSA	INCREMENT STROKE ADDRESS
LTSTB	LOW=INPUT TEST A DATA
LTSTB	LOW=INPUT TEST B DATA
LRSTO	LOW=RESET TRIGGER
KS0-KS3	CONSTANT SELECTION BITS β-3
CLK	8MHz SYSTEM CLOCK
LCLK	INVERTED CLOCK
BS	BLOCK SWITCH CONTROL
LDMEN	LOW=DATA MANIPULATOR OUTPUT ENABLE
LWRITE	MEMORY WRITE CONTROL
RM0-RM2	RAM REGISTER SELECTION BITS
LRTN	LOW=ENABLE INTERRUPT RETURN
F0-F3	PART OF FUNCTION SELECTION BITS β-2
INTR	INTERUPT CONTROL
B0-B11	DIGITAL STORAGE BUS DATA BITS β-11

7. UNLESS OTHERWISE INDICATED: SIGNALS ENTER AT LEFT SIDE AND EXIT AT RIGHT SIDE OF FUNCTION BLOCKS.

A3A6

A3A6 MAIN CONTROL, SCHEMATIC DIAGRAM

A3A7

A3A7 Interface, Circuit Description

A3A7 Interface provides data transfer between Al5 Controller and A3 Digital Storage. This assembly also includes qualifier selection for conditional branching, input/output (I/O) port decoding, and the main clock circuits.

Data Transfer Register Ⓐ

U2, U7, U8, and U9 form a 16-bit Data Transfer Register which can be loaded or output onto either the Instrument Bus (through U16 and U17, the Instrument Bus Drivers) or the Digital Storage Bus (through U3, U4, and U5, the Digital Storage Bus Drivers).

Instrument Address Decoder Ⓒ

U6, U14, and U15 control the loading and output of data between the Data Transfer Register and the Instrument Bus.

Qualifier Select Ⓗ

U20 and U21 select one of 16 qualifiers to be used for conditional branching. Selection is controlled by A3A6 Main Control firmware.

I/O Port Decoder Ⓓ

U18 and U19 decode I/O port control signals from the Pipeline Registers in A3A6 Main Control.

Timing Generator Ⓖ

U10, U11, U12, and U13 generate 8 MHz, 1 MHz, and 200 kHz timing signals used by A3 Digital Storage.

Analyzer Repair Inc.

A3A7 Interface, Troubleshooting

The A3A7 Interface assembly contains several different circuits. Testing the Timing Generator and Turn-on Control is probably best done with an oscilloscope to monitor the 8 MHz, 1 MHz, and 200 kHz outputs. The Qualifier Select circuit is checked, along with the A3A5 Data Manipulator assembly, using Test Program 2. The Digital Storage address check uses the self-check routine from the Al5 Controller in the RF Section.

The IOB interface circuitry is checked using the overall Test Program 4. The 50-wire Analyzer Bus Interconnect cable W31 is removed so that the U16 and U17 Bus Drivers Ⓑ can continually drive the IOB lines when A3A7TP8 is grounded. To check the data portion of the interface, the jumper is moved to pin 7. If a fault is found in verifying the data at the P2 connector, the jumper El is opened before probing U3 to U9. This opens the feedback from the Data Transfer Registers Ⓐ through the Bus Driver Ⓑ and back to the register Ⓐ. If all the Bus Driver Ⓑ outputs and the Digital Storage Bus Driver Ⓔ outputs are good when the jumper is opened, then the fault is in the register corresponding to the bad bit detected at the connector; that is, its IOB input is defective.

If the fault appears to be a bus fight problem (the Al5 Controller cannot properly drive the IOB data lines until A3A7 is removed), then the problem might be that the Bus Driver Ⓑ will not go into its high impedance output state. This can be determined by checking with an oscilloscope the IOBO-11 lines with the Analyzer Bus Interconnect cable disconnected and with A3A7TP8 not grounded. The lines should be "floating," usually between 1.4 V and 2 V. With the Analyzer Bus Interconnect cable disconnected, A1A8TP1 and A1A8TP2 must be jumpered to turn on the power supplies.

Analyzer Repair Hot

HP Part Number 85662-60127

A3A7 Interface

Reference Designation	HP Part Number	CD	Qty	Description	Mfr Code	Mfr Part Number
A3A7	85662-60127	2	1	INTERFACE BOARD ASSEMBLY	28480	85662-60127
A3A7C1	0160-4835	7	1	CAPACITOR-FXD .1UF +-10% 50VDC CER	04222	SA115C104KAAH
A3A7C2	0160-4835	7	1	CAPACITOR-FXD .1UF +-10% SOVDC CER	04222	SA115C104KAAH
A3A7C3	0160-4835	7	1	CAPACITOR-FXD .1UF +-10% 50VDC CER	04222	SA115C104KAAH
A3A7C4	0160-4835	7	1	CAPACITOR-FXD .1UF +-10% 50VDC CER	04222	SA115C104KAAH
A3A7C5	0160-4835	7	1	CAPACITOR-FXD .1UF +-10% 50VDC CER	04222	SA115C104KAAH
A3A7C6	0160-4835	7	1	CAPACITOR-FXD .1UF +-10% 50VDC CER	04222	SA115C104KAAH
A3A7C7	0160-4835	7	1	CAPACITOR-FXD .1UF +-10% SOVDC CER	04222	SA115C104KAAH
A3A7C8	0160-4835	7	1	CAPACITOR-FXD .1UF +-10% 50VDC CER	04222	SA115C104KAAH
A3A7C9	0160-4835	7	1	CAPACITOR-FXD .1UF +-10% SOVDC CER	04222	SA115C104KAAH
A3A7C10	0160-4835	7	1	CAPACITOR-FXD .1UF +-10% SOVDC CER	04222	SA115C104KAAH
A3A7C11	0160-4835	7	1	CAPACITOR-FXD .1UF +-10% SOVDC CER	04222	SA115C104KAAH
A3A7C12	0160-4835	7	1	CAPACITOR-FXD .1UF +-10% SOVDC CER	04222	SA115C104KAAH
A3A7C13	0160-4835	7	1	CAPACITOR-FXD .1UF +-10% 50VDC CER	04222	SA115C104KAAH
A3A7C14	0160-4835	7	1	CAPACITOR-FXD .1UF +-10% SOVDC CER	04222	SA115C104KAAH
A3A7C15	0160-4835	7	1	CAPACITOR-FXD .1UF +-10% 50VDC CER	04222	SA115C104KAAH
A3A7C16	0160-4835	7	1	CAPACITOR-FXD .1UF +-10% SOVDC CER	04222	SA115C104KAAH
A3A7C17	0160-4835	7	1	CAPACITOR-FXD .1UF +-10% SOVDC CER	04222	SA115C104KAAH
A3A7C18	0160-4835	7	1	CAPACITOR-FXD .1UF +-10% SOVDC CER	04222	SA115C104KAAH
A3A7C19	0160-4835	7	1	CAPACITOR-FXD .1UF +-10% 50VDC CER	04222	SA115C104KAAH
A3A7C20	0160-4835	7	1	CAPACITOR-FXD .1UF +-10% 50VDC CER	04222	SA115C104KAAH
A3A7C21	0160-4835	7	1	CAPACITOR-FXD .1UF +-10% SOVDC CER	04222	SA115C104KAAH
A3A7C22	0160-4835	7	1	CAPACITOR-FXD .1UF +-10% 50VDC CER	04222	SA115C104KAAH
A3A7C23	0160-4835	7	1	CAPACITOR-FXD .1UF +-10% SOVDC CER	04222	SA115C104KAAH
A3A7C24	0180-0228	6	1	CAPACITOR-FXD 22UF+-10% 15VDC TA	56289	150D226X9015B2-DYS
A3A7CR1	1901-0535	9	1	DIODE-SCHOTTKY SM SIG		
A3A7E1	1460-1489	8	1	WIREFORM BE CU AG	17450	
A3A7E2	1258-0124	7	1	SHUNT-PROGRAMMABLE 1 DBL PIN SET .100	91506	8136-475G1
A3A7J1	1200-1204	5	1	SOCKET-IC 14-CONT DIP DIP-SLDR	00779	2-641609-2
A3A7L1	08558-80011	6	1	FILTER COIL, BLUE	28480	08558-80011
A3A7L2	9100-1618	1	1	INDUCTOR RF-CH-MLD 5.6UH +-10% .166D-INX	99800	1537-30
A3A7MP1	1480-0073	6	2	PIN-ROLL .062-IN-DIA .25-IN-LG BE-CU	72962	99-012-062-0250
A3A7MP2	4040-0755	2	2	EXTR-PC BD VIO POLYC .062-IN-BD-THKNS 1-		
A3A7Q1	1854-0404	0	1	TRANSISTOR NPN SI TO-18 PD=360MW	04713	
A3A7R1	0757-0278	9	1	RESISTOR 1.78K +-1% .125W TF TC=0+-100	19701	SFR25H
A3A7R2	0757-0278	9	1	RESISTOR 1.78K +-1% .125W TF TC=0+-100	19701	SFR25H
A3A7R3	0757-0278	9	1	RESISTOR 1.78K +-1% .125W TF TC=0+-100	19701	SFR25H
A3A7R4	0757-0278	9	1	RESISTOR 1.78K +-1% .125W TF TC=D+-100	19701	SFR25H
A3A7S1	3101-2170	8	1	SWITCH-PB SPDT MOM	09353	8125-D8AE
A3A7TP1	0360-0535	0	1	TERMINAL-TEST POINT .330IN ABOVE	46819	
A3A7TP2	0360-0535	0	1	TERMINAL-TEST POINT .330IN ABOVE	46819	
A3A7TP3	0360-0535	0	1	TERMINAL-TEST POINT .330IN ABOVE	46819	
A3A7TP4	0360-0535	0	1	TERMINAL-TEST POINT .330IN ABOVE	46819	
A3A7TP5	0360-0535	0	1	TERMINAL-TEST POINT .330IN ABOVE	46819	
A3A7TP6	0360-0535	0	1	TERMINAL-TEST POINT .330IN ABOVE	46819	
A3A7TP7	0360-0535	0	1	TERMINAL-TEST POINT .330IN ABOVE	46819	
A3A7TP8	0360-0535	0	1	TERMINAL-TEST POINT .330IN ABOVE	46819	

**Indicates factory-selected value*

HP Part Number 85662-60127

A3A7 Interface

Reference Designatior	HP Part Number	C. D	Qty	Description	Mfr Code	Mfr Part Number
A3A7TP9	0360-0535	C	1	TERMINAL-TEST POINT .330IN ABOVE	46819	
A3A7TP10	0360-0535	C	1	TERMINAL-TEST POINT .330IN ABOVE	46819	
A3A7U1	1810-0206	8	1	NETWORK-RES 8-SIP 10.0K OHM X 7	11236	750-81
A3A7U2	1820-1444	9	1	IC MUXR/OATA-SEL TTL LS Z-TO-1-LINE QUAD	01698	SN74LS298N
A3A7U3	1820-1491	6	1	IC BFR TTL LS NON-INV HEX 1-INP	01698	SN74LS367AN
A3A7U4	1820-1491	6	1	IC BFR TTL LS NON-INV HEX 1-INP	01698	SN74LS367AN
A3A7U5	1820-1491	6	1	IC BFR TTL LS NON-INV HEX 1-INP	01698	SN74LS367AN
A3A7U6	1820-1202	7	1	IC GATE TTL LS NAND TPL 3-INP	01698	SN74LS10N
A3A7U7	1820-1444	9	1	IC MUXR/OATA-SEL TTL LS Z-TO-1-LINE QUAD	01698	SN74LS298N
A3A7U8	1820-1444	9	1	IC MUXR/OATA-SEL TTL LS Z-TO-1-LINE QUAD	01698	SN74LS298N
A3A7U9	1820-1444	9	1	IC MUXR/OATA-SEL TTL LS L-TO-1-LINE QUAD	01698	SN74LS298N
A3A7U10	1820-1431	4	1	IC CNTR TTL LS DECD SYNCHRO POS-EDGE-TRI	01698	SN74LS162AN
A3A7U11	1820-0693	8	1	IC FF TTL S D-TYPE POS-EDGE-TRIG PRESET/	01698	SN74S74N
A3A7U12	1820-1432	5	1	IC CNTR TTL LS BIN SYNCHRO POS-EDGE-TRIG	01698	SN74LS163AN
A3A7U13	1820-2592	C	1	IC OSC TTL LS	01698	SN74LS32ON
A3A7U14	1820-1202	7	1	IC GATE TTL LS NAND TPL 3-INP	01698	SN74LS10N
A3A7U15	1820-1416	5	1	IC SCHMITT-TRIG TTL LS INV HEX 1-INP	01698	SN74LS14N
A3A7U16	1820-1491	6	1	IC BFR TTL LS NON-INV HEX 1-INP	01698	SN74LS367AN
A3A7U17	1820-1491	6	1	IC BFR TTL LS NON-INV HEX 1-INP	01698	SN74LS367AN
A3A7U18	1820-1240	3	1	IC DCOR TTL 3-TO-8-LINE 3-INP	01698	SN74S138N
A3A7U19	1820-1240	3	1	IC DCDR TTL S 3-TO-8-LINE 3-INP	01698	SN74S138N
A3A7U20	1820-1302	8	1	IC MUXR/DATA-SEL TTL S 8-TO-1-LINE 8-INP	01698	SN74S251N
A3A7U21	1820-1302	8	1	IC MUXR/DATA-SEL TTL S 8-TO-1-LINE 8-INP	01698	SN74S251N
A3A7VR1	1902-3036	3	1	DIODE-ZNR 3.16V 5% DO-7 PD=.4W TC=-.064%	04713	
A3A7W1	8151-0013	4	1	WIRE 22AWG 1X22	92194	298
A3A7Y1	1410-0758	6	1	CRYSTAL-QUARTZ 15.824 MHZ HC-18/U-HLDR	33096	

Indicates factory-selected value

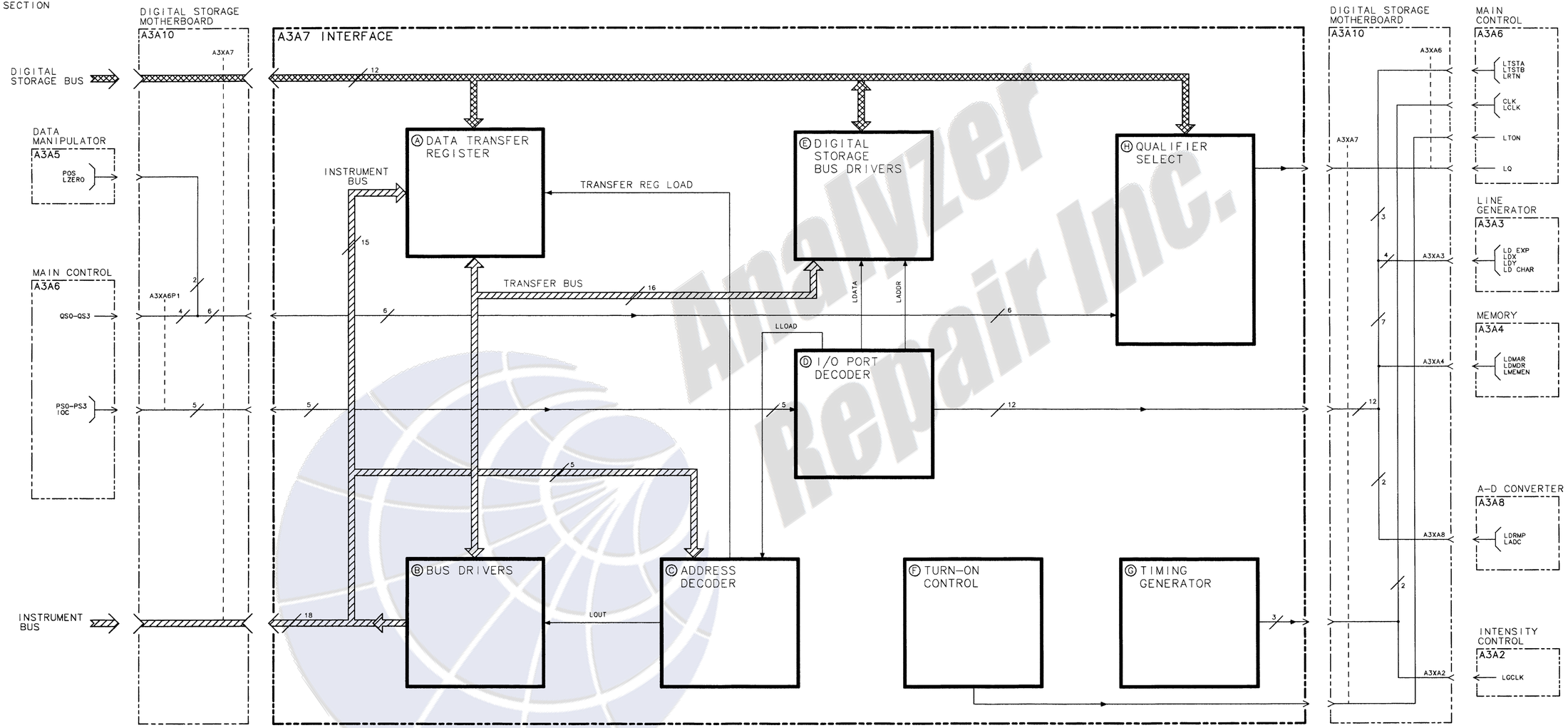

A3A7 INTERFACE, BLOCK DIAGRAM

Analyzer Repair Inc.

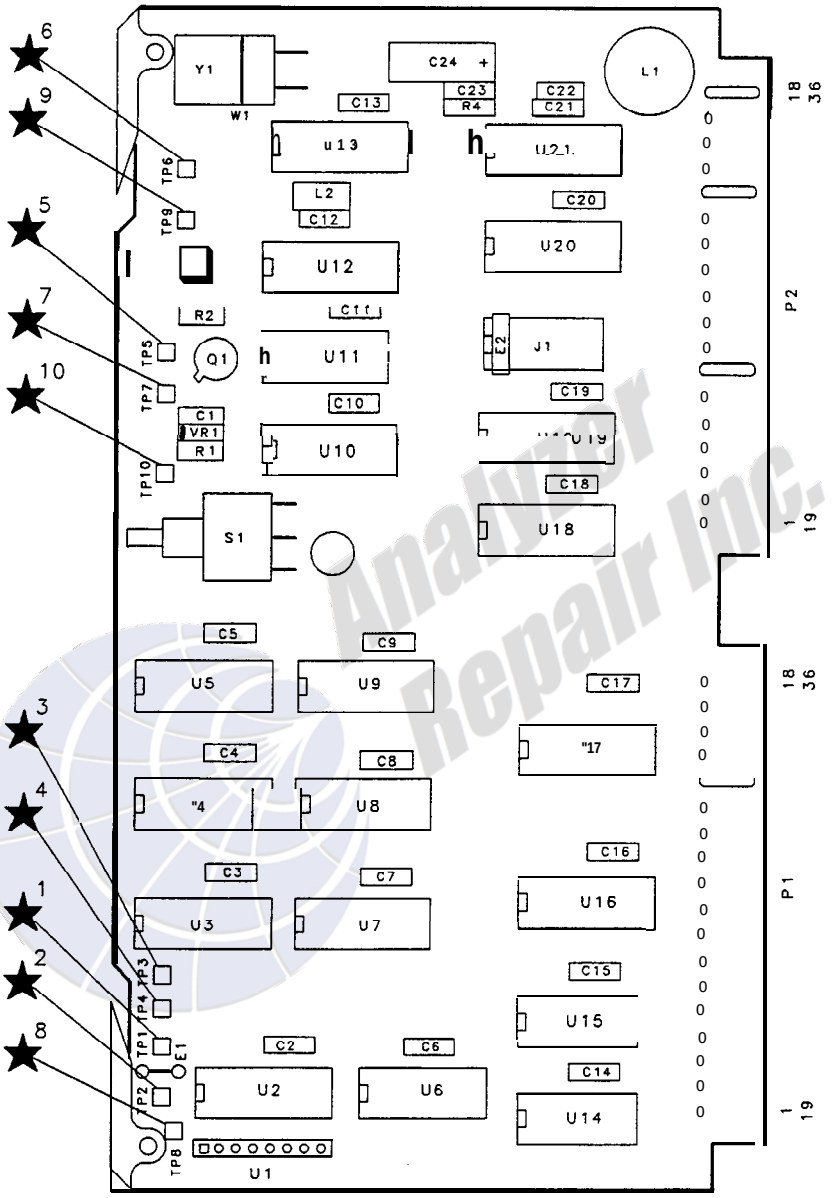

A3A7 Interface Component Locations, 85662-60127

A3A7 INTERFACE
85662-60127
(SERIAL PREFIX: 2403A)

P1

PIN	SIGNAL	TO/FROM	FUNCTION BLOCK
			A B C
1	ADS0		
19	ADR2		
2	ADR4		
20	LTI0		
3	ADR3		
21	ADR1		
4	IOB6		
22	IOB4		
5	IOB5	INSTRU-MENT BUS	
23	IOB7		
6	IOB1		
24	IOB3		
7	IOB2		
25	IOB0		
8	IOB11		
26	IOB9		
9	IOB10		
27	IOB8		A B C
10	NC		
28	LDSR	A3A10J2-46	A
11	PS2	A3ABP1-26	D
29	PS3	A3ABP1-25	D
12	PS1	A3ABP1-27	D
30	QS0	A3ABP1-8	H
13	PS0	A3ABP1-28	D
31	QS1	A3ABP1-9	H
14	IOC	A3ABP1-29	D
32	QS2	A3ABP1-10	H
15	LTON	A3ABP1-13	F
33	QS3	A3ABP1-11	H
16	LQ	A3ABP1-14	H
34	NC		
17	NC		
35	NC		
18	NC		
36	LD EXP	A3A3P2-19	D

P2

PIN	SIGNAL	TO/FROM	FUNCTION BLOCK
1	LDX	A3A3P2-22	D
19	LDCHAR	A3A3P2-20	D
2	LD MDR	A3AMP1-5	D
20	LDY	A3A3P1-21	D
3	LD MAR	A3AMP1-23	D
21	LD RMP	A3ABP1-8	D
4	LTST B	A3ABP1-35	D
22	LTST A	A3ABP1-36	D
5	LMEM EN	A3ABP1-4	D
23	LADC	A3ABP1-9	D
6	CLK	(A3A5P1-8 A3A5P1-19 A3A5P1-20 A3A5P1-33)	G
24	LCLK		G
7	NC		
25	1MHz	A3ABP1-7	G
8	LG CLK	A3AP2-19	G
26	LRTN	A3A6P2-23	D
9	LZERO	A3A5P1-26	H
27	POS	A3ABP1-7	H
10			A
28			
11			B
29			
12		INSTRU-MENT BUS	B
30			
13			B
31			
14			B
32			
15			A
33			
16	GND		I
34	GND1		I
17	+5V		I
35	NC		
18	+5V		I
36	NC		

① POWER SUPPLIES

Ⓐ DATA TRANSFER REGISTER

Ⓑ BUS DRIVER

Ⓒ ADDRESS DECODER

Ⓓ I/O PORT DECODER

Ⓔ DIGITAL STORAGE BUS DRIVERS

Ⓕ TURN-ON CONTROL

Ⓖ TIMING GENERATOR

Ⓗ QUALIFIER SELECT

NOTES:

1. REFERENCE DESIGNATORS WITHIN THIS ASSEMBLY ARE ABBREVIATED. FOR COMPLETE REFERENCE DESIGNATION, PREFIX ABBREVIATION WITH ASSEMBLY DESIGNATION.
2. UNLESS OTHERWISE INDICATED: RESISTANCE IS IN OHMS (Ω) CAPACITANCE IS IN MICROFARADS (μF) INDUCTANCE IS IN MICROHENRIES (μH)
3. UNLESS OTHERWISE INDICATED: LOGIC LEVELS ARE TTL: +2.0V TO +5.0V = LOGIC '1' =HIGH 0V TO +0.8V = LOGIC '0' =HIGH
4. MNEMONIC TABLE:

MNEMONIC	DESCRIPTION
ADR0–ADR4	INSTRUMENT BUS ADDRESS BITS 0–4
IOB0–IOB11	INSTRUMENT BUS DATA BITS 0–11
PS0–PS3	I/O PORT SELECTION BITS
QS0–QS3	QUALIFIER SELECTION BITS
DOTEN	DOT ENABLE
LDSR	LOW=DIGITAL STORAGE READY
IOC	I/O PORT INPUT/OUTPUT CONTROL
LTON	TURN ON CONTROL (LOW TRUE)
LQ	QUALIFIER SELECTION (LOW TRUE)
LD EXP	LOAD EXPAND REGISTER
LDX	LOAD X POSITION REGISTER
LDY	LOAD Y POSITION REGISTER
LDCHAR	LOAD CHARACTER REGISTER
LD MDR	LOAD MEMORY DATA REGISTER
LD MAR	LOAD MEMORY ADDRESS REGISTER
LD RMP	LOAD RAMP REGISTER
LTST A	LOW=INPUT TEST A DATA
LTST B	LOW=INPUT TEST B DATA
LMEM EN	LOW=ENABLE MEMORY OUTPUT
LADC	LOW=ENABLE ADC OUTPUT
LRTN	LOW=ENABLE INTERRUPT RETURN
LZERO	ZERO CHECK ON ALU RESULT OUTPUT (LOW TRUE)
POS	SIGN OF ALU RESULTS (HIGH=+, LOW=-)
CLK	8MHz SYSTEM CLOCK
LCLK	INVERTED CLOCK
LG CLK	200kHz LINE GENERATOR CLOCK
LTI0	LOW=IF DISPLAY SECTION STROBE

5. U19 PIN CONFIGURATION:

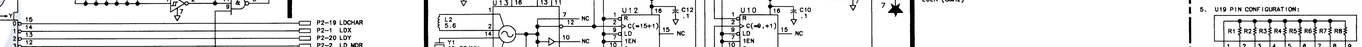

A3A8

A3A8 Analog-Digital Converter, Circuit Description

A3A8 Analog-Digital Converter converts the analog VIDEO signal from A3A9 Track and Hold into storable digital data for A3 Digital Storage. The important data and control lines are: all Digital Storage Bus bits, B0-B11, which are used for data inputs and outputs, ADC, which loads final ADC data onto the Digital Storage Bus; HOLD, which resets the ADC and initiates a conversion; LD RMP, which updates the Ramp DAC with a new scan address; and LTSTA, which enables test bits (BO, B1, and B2), RAMP, LTRK, and BUSY onto the Digital Storage Bus.

ADC Ⓐ

The ADC (analog-to-digital) circuit converts analog (sampled video) data from A3A9 Track and Hold onto 10 bits of binary code using the technique of successive approximation. A simplified schematic of the ADC circuit is shown in Figure l-l.

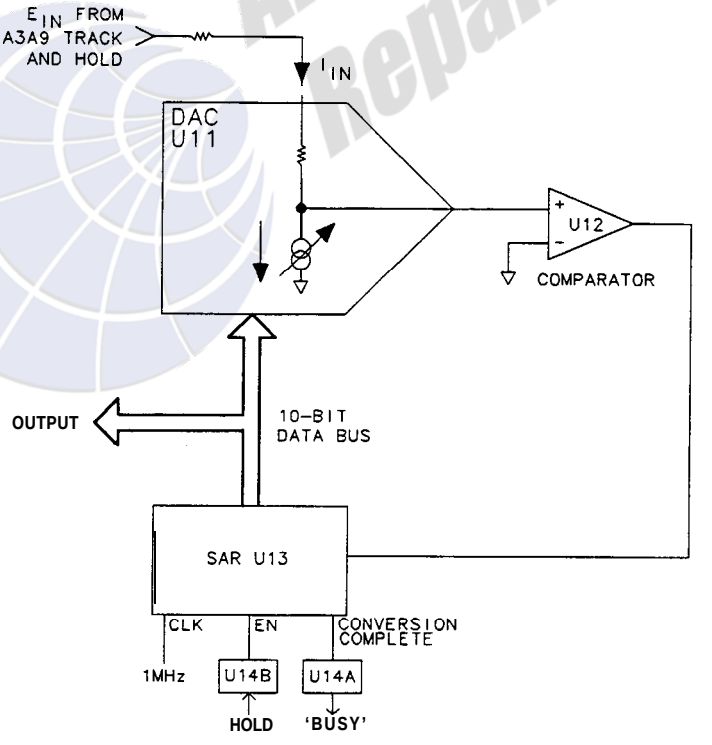

Figure 1. A3A8 Analog-Digital Converter, Simplified Schematic

The ADC circuit consists of digital-to-analog converter (DAC) U11, comparator U12, and successive approximation register U13. A 1 MHz clock fixes conversion time at 11 μs. To

begin a conversion, the ADC is first reset to ones by a low HOLD. When HOLD goes high, each bit is individually tried in a "trial" conversion, starting with the most significant bit. A decision is made to retain or drop the bit based on the comparator output. Once the decision has been made for each of the 10 bits, a "conversion-complete" signal sets the flip-flop U14A. This signal, called BUSY, can be transferred onto the Digital Storage Bus by the BUS Buffers **u15.**

Ramp Converter ©

The Ramp Converter makes a comparison between the analog sweep signal and the scan address (X Axis). Comparator U1 makes this comparison and produces a signal called RAMP. RAMP high indicates that the scan address needs to be updated. When RAMP is low, no update is needed. When an update occurs, a new address is latched into the Scan Address latches U9 and U10. This results in an updated comparison between the output of DAC U5 and the Sweep input as shown in the simplified schematic (Figure l-2). A reference voltage is created for the DAC by VR1 and U3. This voltage is adjustable by R5 to set the full-scale (+10.000 V) sweep ramp point at the 1000th data "bucket"; the rightmost edge of the CRT trace. Amplifier U2 sums the currents from the DAC U5, the sweep input, and ZERO stick, and drives the comparator input. OFFS is adjustable by R6.

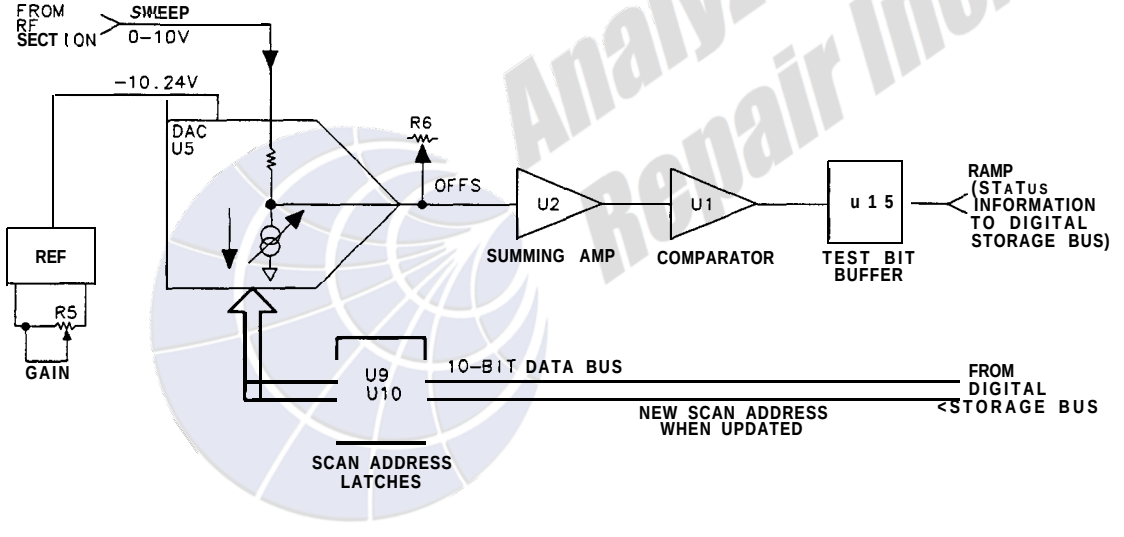

Figure 2. Ramp Converter, Simplified Schematic

Analyzer Repair Inc.

A3A8 Analog-Digital Converter, Troubleshooting

The A3A8 Analog Digital Converter converts the analog video and sweep voltages to digital data. Consequently, a failure on this assembly will affect the display of trace A and trace B data. Character and graticule generation are not affected by A3A8.

Stuck bits in the Ramp Converter will distort the displayed signal. This is most easily observed with slow sweep times. When a bit fails, the Ramp Converter will default to a 20 ms sweep rate during the display period when that bit would normally be working. Figure 1-3 is an example of the CAL OUTPUT signal with a 3 s sweep time when U5 pin 5 is struck low.

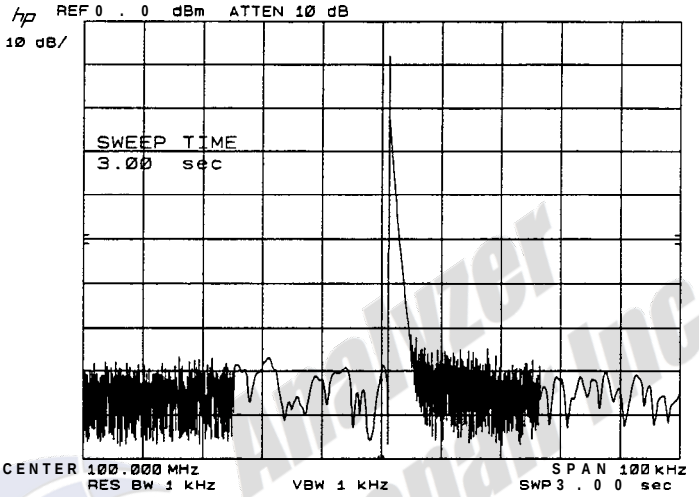

Note

Center Frequency Readout will be 20.000 000 MHz for an HP 8568B/HP 8567A

Figure 3. Ramp Converter Bit Failure

By looking at noise with a 3 s sweep time (push Instrument Preset first), it is possible to determine which of the data bits are stuck by counting the discrete states displayed. For example, Figure 4 shows the result of an MSB failure (D9). 2^{10-9} = 2 states are displayed. To detect low order bit (DO-D4) failures, tune to the CAL OUTPUT signal and set frequency span to 100 kHz, sweep time to 3 s. A failure will then result in slight "stair-stepping" of the displayed signal. The noise display will be missing states, but this will be difficult to see.

Digital Storage Test Program 4 is used to verify the inputs to the DAC, U5. If VR1 is close to the low end of its tolerance, V_{REF} of DAC U5 may not be properly set.

Failures in the video analog to digital process are characterized by "stair-stepped" signals and noise that is displayed as discrete vertical lines. Low order bit failures will cause many small steps while a high order bit failure will cause a single step that will eliminate the peak of the display. Note that only the signal will be affected and that the graticules and characters will not be affected. Front panel displays of the CAL OUTPUT signal for several bit failures are shown in Figures 5 and 6.

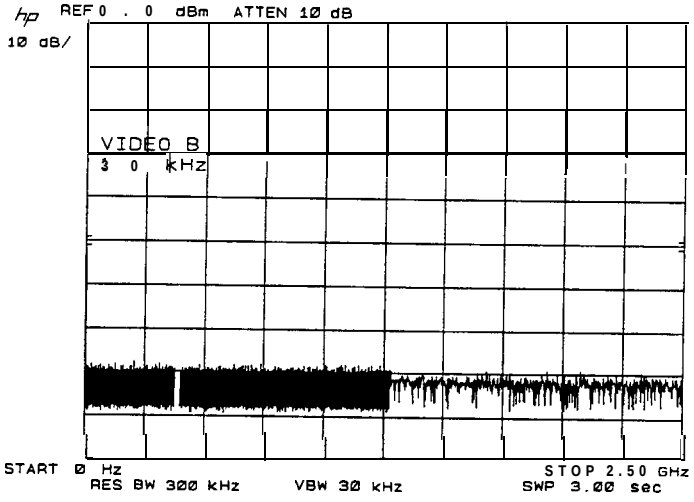

Note Stop Frequency Readout will be 1.50 GHz for HP 8568B/HP 8567A.

Figure 4. Ramp Converter MSB Failure

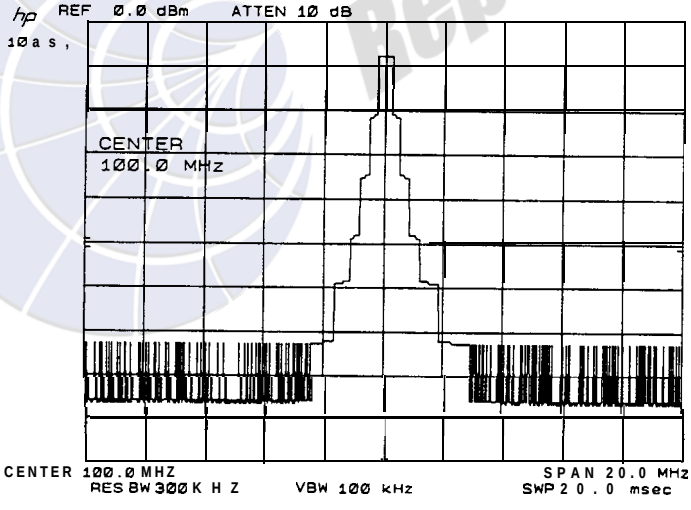

Note Center Frequency Readout will be 20.000 000 MHz for an HP 8568B/HP 8567A.

Figure 5. Video ADC Bit 5 Failure

Analyzer Repair Inc.

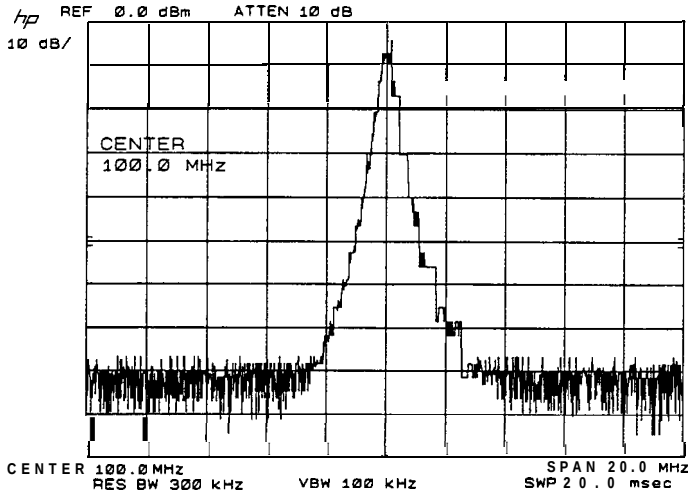

Note

Center Frequency Readout will be 20.000 000 MHz for an HP 8568B/HP 8567A.

Figure 6. Video ADC Bit 2 Failure

If the RAMP, HOLD or BUSY lines become stuck, the display will show a sweep related problem. If the analyzer is not sweeping, the Sweep System Troubleshooting notes should be consulted to help isolate the failure to a particular assembly.

Table 1 contains the display symptoms that result from failures of the RAMP, HOLD or BUSY lines.

Table 1. A3A8 Sweep Related Failure Symptoms

Line	Failure	
	Stuck High	Stuck Low
BUSY	Sweep LED on Line at bottom of display CK LED I on after Instrument Preset	Displayed signals noisy and similar to Figure l-5.
RAMP	Display jitter along X axis Frequency readout incorrect	Sweep LED on Line at bottom of display
HOLD	Line at top of display	Sweep LED on Line at bottom of display CK LED I on after Instrument Preset

Analyzer Repair Inc.

Test Circuit

The test circuit on A3A8 is designed to aid in troubleshooting lower-order bit failures and linearity problems in both the Ramp Converter circuit and the ADC circuit. The test circuit is normally transparent to A3A8 operation, and is activated by grounding A3A8TP8 NOISE TEST or A3A8TP10 RAMP TEST to A3A8TP9 to switch multiplexers U16, U17, and U18.

Noise Test

The Noise Test, activated by grounding A3A8TP8 NOISE TEST to A3A8TP9, "expands" the vertical scale of the Digital Storage Section for closer examination of digital data from the ADC circuit. This is accomplished by shifting the 4 least significant bits (LSBs) of the digitized video data by 6 bits, effectively multiplying it by 64. When the noise test is activated, the 6 most significant bits (MSBs) are not used, and the 6 LSBs are forced to logic 0. In addition, the "new" MSB is inverted to center the CRT trace (assuming the VIDEO input signal was at top-screen). The resulting CRT trace appears to be amplified to 64 times the normal resolution allowing variations in the LSBs to be easily viewed.

With the noise test activated, a constant VIDEO signal present at the input to A3A9 Track and Hold will ideally produce a flat CRT trace. The CRT trace should exhibit no more than 2 bits peak-to-peak of digital noise.

Stuck ADC bits and transistor noise on A3A8 can be easily checked in the noise test mode by removing A3A9 Track and Hold from the instrument and jumpering A3A8TP2 SWP/100 to A3A8TP6 VIDEO. This substitutes a scaled-down sweep ramp signal for the VIDEO input signal to the ADC. A series of approximately 10 stair-steps should be displayed on the CRT, each with sharp, well-defined corners.

The noise test mode can be used to adjust the peak detector offsets (OFS POS and OFS NEG) on A3A9 Track and Hold by grounding A3A9TP3 to A3A9TP1, with the VIDEO cable (96) disconnected from A3A9J1. The CRT trace will fall on the bottom graticule line when both offsets on A3A9 are properly adjusted.

Ramp Test

The Ramp test is very similar to the Noise Test, and is activated by grounding A3A8TP10 RAMP TEST to A3A8TP9. In addition, the VIDEO cable (96) is disconnected from A3A9J1, and A3A8TP1 SWP is jumpered to A3A9TP3 to substitute the sweep ramp signal as the VIDEO input to A3A9 Track and Hold. In the ramp test mode, the test circuit again "expands" the vertical CRT scale by a factor of 64. The 4 LSBs of digital scan data are subtracted from the 4 LSBs of digitized video data, and the results are displayed on the CRT. Since both sets of digital data correspond to the sweep ramp voltage, the subtraction ideally yields a constant value (011100000=448). If the Track and Hold, ADC, and Ramp Converter circuits are linear and functioning properly, a horizontal line will appear approximately 1/2-division below the center CRT graticule line. This line might exhibit numerous noise-like spikes in peak-detector mode, which is normal.

Linearity and noise in the Ramp Converter, ADC, and Track and Hold circuits can also be checked without using the ramp test. As before, disconnect the VIDEO cable (96) from A3A9J1 and jumper A3A8TP1 SWP to A3A9TP3. This substitutes the sweep ramp signal as the VIDEO input to A3A9 Track and Hold. A straight diagonal line should be displayed on the CRT, indicating linear digitizing of the analog sweep ramp signal by both the ADC and the Ramp Converter circuits.

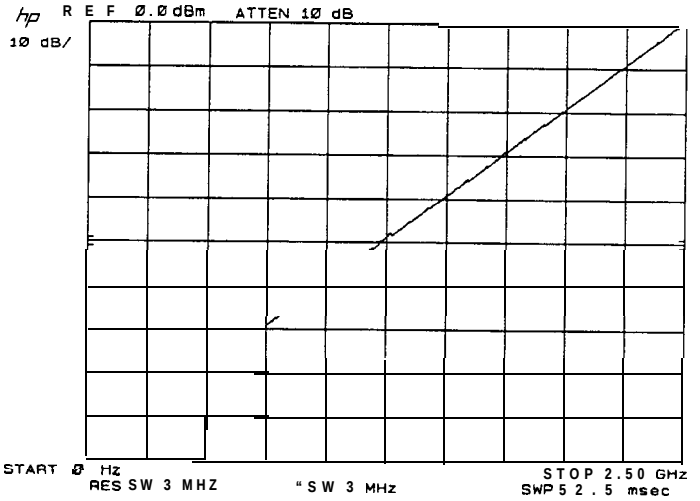

Note Stop Frequency Readout will be 1.50 GHz for HP 8568B/HP 8567A.

Figure 7. A3A8 DAC Linearity

Analyzer Repair Inc.

HP Part Number 85662160130

A3A8 Analog-Digital Converter

Reference Designation	HP Part Number	C.D	Qty	Description	Mfr Code	Mfr Part Number
A3A8	85662-60130	7	1	BOARD ASSEMBLY, ANALOG-DIGITAL CONVERTER	28480	85662-60130
A3A8C1	0160-4814	2	1	CAPACITOR-FXD 150PF +-5% 100VDC CER 0+-3	04222	SA101A151JAAH
A3A8C2	0160-4835	7	1	CAPACITOR-FXD .1UF +-10% SOVDC CER	04222	SA115C104KAAH
A3A8C3	0160-4835	7	1	CAPACITOR-FXD .1UF +-10% SOVDC CER	04222	SA115C104KAAH
A3A8C4	0160-4835	7	1	CAPACITOR-FXD .1UF +-10% 50VDC CER	04222	SA115C104KAAH
A3A8C5	0160-4835	7	1	CAPACITOR-FXD .1UF +-10% 50VDC CER	04222	SA115C104KAAH
A3A8C6	0160-4835	7	1	CAPACITOR-FXD .1UF +-10% SOVDC CER	04222	SA115C104KAAH
A3A8C7	0160-4835	7	1	CAPACITOR-FXD .1UF +-10% 50VDC CER	04222	SA115C104KAAH
A3A8C8	0160-4835	7	1	CAPACITOR-FXD .1UF +-10% SOVDC CER	04222	SA115C104KAAH
A3A8C9	0160-4835	7	1	CAPACITOR-FXD .1UF +-10% 50VDC CER	04222	SA115C104KAAH
A3A8C10	0160-4835	7	1	CAPACITOR-FXD .1UF +-10% 50VDC CER	04222	SA115C104KAAH
A3A8C11	0160-4835	7	1	CAPACITOR-FXD .1UF +-10% 50VDC CER	04222	SA115C104KAAH
A3A8C12	0160-4835	7	1	CAPACITOR-FXD .1UF +-10% SOVDC CER	04222	SA115C104KAAH
A3A8C13	0160-4835	7	1	CAPACITOR-FXD .1UF +-10% SOVDC CER	04222	SA115C104KAAH
A3A8C14	0160-4835	7	1	CAPACITOR-FXD .1UF +-10% SOVDC CER	04222	SA115C104KAAH
A3A8C15	0160-4835	7	1	CAPACITOR-FXD .1UF +-10% 50VDC CER	04222	SA115C104KAAH
A3A8C16	0160-4835	7	1	CAPACITOR-FXD .1UF +-10% SOVDC CER	04222	SA115C104KAAH
A3A8C17	0160-4835	7	1	CAPACITOR-FXD .1UF +-10% 50VDC CER	04222	SA115C104KAAH
A3A8C18	0160-4835	7	1	CAPACITOR-FXD .1UF +-10% 50VDC CER	04222	SA115C104KAAH
A3A8C19	0180-0229	7	1	CAP-FXD 33uF 10 V TA	56289	150D336X9010B2-DYS
A3A8C20	0180-1746	5	1	CAPACITOR-FXD 15UF+-10% 20VDC TA	56289	150D156X9020B2-DYS
A3A8C21	0180-1746	5	1	CAPACITOR-FXD 15UF+-10% 20VDC TA	56289	150D156X9020B2-DYS
A3A8C22	0160-4835	7	1	CAPACITOR-FXD .1UF +-10% 50VDC CER	04222	SA115C104KAAH
A3A8C23	0160-4835	7	1	CAPACITOR-FXD .1UF +-10% 50VDC CER	04222	SA115C104KAAH
A3A8C24	0160-4835	7	1	CAPACITOR-FXD .1UF +-10% 50VDC CER	04222	SA115C104KAAH
A3A8C25	0160-4835	7	1	CAPACITOR-FXD .1UF +-10% SOVDC CER	04222	SA115C104KAAH
A3A8C26	0160-4835	7	1	CAPACITOR-FXO .1UF +-10% SOVDC CER	04222	SA115C104KAAH
A3A8C27	0160-4835	7	1	CAPACITOR-FXD .1UF +-10% 50VDC CER	04222	SA115C104KAAH
A3A8C28	0160-4835	7	1	CAPACITOR-FXD .1UF +-10% SOVDC CER	04222	SA115C104KAAH
A3A8C29	0160-4835	7	1	CAPACITOR-FXD .1UF +-10% 50VDC CER	04222	SA115C104KAAH
A3A8C30	0160-4835	7	1	CAPACITOR-FXD .1UF +-10% SOVDC CER	04222	SA115C104KAAH
A3A8CR1	1901-0535	9	1	DIODE-SCHOTTKY SM SIG		
A3A8CR2	1901-0535	9	1	DIODE-SCHOTTKY SM SIG		
A3A8CR3	1901-0535	9	1	DIODE-SCHOTTKY SM SIG		
A3A8CR4	1901-0535	9	1	DIODE-SCHOTTKY SM SIG		
A3A8CR5	1901-0535	9	1	DIODE-SCHOTTKY SM SIG		
A3A8CR6	1901-0535	9	1	DIODE-SCHOTTKY SM SIG		
A3A8E1	1460-1489	8	1	WIREFORM BE CU AG	17450	
A3A8J1	1250-0543	8	1	CONNECTOR-RF SM-SNP M PC 50-OHM	98291	51-053-0349-BE8
A3A8L1	08558-80011	6	1	FILTER COIL, BLUE	28480	08558-80011
A3A8L2	9140-0114	4	1	INDUCTOR RF-CH-MLD 10UH +-10% .166D-INX.	99800	1537-36
A3A8L3	9140-0114'	4	1	INDUCTOR RF-CH-MLD 10UH +-10% .166D-INX.	99800	1537-36
A3A8MP1	4040-0747	2	2	EXTR-PC BD GRA POLYC .062-IN-BD-THKNS 1-		
A3A8MP2	1480-0073	6	2	PIN-ROLL .062-IN-DIA .25-IN-LG BE-CU	72962	99-012-062-0250
A3A8R1	0757-0280	3	1	RESISTOR 1K +-1% .125W TF TC=0+-100	19701	SFR25H
A3A8R2	0757-0438	3	1	RESISTOR 5.11K +-1% .125W TF TC=0+-100	19701	SFR25H
A3A8R3	0757-0438	3	1	RESISTOR 5.11K +-1% .125W TF TC=0+-100	19701	SFR25H

**Indicates factory-selected value*

HP Part Number 85662-60130

A3A8 Analog-Digital Converter

Reference Designation	HP Part Number	CD	Qty	Description	Mfr Code	Mfr Part Number
A3A8R4	)757-0280	.	1	RESISTOR 1K +-1% .125W TF TC=0+-100	19701	SFR25H
A3A8R5	2100-3123	(	1	RESISTOR-TRMR 500 10% TKF SIDE-AOJ 17-TF	7313E	89PR500
A3A8R6	2100-3054	6	1	RESISTOR-TRMR 50K 10% TKF SIDE-ADJ 17-TF	7313E	89PR50K
A3A8R7	)698-6630	3	1	RESISTOR 20K +-0.1% .125W TF TC=0+-25	19701	5033R
A3A8R8	)757-0180	2	1	RESISTOR 31.6 +-1% .125W TF TC=0+-100	19701	SFR25H
A3A8R9	)698-6630	3	1	RESISTOR 20K +-0.1% .125W TF TC=0+-25	19701	5033R
A3A8R10	)698-6630	3	1	RESISTOR 20K +-0.1% .125W TF TC=0+-25	19701	5033R
A3A8R11	1698-6320	8	1	RESISTOR 5K +-0.1% .125W TF TC=0+-25	91637	CMF-55-1, T-9
A3A8R12	)698-6320	a	1	RESISTOR 5K +-0.1% .125W TF TC=0+-25	91637	CMF-55-1, T-9
A3A8R13	)698-6320	8	1	RESISTOR 5K +-0.1% .125W TF TC=0+-25	91637	CMF-55-1, T-9
A3A8R14	1698-6320	8	1	RESISTOR 5K +-0.1% .125W TF TC=0+-25	91637	CMF-55-1, T-9
A3A8R15	1698-6361	7	1	7ESISTOR 8K +-0.1% .125W TF TC=0+-25	19701	5 0 3 3 1
A3A8R16	)698-6320	a	1	RESISTOR 5K +-0.1% .125W TF TE=0+-25	91637	CMF-55-1, T-9
A3A8R17	1698-3152	8	1	RESISTOR 3.48K 1% .125W TF TC=0+-100	19701	SFR25H
A3A8R18	757-0424	7	1	RESISTOR 1.1K +-1% .125W TF TC=0+-100	19701	SFR25H
A3A8R19	698-6360	6	1	RESISTOR 10K +-0.1% .125W TF TC=0+-25	19701	5033R
A3A8R20	698-6323	1	1	RESISTOR 100 +-0.1% .125W TF TC=0+-25	91637	CMF-55-1. T-9
A3A8R21	757-0428	1	1	RESISTOR 1.62K +-1% .125W TF TC=0+-100	19701	SFR25H
A3A8R22	757-0438	3	1	RESISTOR 5.11K +-1% .125W TF TC=D+-100	19701	SFR25H
A3A8R23	757-0438	3	1	RESISTOR 5.11K +-1% .125W TF TC=0+-100	19701	SFR25H
A3A8R24	757-0180	2	1	RESISTOR 31.6 +-1% .125W TF TC=0+-100	19701	SFR25H
A3A8TP1	360-0535	0	1	'ERMINAL-TEST POINT .330IN ABOVE	46819	
A3A8TP2	360-0535	0	1	'ERMINAL-TEST POINT .330IN ABOVE	46819	
A3A8TP3	360-0535	0	1	'ERMINAL-TEST POINT .330IN ABOVE	46819	
A3A8TP4	360-0535	3	1	'ERMINAL-TEST POINT .330IN ABOVE	46819	
A3A8TP5	360-0535	3	1	'ERMINAL-TEST POINT .330IN ABOVE	46819	
A3A8TP6	360-0535	3	1	'ERMINAL-TEST POINT .330IN ABOVE	46819	
A3A8TP7	360-0535	3	1	'ERMINAL-TEST POINT .330IN ABOVE	46819	
A3A8TP8	360-0535	3	1	'ERMI-NAL-TEST POINT .330IN ABOVE	46819	
A3A8TP9	3360-0535	0	1	TERMINAL-TEST POINT .330IN ABOVE	46819	
A3A8TP10	0360-0535	0	1	TERMINAL-TEST POINT .330IN ABOVE	46819	
A3A8TP11	0360-0535	0	1	TERMINAL-TEST POINT .330IN ABOVE	46819	
A3A8U1	1826-0116	2	1	IC COMPARATOR GP TO-99 PKG	06665	CMP-01-CJ
A3A8U2	1826-0471	2	1	IC OP AMP LOW-DRIFT TO-99 PKG	06665	OP-07CJ SELECTED
A3A8U3	1826-0471	2	1	IC OP AMP LOW-DRIFT TO-99 PKG	06665	OP-07CJ SELECTED
A3A8U4	1826-0471	2	1	IC OP AMP LOW-DRIFT TO-99 PKG	06665	OP-07CJ SELECTED
A3A8U5	1826-0684	9	1	)/A 12-BIT 18-CBRZ/SDR CMOS	24355	AD7541BD(SEL)
A3A8U6	1820-1441	6	1	IC AOOR TTL LS BIN FULL ADDR 4-BIT	01295	SN74LS283N
A3A8U7	1820-1144	6	1	IC GATE TTL LS NOR QUAD 2-INP	01295	SN74LS02N
A3A8U8	1820-1199	1	1	!C INV TTL LS HEX 1-INP	01295	SN74LS04N
A3A8U9	1820-1196	B	1	:C FF TTL LS D-TYPE POS-EDGE-TRIG COM CL	01295	SN74LS174N
A3A8U10	1820-1196	B	1	:C FF TTL LS D-TYPE POS-EDGE-TRIG COM CL	01295	SN74LS174N
A3A8U11	1820-1984	2	1	1/A 10-BIT 16-CBRZ/SDR BPLR	24355	AD561KD
A3A8U12	1826-0116	2	1	IC COMPARATOR GP TO-99 PKG	06665	CMP-01-CJ
A3A8U13	1820-1720	4	1	:C RGTR TTL 12-BIT	27014	DM2504CN
A3A8U14	1820-1282	3	1	C FF TTL LS J-K BAR POS-EDGE-TRIG PRESE	01295	SN74LS109AN
A3A8U15	1820-1438	L	1	C MUXR/DATA-SEL TTL LS L-TO-1-LINE QUAD	01295	SN74LS257BN
A3A8U16	1820-1438	L	1	C MUXR/DATA-SEL TTL LS L-TO-1-LINE QUAD	01295	SN74LS257BN

**Indicates factory-selected value*

HP Part Number 85662-60130

A3A8 Analog-Digital Converter

Reference Designation	HP Part Number	CD	Qty	Description	Mfr Code	Mfr Part Number
A3A8U17	1820-1438	1	1	IC MUXR/DATA-SEL TTL LS 2-TO-1-LINE QUAD	01295	SN74LS257BN
A3A8U18	1820-1438	1	1	IC MUXR/DATA-SEL TTL LS P-TO-1-LINE QUAD	01295	SN74LS257BN
A3A8VR1	1902-0686	3	1	DIOOE-ZNR 6.2V 2% DO-7 PD=.4W TC=+.002%	04713	11825

Analyzer Repair Inc.

**Indicates factory-selected value*

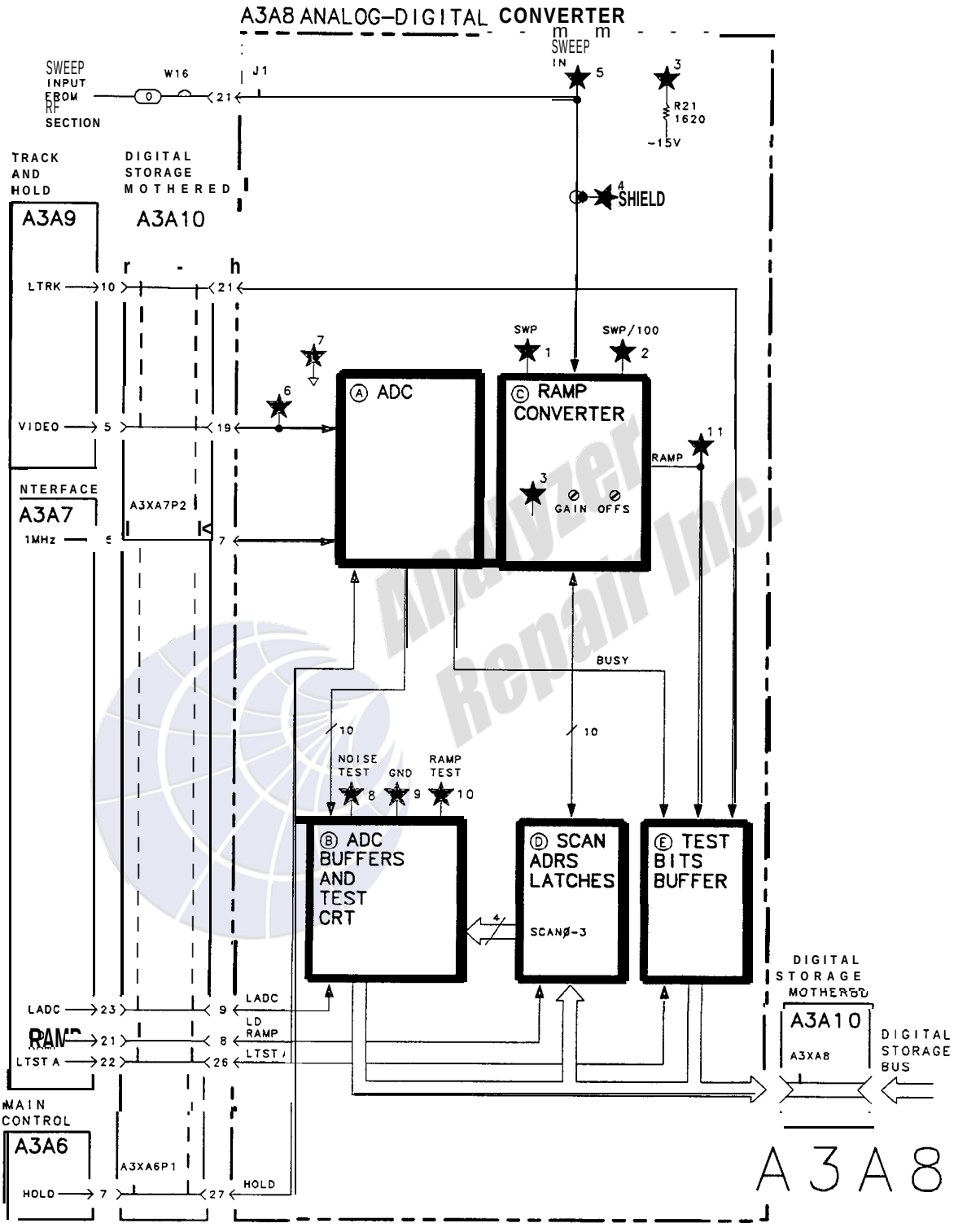

A3A8 Analog-Digital Converter, Block Diagram

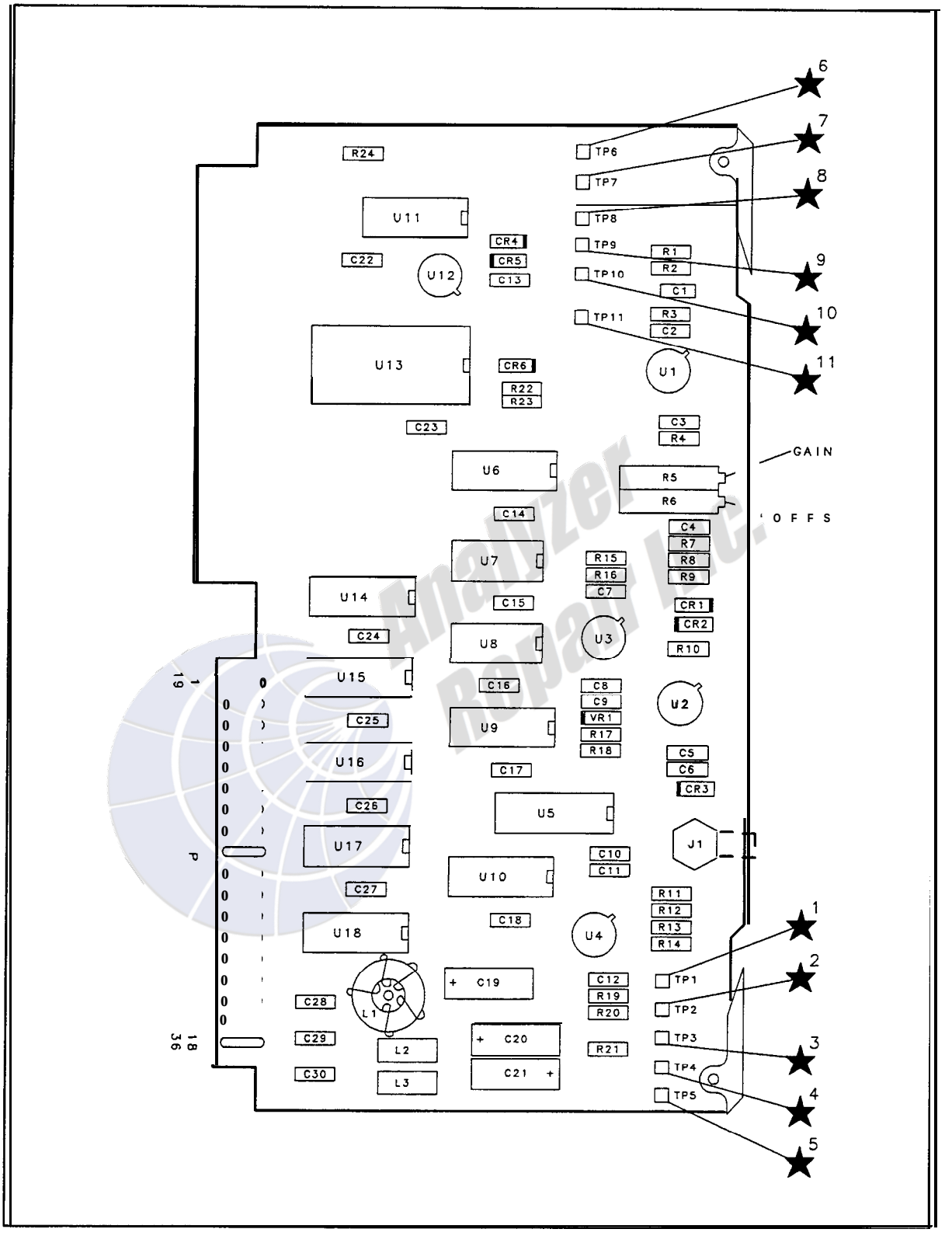

A3A8 Analog-Digital Converter Component Locations, 85662-60130

A3A8 ANALOG DIGITAL CONVERTER
85662-60130
(SERIAL PREFIX: 2403A)

P1

PIN	SIGNAL	TO/FROM	FUNCTION BLOCK
1	ADC GND		G
19	VIDEO	A3A9P1-6	A
2	ADC GND		G
20	ADC GND		G
3	NC		
21	LTRK	A3A9P1-10	B
4	NC		
22	NC		
5	INSEL B		NOT USED
23	NC		
6	INSEL A		NOT USED
24	NC		
7	1MHz	A3A7P2-25	A
25	NC		
8	LD RMP	A3A7P2-21	D
26	LTST A	A3A7P2-22	B
9	LADC	A3A7P2-23	E
27	HOLD	A3A9P1-7	A
10	B$\overline{F}$	DIGITAL STORAGE BUS	E
28	B1		E
11	B2		E
29	B3		E
12	B4		E
30	B5		E
13	B6		E
31	B7		E
14	B8		E
32	B9		E
15	B10		E
33	B11		E
16	DGND		G
34	DGND		G
17	+5V		G
35	AGND		G
18	+15V		G
36	-15V		G

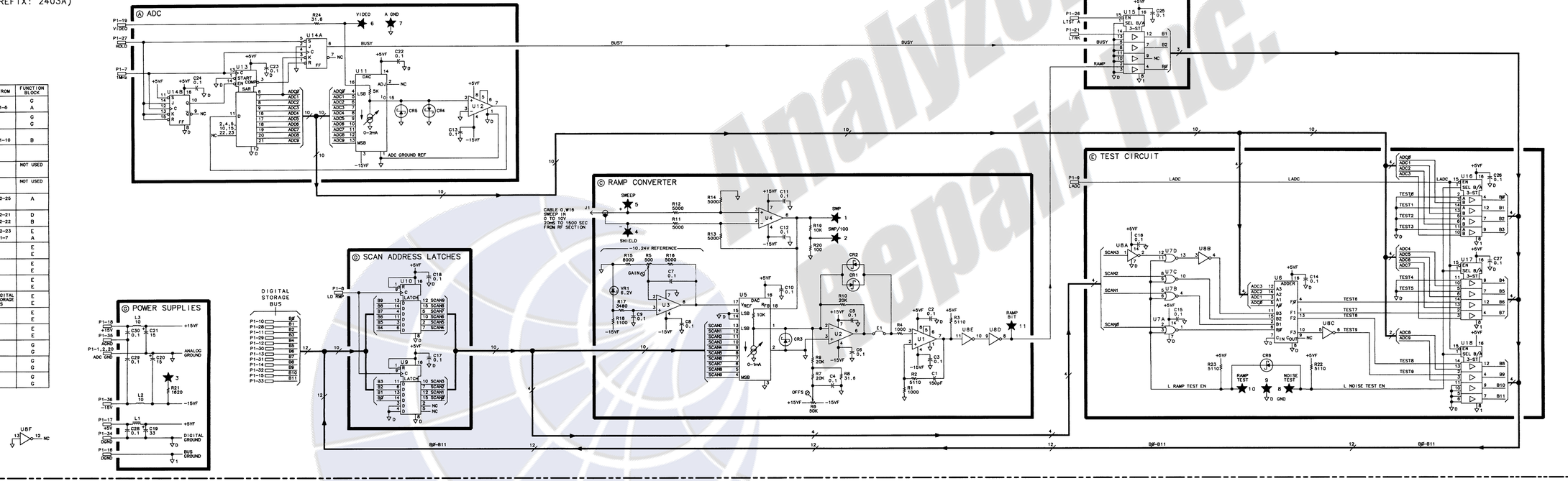

NOTES:

1. REFERENCE DESIGNATORS WITHIN THIS ASSEMBLY ARE ABBREVIATED. FOR COMPLETE REFERENCE DESIGNATION, PREFIX ABBREVIATION WITH ASSEMBLY DESIGNATION.
2. UNLESS OTHERWISE INDICATED: RESISTANCE IS IN OHMS (Ω) CAPACITANCE IS IN MICROFARADS (μF) INDUCTANCE IS IN MICROHENRIES (μH)
3. UNLESS OTHERWISE INDICATED, SIGNALS ENTER AT LEFT SIDE AND EXIT AT RIGHT SIDE OF FUNCTION BLOCKS.
4. MNEMONIC TABLE:

MNEMONIC	DESCRIPTION
LADC	LOADS ADC OUTPUT ONTO DIGITAL STORAGE BUS
AGND	ANALOG GROUND
B$\overline{F}$-B11	DIGITAL STORAGE BUS BITS $\overline{F}$-11
DGND	DIGITAL GROUND
HOLD	HOLD; CONTROLS TRACK/HOLD MODE, INITIATES DATA A/D CONVERSION
LD RMP	LOADS RAMP CONVERTER DAC
LTST A	LOAD TEST BITS ONTO DIGITAL STORAGE BUS
LTRK	LOW-VIDEO TRACKING
COMP	COMPLETE
BUSY	CONVERSION IN PROCESS
RAMP	TIME FOR NEXT CONVERSION

Analyzer Repair Inc.

A3A9

A3A9 Track and Hold, Circuit Description

A3A9 Track and Hold provides circuitry to insure that the true peak of the RF signal and a true representation of noise are displayed on the CRT. This is accomplished by positive and negative peak detection.

Positive Peak Detector Ⓐ

The Positive Peak Detector acquires the most positive voltage to appear at its input and holds that voltage on holding capacitor C26 until the circuit is reset by a reset pulse from the decoding and timing circuits. FET Q6 is periodically turned on by the reset pulse, discharging C26 through R12 and Q6 to ground. Figure 1 shows a simplified schematic of the Positive Peak Detector.

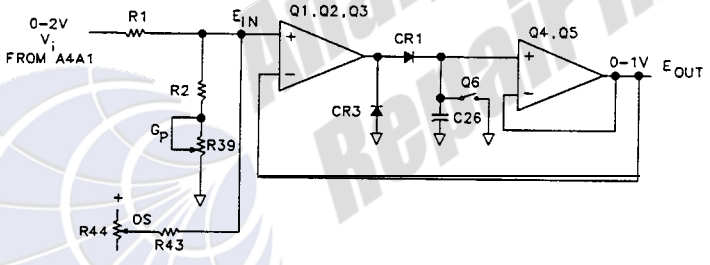

Figure 1. Positive Peak Detector, Simplified Schematic

The circuit consists of amplifier Q3, Q2, Q1, diode CR1, holding capacitor C26, and buffer Q4, Q5. When E_{in} is less than the feedback voltage E_{out}, CR1 is off and C26 will hold the voltage it has acquired. CR3 limits the reverse voltage across CR1 to minimize leakage current. CR1 turns on when E_{in} is greater than E_{out}, and C26 charges to equalize E_{in} and E_{out}.

A pair of matched FETs, Q4A and Q4B, and emitter follower Q5 are used in the buffer circuit. Q4A is used as a source follower and Q4B as a current source. The Q4A bias current is equal to the algebraic sum of the current from Q4B, the base current to Q3B, and the bias current through R13. This sum of currents insures a very small gate-to-source voltage and prevents gate-to-source forward biasing.

Q1, Q2, and Q3 are all dual transistors. Q3 and Q2 form the input stage, with Q3 connected as emitter followers and Q2 forming a differential pair. Gain for the differential stage is set by collector resistor R7. Additional gain is provided by Q1B. Q1B is connected as a transistor inverter with R9 in the emitter and R8 in the collector. Q1A is connected as a diode. Gain and offset adjustments for the Positive Peak Detector are performed in the resistor divider that includes R1 and R2. GPOS potentiometer R39 adjusts the attenuation so that a 2 V full-scale input produces a 1 V full-scale output. OFS POS potentiometer R44 zeroes the

output with 0 V input. U5 compares the input and output of the Peak Detector. A TTL high level is produced when the output is greater than the input. (R40, R41, and R16 provide a small amount of hysteresis for noise immunity.)

Negative Peak Detector Ⓑ

The Negative Peak Detector acquires the most negative voltage to appear at its input and holds that voltage on holding capacitor C38 until reset by a pulse from the decoding and timing circuits. Circuit operation is the same as that of the Positive Peak Detector except that supply polarities are reversed and PNP instead NPN transistors are used. Figure 2 shows a simplified schematic of the Negative Peak Detector.

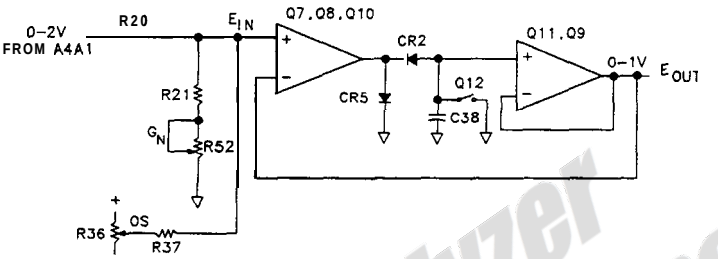

Figure 2. Negative Peak Detector, Simplified Schematic

The circuit consists of amplifier Q7/Q8/Q10, diode CR2, holding capacitor C38, buffer Q11/Q9, and reset transistor Q12. R71 creates an offset between the output and the emitter of Q9. This insures that the voltage across C38 is always negative for positive outputs from 0 V to +1 V. GNEG potentiometer R52 sets the gain (input attenuation) so that a 2 V full-scale input produces a 1 V full-scale output. OFS NEG potentiometer R36 zeroes the offset. U4 compares the input to the output.

Decoding and Timing Ⓒ

The Decoding and Timing circuit provides reset pulses to the Peak Detectors and control lines for Multiplexer selection, and it performs other logic functions.

U9 decodes control lines SEL A and SEL B to produce three lines for Multiplexer selection. After inversion by U8A, U8B, and U8C, the voltage levels are shifted to -0.5 V and +9 V. Multivibrators U12A and U12B produce pulses (when triggered by HOLD) which reset the Peak Detectors. Latches U13A and U13B are used to provide the Peak Detector status signal LTRK.

Multiplexer Ⓓ

The outputs of the Peak Detectors are multiplexed through U1 before sampling by the Track and Hold circuit. Control lines to the Multiplexer are provided by the Decoding and Timing circuit.

Track and Hold Ⓔ

The Track and Hold circuit samples the signal appearing at the output of multiplexer U1 and holds the voltage on capacitor C15. The output of the Track and Hold circuit is used in A3A8 Analog-Digital Converter, where it is converted into Y-axis graph data. A simplified schematic of the Track and Hold circuit is shown in Figure 3.

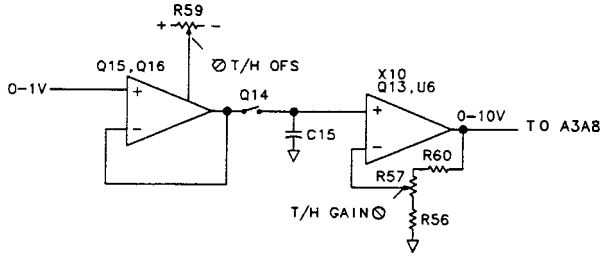

Figure 3. Track and Hold Circuit, Simplified Schematic

Q16 and Q15 form a buffer amplifier. Q14 switches on and off to open or close a path between the amplifier and holding capacitor C15. A FET input amplifier (Q13, US) amplifies the capacitor voltage by a factor of 10. The gain is set the T/H GAIN potentiometer R57. Offset is adjusted by controlling the current flow through R67 with (T/H) OFS potentiometer R59.

Analyzer Repair Inc.

A3A9 Track and Hold, Troubleshooting

Display problems which involve only the video are often caused by malfunctions on either A3A8 Analog-Digital Converter or the A3A9 Track and Hold. The blue [SHIFT] key functions and the Digital Storage Test Patterns can be used to isolate the failure.

Figure 4 shows the Digital Storage Test Pattern. Refer to "A3 Digital Storage Troubleshooting" to generate the test pattern. The three vertical lines represent the detector outputs on A3A9. The left one is the negative peak detector, the center one is the sampling mode and the right one is the positive peak detector. These should move up and down when a VIDEO signal is present at A3A9J1, indicating normal operation. If one is stuck, the blue (SHIFT) key can be used to verify this.

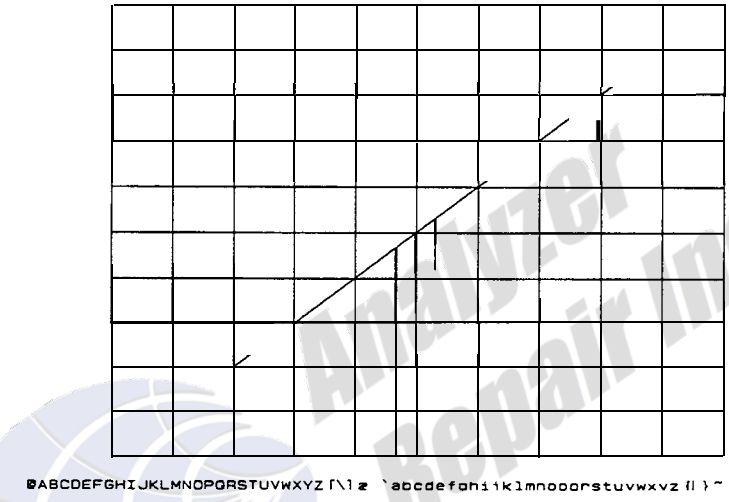

Figure 4. Typical Digital Storage Test Pattern

Slight stair-stepping of the diagonal line could be caused by a low order bit failure on A3A8 or a noisy component on A3A9. To isolate the assemblies remove A3A9, jumper A3A8TP1 to A3A8TP6 and push Instrument Preset. The Display is a diagonal line. If the diagonal line is not stair-stepped or noisy, the problem is on A3A9.

Noise on the peaks of the displayed signals is most often caused by leakage in Q6 or Q14. This is very noticeable in 0 Hz frequency spans. To determine whether Q6 or Q14 is defective, sampling detection is used. (SHIFT) TRACE A [BLANK] (KSe) puts the instrument in the sampling mode. A noisy signal when using the sampling mode generally indicates a defective Q14. A defective Q6 produces noise in the normal detection mode and in the positive peak detection mode, [SHIFT] TRACE A [MAX HOLD] (KSb).

Analyzer Repair inc.

Proper operation of the detectors can be tested with the following sequence.

[CLEAR-WRITE] TRACE B
Instrument Preset
RECALL 8
SHIFT TRACE A MAX HOLD . . . . . Positive Peak Detection
[VIEW) TRACE B

[SHIFT) TRACE A VIEW . . . . . Negative Peak Detection
(both traces coincide)

SHIFT TRACE A BLANK . . . . . Sampling Mode
(both traces coincide)

If the traces do not coincide in the above test, refer to "Track and Hold Adjustments" in the Performance Tests and Adjustments Manual.

If the voltage on A3A9TP8 is correct and that of A3A9TP9 is incorrect when performing the BIAS Check of Note 10 on the schematic, check to see if the drain and source voltages on Q14 are approximately +1 V. If not, Q14 is most likely open.

The LTRK signal is verified using an oscilloscope. Following an Instrument Preset, set the spectrum analyzer sweep time to 75 ms. Figure 5 shows the resultant waveform.

Oscilloscope settings:
Sweeptime: 50 ms/div
Anolyzer Sweeptime: 75 ms

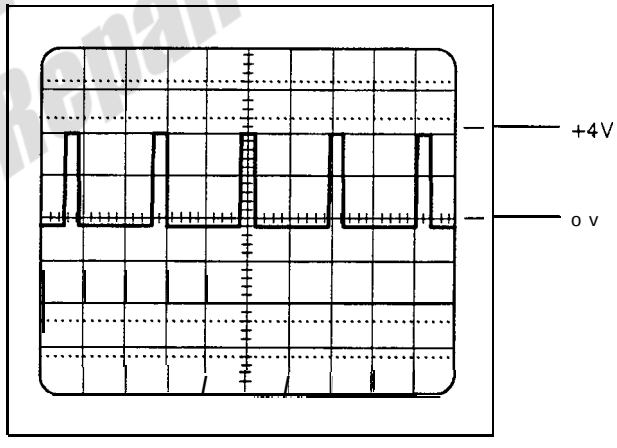

Figure 5. LTRK Timing Waveform

The Decoding and Timing © is checked using an oscilloscope. Figure 6 shows the timing waveforms when using Digital Storage Test Program 5. When Digital Storage Test Program 6 is used, HOLD is normally high. It goes low every 80 ms. The two reset lines are then active only every 80 ms. Figure 5 shows the LTRK line for a sweep time of 75 ms following an Instrument Preset.

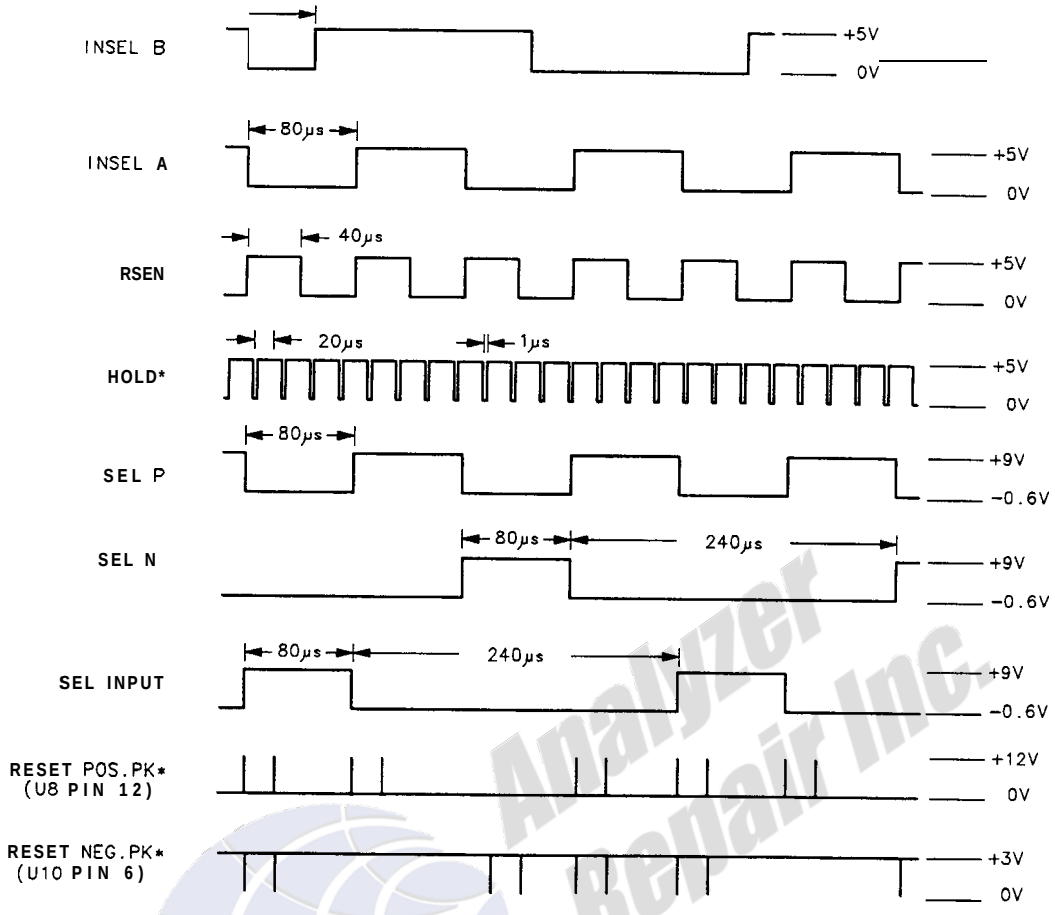

* For Test Program 6, HOLD is normally high, going low only every 80 msec which resets the peak detectors (RESET POS.PK and RESET NEG.PK). All other wave forms remain the same as for Test Program 5.

Figure 6. A3A9 Timing Waveforms Using Digital Storage Test Program 5

Analyzer Repair Inc.

HP Part Number 85662-60151

A3A9 Track and Hold

Reference Designation	HP Part Number	CD	Qty	Description	Mfr Code	Mfr Part Number
A3A9	85662-60151	2	1	BOARD ASSEMBLY TRACK AND HOLD (SERIAL PREFIXES: 2403A-2534A)	28480	85662-60151
A3A9C1	0160-4835	7	1	CAPACITOR-FXD .1UF +-10% 50VDC CER	04222	SA115C104KAAH
A3A9C2	0160-4835	7	1	CAPACITOR-FXD .1UF +-10% 50VDC CER	04222	SA115C104KAAH
A3A9C3	0180-1746	5	1	CAPACITOR-FXD 15UF+-10% ZOVDC TA	56289	150D156X9020B2-DYS
A3A9C4	0180-1746	5	1	CAPACITOR-FXD 15UF+-10% 20VDC TA	56289	150D156X9020B2-DYS
A3A9C7	0180-0229	7	1	CAP-FXD 33uF 10 V TA +-10%	56289	150D336X9010B2-DYS
A3A9C8	0160-4835	7	1	CAPACITOR-FXD .1UF +-10% 50VDC CER	04222	SA115C104KAAH
A3A9C9	0160-4835	7	1	CAPACITOR-FXD .1UF +-10% 50VDC CER	04222	SA115C104KAAH
A3A9C10	0160-4835	7	1	CAPACITOR-FXD .1UF +-10% SOVDC CER	04222	SA115C104KAAH
A3A9C11	0180-0197	8	1	CAPACITOR-FXD 2.2UF+-10% ZOVDC TA	56289	150D225X9020A2-DYS
A3A9C12	0160-4835	7	1	CAPACITOR-FXD .1UF +-10% SOVDC CER	04222	SA115C104KAAH
A3A9C13	0160-4832	4	1	CAPACITOR-FXD .01UF +-10% 100VDC CER	04222	SA101C103KAAH
A3A9C14	0160-4835	7	1	CAPACITOR-FXD .1UF +-10% SOVDC CER	04222	SA115C104KAAH
A3A9C15	0160-3536	3	1	CAPACITOR-FXD 620PF +-5% 100VDC MICA 0+7	09023	CD15FC621J03
A3A9C16	0160-4835	7	1	CAPACITOR-FXD .1UF +-10% 50VDC CER	04222	SA115C104KAAH
A3A9C17	0160-4835	7	1	CAPACITOR-FXD .1UF +-10% SOVDC CER	04222	SA115C104KAAH
A3A9C18	0160-4801	7	1	CAPACITOR-FXD 100PF +-5% 100VDC CER 0+-3	04222	SA102A101JAAH
A3A9C19	0160-4801	7	1	CAPACITOR-FXD 100PF +-5% 100VDC CER 0+-3	04222	SA102A101JAAH
A3A9C20	0160-4835	7	1	CAPACITOR-FXD .1UF +-10% SOVDC CER	04222	SA115C104KAAH
A3A9C21	0160-4835	7	1	CAPACITOR-FXD .1UF +-10% SOVDC CER	04222	SA115C104KAAH
A3A9C22	0160-4835	7	1	CAPACITOR-FXD .1UF +-10% SOVDC CER	04222	SA115C104KAAH
A3A9C23	0160-4832	4	1	CAPACITOR-FXD .01UF +-10% 100VDC CER	04222	SA101C103KAAH
A3A9C24	0160-4835	7	1	CAPACITOR-FXD .1UF +-10% 50VDC CER	04222	SA115C104KAAH
A3A9C25	0160-4835	7	1	CAPACITOR-FXD .1UF +-10% 50VDC CER	04222	SA115C104KAAH
A3A9C26	0160-0945	2	1	CAP-FXD 910pF 100 V MICA +-5%	09023	CD15FA911J03
A3A9C27	0160-4835	7	1	CAPACITOR-FXD .1UF +-10% 50VDC CER	04222	SA115C104KAAH
A3A9C30	0160-4835	7	1	CAPACITOR-FXD .1UF +-10% SOVDC CER	04222	SA115C104KAAH
A3A9C31	0160-4835	7	1	CAPACITOR-FXD .1UF +-10% 50VDC CER	04222	SA115C104KAAH
A3A9C32	0160-4835	7	1	CAPACITOR-FXD .1UF +-10% SOVDC CER	04222	SA115C104KAAH
A3A9C33	0160-4835	7	1	CAPACITOR-FXD .1UF +-10% SOVDC CER	04222	SA115C104KAAH
A3A9C34	0160-4835	7	1	CAPACITOR-FXD .1UF +-10% 50VDC CER	04222	SA115C104KAAH
A3A9C35	0160-4835	7	1	CAPACITOR-FXD .1UF +-10% SOVDC CER	04222	SA115C104KAAH
A3A9C36	0160-4835	7	1	CAPACITOR-FXD .1UF +-10% 50VDC CER	04222	SA115C104KAAH
A3A9C37	0160-4835	7	1	CAPACITOR-FXD .1UF +-10% SOVDC CER	04222	SA115C104KAAH
A3A9C38	0160-0945	2	1	CAP-FXD 910pF 100 V MICA +-5%	09023	CD15FA911J03
A3A9C39	0160-4832	4	1	CAPACITOR-FXD .01UF +-10% 100VDC CER	04222	SA101C103KAAH
A3A9C40	0160-4835	7	1	CAPACITOR-FXD .1UF +-10% 50VDC CER	04222	SA115C104KAAH
A3A9C41	0160-4835	7	1	CAPACITOR-FXD .1UF +-10% 50VDC CER	04222	SA115C104KAAH
A3A9C42	0160-4812	0	1	CAP-FXD 220pF 100 V +-5%	04222	SA101A221JAAH
A3A9C43	0160-4808	4	1	ZAPACITOR-FXD 470PF +-5% 100VDC CER 0+-3	04222	SA101A471JAAH
A3A9C44	0160-4801	7	1	CAPACITOR-FXD 100PF +-5% 100VDC CER 0+-3	04222	SA102A101JAAH
A3A9C45	0160-4832	4	1	ZAPACITOR-FXD .01UF +-10% 100VDC CER	04222	SA101C103KAAH
A3A9C46	0160-4835	7	1	CAPACITOR-FXD.1UF +-10% 50VDC CER	04222	SA115C104KAAH
A3A9C47	0160-4835	7	1	"APACITOR-FXD .1UF +-10% SOVDC CER	04222	SA115C104KAAH
A3A9C48	0180-1746	5	1	CAPACITOR-FXD 15UF+-10% ZOVDC TA	56289	150D156X9020B2-DYS
A3A9C49	0180-1746	5	1	ZAPACITOR-FXD 15UF+-10% ZOVDC TA	56289	150D156X9020B2-DYS

**Indicates factory-selected value*

HP Part Number 85662-60151

A3A9 Track and Hold

Reference Designatior	HP Part Number	C. D	Qty	Description	Mfr Code	Mfr Part Number
A3A9C50	0160-4835	7	1	CAPACITOR-FXD .1UF +-10% SOVDC CER	04222	SA115C104KAAH
A3A9C51	0160-4835	I	1	CAPACITOR-FXD .1UF +-10% SOVDC CER	04222	SA115C104KAAH
A3A9C52	0160-4835	7	1	CAPACITOR-FXD .1UF +-10% SOVDC CER	04222	SA115C104KAAH
A3A9C53	0160-4835	7	1	CAPACITOR-FXD .1UF +-10% 50VDC CER	04222	SA115C104KAAH
A3A9C54	0160-4835	7	1	CAPACITOR-FXD .1UF +-10% SOVDC CER	04222	SA115C104KAAH
A3A9C55	0160-4835	7	1	CAPACITOR-FXD .1UF +-10% SOVDC CER	04222	SA115C104KAAH
A3A9CR1	1901-0376	6	1	DIODE-GEN PRP 35V 50MA DO-35	9N171	1N3595
A3A9CR2	1901-0376	6	1	DIODE-GEN PRP 35V 50MA DO-35	9N171	1N3595
A3A9CR3	1901-0535	9	1	DIODE-SCHOTTKY SM SIG		
A3A9CR4	1901-0033	2	1	DIODE-GEN PRP 180V 200MA DO-35	9N171	1N645
A3A9CR5	1901-0535	9	1	DIODE-SCHOTTKY SM SIG		
A3A9J1	1250-0543	8	1	CONNECTOR-RF SM-SNP M PC 50-OHM	98291	51-053-0349-BE8
A3A9J2	1250-0543	8	1	CONNECTOR-RF SM-SNP M PC 50-OHM	98291	51-053-0349-BE8
A3A9L1	9140-0096	1	1	INDUCTOR RF-CH-MLD 1UH +-10% .166D-INX.3	99800	1537-12
A3A9L2	9100-1629	4	1	INDUCTOR RF-CH-MLD 47UH +-5% .166D-INX.3	99800	1537-60
A3A9L3	9100-1629	4	1	INDUCTOR RF-CH-MLD 47UH +-5% .166D-INX.3	99800	1537-60
A3A9L4	9140-0210	1	1	INDUCTOR RF-CH-MLD 100UH +-5% .166D-INX.	99800	1537-76
A3A9L5	9100-1629	4	1	INDUCTOR RF-CH-MLD 47UH +-5% .166D-INX.3	99800	1537-60
A3A9L6	9100-1629	4	1	INDUCTOR RF-CH-MLD 47UH +-5% .166D-INX.3	99800	1537-60
A3A9MP1	1480-0073	6	2	PIN-ROLL .062-IN-DIA .25-IN-LG BE-CU	72962	99-012-062-0250
A3A9MP2	4040-0756	3	2	EXTR PC BD WHT	28480	4040-0756
A3A9Q1	1853-0075	9	1	TRANSISTOR-DUAL PNP PD=400MW	04713	
A3A9Q2	1854-0712	3	1	TRANSISTOR-DUAL NPN PD=1.8W	06665	MAT-01GH
A3A9Q3	1854-0712	3	1	TRANSISTOR-DUAL NPN PD=1.8W	06665	MAT-01GH
A3A9Q4	1855-0050	4	1	TRANSISTOR-JFET DUAL N-CHAN D-MODE SI PD	34677	
A3A9Q5	1854-0019	3	1	TRANSISTOR NPN SI TO-18 PD=360MW	04713	
A3A9Q6	1855-0241	5	1	TRANSISTOR MOSFET N-CHAN E-MODE TO-72 SI		
A3A9Q7	1853-0316	1	1	TRANSISTOR-DUAL PNP PD=500MW	28480	1853-0316
A3A9Q8	1853-0075	9	1	TRANSISTOR-DUAL PNP PD=400MW	28480	1853-0075
A3A9Q9	1853-0034	D	1	TRANSISTOR PNP SI TO-18 PD=360MW	04713	
A3A9Q10	1854-0475	5	1	TRANSISTOR-DUAL NPN PD=750MW	28480	1854-0475
A3A9Q11	1855-0050	4	1	TRANSISTOR-JFET DUAL N-CHAN D-MODE SI PD	34677	
A3A9Q12	1853-0322	3	1	TRANSISTOR PNP 2N2946A SI TO-46 PD=400MW	04713	
A3A9Q13	1855-0050	4	1	TRANSISTOR-JFET DUAL N-CHAN D-MODE SI PD	34677	
A3A9Q14	1855-0241	5	1	TRANSISTOR MOSFET N-CHAN E-MODE TO-72 SI		
A3A9Q15	1854-0404	D	1	TRANSISTOR NPN SI TO-18 PD=360MW	04713	
A3A9Q16	1854-0475	5	1	TRANSISTOR-DUAL NPN PD=750MW	28480	1854-0475
A3A9R1	3698-6377	5	1	RESISTOR 200 +-0.1% .125W TF TC=0+-25	91637	CMF-55-1. T-9
A3A9R2	1698-6377	5	1	RESISTOR 200 +-0.1% .125W TF TC=0+-25	91637	CMF-55-1. T-9
A3A9R3	0757-0442	3	1	RESISTOR 10K +-1% .125W TF TC=0+-100	19701	SFR25H
A3A9R4	0757-0438	3	1	RESISTOR 5.11K +-1% .125W TF TC=0+-100	19701	SFR25H
A3A9R5	0757-0442	3	1	RESISTOR 10K +-1% .125W TF TC=0+-100	19701	SFR25H
A3A9R6	1757-0280	3	1	RESISTOR 1K +-1% .125W TF TC=0+-100	19701	SFR25H
A3A9R7	0757-0274	8	1	RESISTOR 1.21K +-1% .125W TF TC=0+-100	19701	SFR25H
A3A9R8	0698-0083	3	1	RESISTOR 1.96K 1% .125W TF TC=0+-100	19701	SFR25H
A3A9R9	0698-3440	7	1	RESISTOR 196 1% .125W TF TC=0+-100	19701	SFR25H
A3A9R10	0757-0442	3	1	RESISTOR 10K +-1% .125W TF TC=0+-100	19701	SFR25H
A3A9R11	0757-0442	3	1	RESISTOR 10K +-1% .125W TF TC=0+-100	19701	SFR25H

**Indicates factory-selected value*

HP Part Number 85662-60151

A3A9 Track and Hold

Reference Designation	HP Part Number	C. D	Qty	Description	Mfr Code	Mfr Part Number
A3A9R12	0757-0346	2	1	RESISTOR 10 +-1% .125W TF TC=0+-100	91637	CMF-55-1. T-l
A3A9R13	0757-0465	6	1	RESISTOR 100K +-1% .125W TF TC=0+-100	19701	SFR25H
A3A9R14	0757-0279	0	1	RESISTOR 3.16K +-1% .125W TF TC=0+-100	19701	SFR25H
A3A9R15	0698-3157	3	1	RESISTOR 19.6K 1% .125W TF TC=0+-100	19701	SFR25H
A3A9R16	0698-3157	3	1	RESISTOR 19.6K 1% .125W TF TC=0+-100	19701	SFR25H
A3A9R17	0698-6377	5	1	RESISTOR 200 +-0.1% .125W TF TC=0+-25	91637	CMF-55-1. T-9
A3A9R18	0698-6377	5	1	RESISTOR 200 +-0.1% .125W TF TC=0+-25	91637	CMF-55-1, T-9
A3A9R20	0698-6377	5	1	RESISTOR 200 +-0.1% .125W TF TC=0+-25	91637	CMF-55-1. T-9
A3A9R21	0698-6377	5	1	RESISTOR 200 +-0.1% .125W TF TC=0+-25	91637	CMF-55-1. T-9
A3A9R22	0757-0442	9	1	RESISTOR 10K +-1% .125W TF TC=0+-100	19701	SFR25H
A3A9R23	0757-0438	3	1	RESISTOR 5.11K +-1% .125W TF TC=0+-100	19701	SFR25H
A3A9R24	0757-0442	9	1	RESISTOR 10K +-1% .125W TF TC=0+-100	19701	SFR25H
A3A9R25	0757-0280	3	1	RESISTOR 1K +-1% .125W TF TC=0+-100	19701	SFR25H
A3A9R26	0757-0274	5	1	RESISTOR 1.21K +-1% .125W TF TC=0+-100	19701	SFR25H
A3A9R27	0757-0438	3	1	RESISTOR 5.11K +-1% .125W TF TC=0+-100	19701	SFR25H
A3A9R28	0757-0416	7	1	RESISTOR 511 +-1% .125W TF TC=0+-100	19701	SFR25H
A3A9R29	0698-3157	3	1	RESISTOR 19.6K 1% .125W TF TC=0+-100	19701	SFR25H
A3A9R30	0698-3157	3	1	RESISTOR 19.6K 1% .125W TF TC=0+-100	19701	SFR25H
A3A9R31	0757-0401	0	1	RESISTOR 100 +-1% .125W TF TC=0+-100	19701	SFR25H
A3A9R32	0757-0279	0	1	RESISTOR 3.16K +-1% .125W TF TC=0+-100	19701	SFR25H
A3A9R33	0698-3157	3	1	RESISTOR 19.6K 1% .125W TF TC=0+-100	19701	SFR25H
A3A9R34	0698-0084	9	1	RESISTOR 2.15K 1% .125W TF TC=0+-100	19701	SFR25H
A3A9R35	0757-0279	0	1	RESISTOR 3.16K +-1% .125W TF TC=0+-100	19701	SFR25H
A3A9R36	2100-3161	6	1	RESISTOR-TRMR 20K 10% TKF SIDE-ADJ 17-TR	73138	89PR20K
A3A9R37	0757-0462	3	1	RESISTOR 75K +-1% .125W TF TC=0+-100	19701	SFR25H
A3A9R38	0698-6323	1	1	RESISTOR 100 +-0.1% .125W TF TC=0+-25	91637	CMF-55-1. T-9
A3A9R39	2100-3164	9	1	RESISTOR-TRMR 10 20% TKF SIDE-ADJ 17-TRN	73138	89PR10
A3A9R40	0698-3136	8	1	RESISTOR 17.8K 1% .125W TF TC=0+-100	19701	SFR25H
A3A9R41	0757-0401	0	1	RESISTOR 100 +-1% .125W TF TC=0+-100	19701	SFR25H
A3A9R42	0757-0401	0	1	RESISTOR 100 +-1% .125W TF TC=0+-100	19701	SFR25H
A3A9R43	0757-0462	3	1	RESISTOR 75K +-1% .125W TF TC=0+-100	19701	SFR25H
A3A9R44	2100-3161	6	1	RESISTOR-TRMR 20K 10% TKF SIDE-ADJ 17-TR	73138	89PR20K
A3A9R45	0698-6323	1	1	RESISTOR 100 +-0.1% .125W TF TC=0+-25	91637	CMF-55-1, T-9
A3A9R46	0698-3136	8	1	RESISTOR 17.8K 1% .125W TF TC=0+-100	19701	SFR25H
A3A9R47	0698-6320	8	1	RESISTOR 5K +-0.1% .125W TF TC=0+-25	91637	CMF-55-1. T-9
A3A9R48	0757-0289	2	1	RESISTOR 13.3K +-1% .125W TF TC=0+-100	19701	SFR25H
A3A9R49	0757-0440	7	1	RESISTOR 7.5K +-1% .125W TF TC=0+-100	19701	SFR25H
A3A9R50	0757-1094	9	1	RESISTOR 1.47K +-1% .125W TF TC=0+-100	19701	SFR25H
A3A9R51	0757-0280	3	1	RESISTOR 1K +-1% .125W TF TC=0+-100	19701	SFR25H
A3A9R52	2100-3164	9	1	RESISTOR-TRMR 10 20% TKF SIDE-ADJ 17-TRN	73138	89PR10
A3A9R53	0698-0085	0	1	RESISTOR 2.61K 1% .125W TF TC=0+-100	19701	SFR25H
A3A9R54	0698-3157	3	1	RESISTOR 19.6K 1% .125W TF TC=0+-100	19701	SFR25H
A3A9R55	0698-3157	3	1	RESISTOR 19.6K 1% .125W TF TC=0+-100	19701	SFR25H
A3A9R56	0698-8298	3	1	RESISTOR 1.071K +-0.25% .125W TF TC=0+-2	19701	5033R
A3A9R57	2100-3757	6	1	RESISTOR-TRMR 100 10% TKF SIDE-ADJ 17-TR	73138	67XR
A3A9R58	0698-3451	0	1	RESISTOR 133K 1% .125W TF TC=0+-100	19701	SFR25H
A3A9R59	2100-3750	9	1	RESISTOR-TRMR 20K 10% TKF SIDE-ADJ 17-TR	73138	67XR

**Indicates factory-selected value*

HP Part Number 85662-60151

A3A9 Track and Hold

Reference Designation	HP Part Number	CD	Qty	Description	Mfr Code	Mfr Part Number
A3A9R60	0699-1024	1	1	RESISTOR 10K +-0.01% .125W TF TC=0+-10		PR1/8
A3A9R61	0757-0441	8	1	RESISTOR 8.25K +-1% .125W TF TC=0+-100	19701	SFR25H
A3A9R62	0757-0346	2	1	RESISTOR 10 +-1% .125W TF TC=0+-100	91637	CMF-55-1. T-l
A3A9R63	0757-0346	2	1	RESISTOR 10 +-1% .125W TF TC=0+-100	91637	CMF-55-1, T-l
A3A9R64	0757-0279	0	1	RESISTOR 3.16K +-1% .125W TF TC=0+-100	19701	SFR25H
A3A9R65	0757-0280	3	1	RESISTOR 1K +-1% .125W TF TC=0+-100	19701	SFR25H
A3A9R67	0757-0416	7	1	RESISTOR 511 +-1% .125W TF TC=0+-100	19701	SFR25H
A3A9R68	0698-8872	9	1	RESISTOR 532 +-0.25% .125W TF TC=0+-100	K8479	H8
A3A9R69	0757-0442	9	1	RESISTOR 10K +-1% .125W TF TC=0+-100	19701	SFR25H
A3A9R70	0757-0280	3	1	RESISTOR 1K +-1% .125W TF TC=0+-100	19701	SFR25H
A3A9R72	0757-0438	3	1	RESISTOR 5.11K +-1% .125W TF TC=0+-100	19701	SFR25H
A3A9R73	0757-0280	3	1	RESISTOR 1K +-1% .125W TF TC=0+-100	19701	SFR25H
A3A9R74	0757-0442	9	1	RESISTOR 10K +-1% .125W TF TC=0+-100	19701	SFR25H
A3A9R75	0698-6323	1	1	RESISTOR 100 +-0.1% .125W TF TC=0+-25	91637	CMF-55-1. T-9
A3A9R76	0698-3156	2	1	RESISTOR 14.7K 1% .125W TF TC=0+-100	19701	SFR25H
A3A9R77	0757-0280	3	1	RESISTOR 1K +-1% .125W TF TC=0+-100	19701	SFR25H
A3A9R78	0698-3156	2	1	RESISTOR 14.7K 1% .125W TF TC=0+-100	19701	SFR25H
A3A9R79	0757-0280	3	1	RESISTOR 1K +-1% .125W TF TC=0+-100	19701	SFR25H
A3A9R80	0698-3156	2	1	RESISTOR 14.7K 1% .125W TF TC=0+-100	19701	SFR25H
A3A9R81	0757-0280	3	1	RESISTOR 1K +-1% .125W TF TC=0+-100	19701	SFR25H
A3A9R82	0698-3156	2	1	RESISTOR 14.7K 1% .125W TF TC=0+-100	19701	SFR25H
A3A9R83	0757-0280	3	1	RESISTOR 1K +-1% .125W TF TC=0+-100	19701	SFR25H
A3A9R84	0698-3156	2	1	RESISTOR 14.7K 1% .125W TF TC=0+-100	19701	SFR25H
A3A9R85	0757-0280	3	1	RESISTOR 1K +-1% .125W TF TC=0+-100	19701	SFR25H
A3A9R86	0698-3150	6	1	RESISTOR 2.37K 1% .125W TF TC=0+-100	19701	SFR25H
A3A9R87	0698-3150	6	1	RESISTOR 2.37K 1% .125W TF TC=0+-100	19701	SFR25H
A3A9R88	0698-3150	6	1	RESISTOR 2.37K 1% .125W TF TC=0+-100	19701	SFR25H
A3A9R89	0698-3150	6	1	RESISTOR 2.37K 1% .125W TF TC=0+-100	19701	SFR25H
A3A9R90	0698-3150	6	1	RESISTOR 2.371: 1% .125W TF TC=0+-100	19701	SFR25H
A3A9TP1	0360-0535	0	1	TERMINAL-TEST POINT .330IN ABOVE	46819	
A3A9TP2	0360-0535	0	1	TERMINAL-TEST POINT .330IN ABOVE	46819	
A3A9TP3	0360-0535	0	1	TERMINAL-TEST POINT .330IN ABOVE	46819	
A3A9TP9	0360-0535	0	1	TERMINAL-TEST POINT .330IN ABOVE	46819	
A3A9U1	1826-0415	4	1	ANALOG MULTIPLEXER 4 CHNL 16 -DIP-P		SD5000N
A3A9U4	1826-0026	3	1	IC COMPARATOR PRCN TO-99 PKG	27014	LM311H
A3A9U5	1826-0026	3	1	IC COMPARATOR PRCN TO-99 PKG	27014	LM311H
A3A9U6	1826-0089	8	1	IC OP AMP WB TO-99 PKG	34371	HA2-2525-5 (SELECTED)
A3A9U8	1820-0471	0	1	IC INV TTL HEX 1-INP	01295	SN7406N
A3A9U9	1820-1281	2	1	IC OCOR TTL LS 2-TO-4-LINE DUAL	01295	SN74LS139AN
A3A9U10	1820-1202	7	1	IC GATE TTL LS NAND TPL 3-INP	01295	SN74LS10N
A3A9U11	1820-1197	9	1	IC GATE TTL LS NAND QUAD 2-INP	01295	SN74LS00N
A3A9U12	1820-1423	4	1	IC MV TTL LS MONOSTBL RETRIG DUAL	01295	SN74LS123N
A3A9U13	1820-1112	8	1	IC FF TTL LS O-TYPE POS-EDGE-TRIG PRESET	01295	SN74LS74AN
A3A9U14	1826-0601	0	1	IC OP AMP PRCN TO-99 PKG	06665	OP-16FJ
A3A9U15	1826-0601	0	1	IC OP AMP PRCN TO-99 PKG	06665	OP-16FJ

**Indicates factory-selected value*

HP Part Number 85662-60165

A3A9 Track and Hold

Reference Designation	HP Part Number	CD	Qty	Description	Mfr Code	Mfr Part Number
A3A9	85662-60165	8	1	BOARD ASSEMBLY, TRACK AND HOLD (SERIAL PREFIX: 2541A)	28480	85662-60165
A3A9C1	0160-4835	7	1	CAPACITOR-FXD .1UF +-10% 50VDC CER	04222	SA115C104KAAH
A3A9C2	0160-4835	7	1	CAPACITOR-FXD .1UF +-10% SOVDC CER	04222	SA115C104KAAH
A3A9C3	0180-1746	5	1	CAPACITOR-FXD 15UF+-10% 20VOC TA	56289	150D156X9020B2-DYS
A3A9C4	0180-1746	5	1	CAPACITOR-FXD 15UF+-10% 20VDC TA	56289	150D156X9020B2-DYS
A3A9C7	0180-0229	7	1	CAP-FXD 33uF 10 V TA	56289	150D336X9010B2-DYS
A3A9C8	0160-4835	7	1	CAPACITOR-FXD .1UF +-10% SOVDC CER	04222	SA115C104KAAH
A3A9C9	0160-4835	7	1	CAPACITOR-FXD .1UF +-10% 50VDC CER	04222	SA115C104KAAH
A3A9C10	0160-4835	7	1	CAPACITOR-FXD .1UF +-10% 50VDC CER	04222	SA115C104KAAH
A3A9C11	0180-0197	8	1	CAPACITOR-FXD 2.2UF+-10% 20VOC TA	56289	150D225X9020A2-DYS
A3A9C12	0160-4835	7	1	CAPACITOR-FXD .1UF +-10% 50VDC CER	04222	SA115C104KAAH
A3A9C13	0160-4832	4	1	CAPACITOR-FXD .01UF +-10% 100VDC CER	04222	SA101C103KAAH
A3A9C14	0160-4835	7	1	CAPACITOR-FXD .1UF +-10% 50VDC CER	04222	SA115C104KAAH
A3A9C15	0160-3536	3	1	CAPACITOR-FXD 620PF +-5% 100VDC MICA 0+7	09023	CD15FC621J03
A3A9C16	0160-4835	7	1	CAPACITOR-FXD .1UF +-10% 50VDC CER	04222	SA115C104KAAH
A3A9C17	0160-4835	7	1	CAPACITOR-FXD .1UF +-10% SOVDC CER	04222	SA115C104KAAH
A3A9C18	0160-4801	7	1	CAPACITOR-FXO 100PF +-5% 100VDC CER O+-3	04222	SA102A101JAAH
A3A9C19	0160-4801	7	1	CAPACITOR-FXO 100PF +-5% 100VDC CER O+-3	04222	SA102A101JAAH
A3A9C20	0160-4835	7	1	CAPACITOR-FXD .1UF +-10% 50VDC CER	04222	SA115C104KAAH
A3A9C21	0160-4835	7	1	CAPACITOR-FXD .1UF +-10% 50VDC CER	04222	SA115C104KAAH
A3A9C22	0160-4835	7	1	CAPACITOR-FXD .1UF +-10% 50VDC CER	04222	SA115C104KAAH
A3A9C23	0160-4832	4	1	CAPACITOR-FXD .01UF +-10% 100VDC CER	04222	SA101C103KAAH
A3A9C24	0160-4835	7	1	CAPACITOR-FXO .1UF +-10% 50VDC CER	04222	SA115C104KAAH
A3A9C25	0160-4835	7	1	CAPACITOR-FXD .1UF +-10% SOVDC CER	04222	SA115C104KAAH
A3A9C26	0160-0945	2	1	CAP-FXD 910pF 100 V MICA	09023	CD15FA911J03
A3A9C27	0160-4835	7	1	CAPACITOR-FXD .1UF +-10% 50VOC CER	04222	SA115C104KAAH
A3A9C30	0160-4835	7	1	CAPACITOR-FXD .1UF +-10% 50VDC CER	04222	SA115C104KAAH
A3A9C31	0160-4835	7	1	CAPACITOR-FXD .1UF +-10% 50VOC CER	04222	SA115C104KAAH
A3A9C32	0160-4835	7	1	CAPACITOR-FXD .1UF +-10% 50VDC CER	04222	SA115C104KAAH
A3A9C33	0160-4835	7	1	CAPACITOR-FXD .1UF +-10% 50VDC CER	04222	SA115C104KAAH
A3A9C34	0160-4835	7	1	CAPACITOR-FXD .1UF +-10% SOVDC CER	04222	SA115C104KAAH
A3A9C35	0160-4835	7	1	CAPACITOR-FXD .1UF +-10% 50VDC CER	04222	SA115C104KAAH
A3A9C36	0160-4835	7	1	CAPACITOR-FXD .1UF +-10% 50VDC CER	04222	SA115C104KAAH
A3A9C37	0160-4835	7	1	CAPACITOR-FXD .1UF +-10% 50VDC CER	04222	SA115C104KAAH
A3A9C38	0160-0945	2	1	CAP-FXD 910pF 100 V MICA	09023	CD15FA911J03
A3A9C39	0160-4832	4	1	CAPACITOR-FXD .01UF +-10% 100VDC CER	04222	SA101C103KAAH
A3A9C40	0160-4835	7	1	CAPACITOR-FXD .1UF +-10% 50VDC CER	04222	SA115C104KAAH
A3A9C41	0160-4835	7	1	CAPACITOR-FXD .1UF +-10% 50VOC CER	04222	SA115C104KAAH
A3A9C42	0160-4812	0	1	CAP-FXO 220pF 100 V	04222	SA101A221JAAH
A3A9C43	0160-4808	4	1	CAPACITOR-FXD 470PF +-5% 100VDC CER O+-3	04222	SA101A471JAAH
A3A9C44	0160-4801	7	1	CAPACITOR-FXD 100PF +-5% 100VDC CER O+-3	04222	SA102A101JAAH
A3A9C45	0160-4832	4	1	CAPACITOR-FXD .01UF +-10% 100VDC CER	04222	SA101C103KAAH
A3A9C46	0160-4835	7	1	CAPACITOR-FXO .1UF +-10% 50VDC CER	04222	SA115C104KAAH
A3A9C47	3160-4835	7	1	CAPACITOR-FXD .1UF +-10% SOVDC CER	04222	SA115C104KAAH
A3A9C48	3180-1746	5	1	CAPACITOR-FXD 15UF+-10% 20VDC TA	56289	150D156X9020B2-DYS
A3A9C49	0180-1746	5	1	CAPACITOR-FXO 15UF+-10% 20VDC TA	56289	150D156X9020B2-DYS

**Indicates facto y-selected value*

HP Part Number 85662-60165

A3A9 Track and Hold

Reference Designation	HP Part Number	C.D	Qty	Description	Mfr Code	Mfr Part Number
A3A9C50	0160-4835	7	1	CAPACITOR-FXO .1UF +-10% 50VDC CER	04222	SA115C104KAAH
A3A9C51	0160-4835	7	1	CAPACITOR-FXD .1UF +-10% 50VDC CER	04222	SA115C104KAAH
A3A9C52	0160-4835	7	1	CAPACITOR-FXD .1UF +-10% 50VDC CER	04222	SA115C104KAAH
A3A9C53	0160-4835	7	1	CAPACITOR-FXD .1UF +-10% 50VDC CER	04222	SA115C104KAAH
A3A9C54	0160-4835	7	1	CAPACITOR-FXD .1UF +-10% 50VDC CER	04222	SA115C104KAAH
A3A9C55	0160-4835	7	1	CAPACITOR-FXO .1UF +-10% 50VDC CER	04222	SA115C104KAAH
A3A9C56	0160-4786	7	1	CAP-FXD 27pF 100 V	04222	SA102A270JAAH
A3A9CR1	1901-0376	6	1	DIODE-GEN PRP 35V 50MA DO-35	9N171	1N3595
A3A9CR2	1901-0376	6	1	DIODE-GEN PRP 35V 50MA DO-35	9N171	1N3595
A3A9CR3	1901-0535	9	1	DIODE-SCHOTTKY SM SIG		
A3A9CR4	1901-0033	2	1	DIODE-GEN PRP 180V 200MA DO-35	9N171	1N645
A3A9CR5	1901-0535	9	1	DIODE-SCHOTTKY SM SIG		
A3A9J1	1250-0543	8	1	CONNECTOR-RF SM-SNP M PC 50-OHM	98291	51-053-0349-BE8
A3A9J2	1250-0543	8	1	CONNECTOR-RF SM-SNP M PC 50-OHM	98291	51-053-0349-BE8
A3A9L1	9140-0096	1	1	INDUCTOR RF-CH-MLD 1UH +-10% .166D-INX.3	99800	1537-12
A3A9L2	9100-1629	4	1	INDUCTOR RF-CH-MLD 47UH +-5% .166D-INX.3	99800	1537-60
A3A9L3	9100-1629	4	1	INDUCTOR RF-CH-MLD 47UH +-5% .166D-INX.3	99800	1537-60
A3A9L4	9140-0210	1	1	INDUCTOR RF-CH-MLD 100UH +-5% .166D-INX.	99800	1537-76
A3A9L5	9100-1629	4	1	INDUCTOR RF-CH-MLD 47UH +-5% .166D-INX.3	99800	1537-60
A3A9L6	9100-1629	4	1	INDUCTOR RF-CH-ML0 47UH +-5% .166D-INX.3	99800	1537-60
A3A9MP1	1480-0073	6	2	PIN-ROLL .062-IN-DIA .25-IN-LG BE-CU	72962	99-012-062-0250
A3A9MP2	4040-0756	3	2	EXTR-PC BD WHT POLYC .062-IN-BD-THKNS 1-		
A3A9Q1	1853-0075	9	1	TRANSISTOR-DUAL PNP PD=400MW	04713	
A3A9Q2	1854-0712	3	1	TRANSISTOR-DUAL NPN PD=1.8W	06665	MAT-01GH
A3A9Q3	1854-0712	3	1	TRANSISTOR-DUAL NPN PD=1.8W	06665	MAT-01GH
A3A9Q4	1855-0050	4	1	TRANSISTOR-JFET DUAL N-CHAN D-MODE SI PD	34677	
A3A9Q5	1854-0019	3	1	TRANSISTOR NPN SI TO-18 PD=360MW	04713	
A3A9Q6	1855-0241	5	1	TRANSISTOR MOSFET N-CHAN E-MODE TO-72 SI		
A3A9Q7	1853-0594	7	1	TRANSISTOR-DUAL PNP 2N3808 PD=600MW	04713	213808
A3A9Q8	1853-0594	7	1	TRANSISTOR-DUAL PNP 213808 PD=600MW	04713	2N3808
A3A9Q9	1853-0034	0	1	TRANSISTOR PNP SI TO-18 PD=360MW	04713	
A3A9Q10	1854-1030	0	1	TRANSISTOR-DUAL NPN TO-78 PD=750MW	04713	
A3A9Q10	1854-0957	0	0	ALTERNATE-TRANSISTOR NPN MP312-52		
A3A9Q11	1855-0050	4	1	TRANSISTOR-JFET DUAL N-CHAN D-MODE SI PD	34677	
A3A9Q12	1853-0322	9	1	TRANSISTOR PNP 2N2946A SI TO-46 PD=400MW	04713	
A3A9Q13	1855-0050	4	1	TRANSISTOR-JFET DUAL N-CHAN D-MODE SI PD	34677	
A3A9Q14	1855-0241	5	1	TRANSISTOR MOSFET N-CHAN E-MODE TO-72 SI		
A3A9Q15	1854-0404	3	1	TRANSISTOR NPN SI TO-18 PD=360MW	04713	
A3A9Q16	1854-1030	3	1	TRANSISTOR-DUAL NPN TO-78 PD=750MW	04713	
A3A9Q16	1854-0957	3	0	ALTERNATE-TRANSISTOR NPN MP312-52		
A3A9R1	3698-6377	5	1	RESISTOR 200 +-0.1% .125W TF TC=0+-25	91637	CMF-55-1. T-9
A3A9R2	3698-6377	5	1	RESISTOR 200 +-0.1% .125W TF TC=0+-25	91637	CMF-55-1, T-9
A3A9R3	0757-0442	3	1	RESISTOR 10K +-1% .125W TF TC=0+-100	19701	SFR25H
A3A9R4	0757-0438	3	1	RESISTOR 5.11K +-1% .125W TF TC=0+-100	19701	SFR25H
A3A9R5	0757-0442	3	1	RESISTOR 10K +-1% .125W TF TC=0+-100	19701	SFR25H
A3A9R6	0757-0280	3	1	7ESISTOR 1K +-1% .125W TF TC=0+-100	19701	SFR25H
A3A9R7	1757-0274	5	1	7ESISTOR 1.21K +-1% .125W TF TC=0+-100	19701	SFR25H
A3A9R8	1698-0083	3	1	RESISTOR 1.96K 1% .125W TF TC=0+-100	19701	SFR25H

**Indicates facto y-selected value*

HP Part Number 85662-60165

A3A9 Track and Hold

Reference Designatior	HP Part Number	C D	Qty	Description	Mfr Code	Mfr Part Number
A3A9R9	0698-3440		1	RESISTOR 196 1% .125W TF TC=0+-100	19701	SFR25H
A3A9R10	0757-0442		1	RESISTOR 10K +-1% .125W TF TC=0+-100	19701	SFR25H
A3A9R11	0757-0442		1	RESISTOR 10K +-1% .125W TF TC=0+-100	19701	SFR25H
A3A9R12	0757-0346		1	RESISTOR 10 +-1% .125W TF TC=0+-100	91637	CMF-55-1, T-1
A3A9R13	0757-0465		1	RESISTOR 100K +-1% .125W TF TC=0+-100	19701	SFR25H
A3A9R14	0757-0279		1	RESISTOR 3.16K +-1% .125W TF TC=0+-100	19701	SFR25H
A3A9R15	0698-3157		1	RESISTOR 19.6K 1% .125W TF TC=0+-100	19701	SFR25H
A3A9R16	0698-3157		1	RESISTOR 19.6K 1% .125W TF TC=0+-100	19701	SFR25H
A3A9R17	0698-6377		1	RESISTOR 200 +-0.1% .125W TF TC=0+-25	91637	CMF-55-1, T-9
A3A9R18	0698-6377		1	RESISTOR 200 +-0.1% .125W TF TC=0+-25	91637	CMF-55-1. T-9
A3A9R20	0698-6377		1	RESISTOR 200 +-0.1% .125W TF TC=0+-25	91637	CMF-55-1. T-9
A3A9R21	0698-6377		1	RESISTOR 200 +-0.1% .125W TF TC=0+-25	91637	CMF-55-1, T-9
A3A9R22	0757-0442		1	RESISTOR 10K +-1% .125W TF TC=0+-100	19701	SFR25H
A3A9R23	0757-0438		1	RESISTOR 5.11K +-1% .125W TF TC=0+-100	19701	SFR25H
A3A9R24	0757-0442		1	RESISTOR 10K +-1% .125W TF TC=0+-100	19701	SFR25H
A3A9R25	0757-0280		1	RESISTOR 1K +-1% .125W TF TC=0+-100	19701	SFR25H
A3A9R26	0757-0274		1	RESISTOR 1.21K +-1% .125W TF TC=0+-100	19701	SFR25H
A3A9R27	0757-0438		1	RESISTOR 5.11K +-1% .125W TF TC=D+-100	19701	SFR25H
A3A9R28	0757-0416		1	RESISTOR 511 +-1% .125W TF TC=0+-100	19701	SFR25H
A3A9R29	0698-3157		1	RESISTOR 19.6K 1% .125W TF TC=0+-100	19701	SFR25H
A3A9R30	0698-3157		1	RESISTOR 19.6K 1% .125W TF TC=0+-100	19701	SFR25H
A3A9R31	0757-0401		1	RESISTOR 100 +-1% .125W TF TC=0+-100	19701	SFR25H
A3A9R32	0757-0279		1	RESISTOR 3.16K +-1% .125W TF TC=0+-100	19701	SFR25H
A3A9R33	3698-3157		1	RESISTOR 19.6K 1% .125W TF TC=0+-100	19701	SFR25H
A3A9R34	3698-0084		1	RESISTOR 2.15K 1% .125W TF TC=0+-100	19701	SFR25H
A3A9R35	0757-0279		1	RESISTOR 3.16K +-1% .125W TF TC=0+-100	19701	SFR25H
A3A9R36	2100-3161		1	RESISTOR-TRMR 20K 10% TKF SIDE-AOJ 17-TR	73138	89PR20K
A3A9R37	0757-0462		1	RESISTOR 75K +-1% .125W TF TC=0+-100	19701	SFR25H
A3A9R38	0698-6323		1	RESISTOR 100 +-0.1% .125W TF TC=0+-25	91637	CMF-55-1, T-9
A3A9R39	2100-3164		1	RESISTOR-TRMR 10 20% TKF SIDE-ADJ 17-TRN	73138	89PR10
A3A9R40	1698-3136		1	RESISTOR 17.8K 1% .125W TF TC=0+-100	19701	SFR25H
A3A9R41	1757-0401		1	RESISTOR 100 +-1% .125W TF TC=0+-100	19701	SFR25H
A3A9R42	1757-0401		1	RESISTOR 100 +-1% .125W TF TC=0+-100	19701	SFR25H
A3A9R43	0757-0462		1	RESISTOR 75K +-1% .125W TF TC=0+-100	19701	SFR25H
A3A9R44	2100-3161		1	RESISTOR-TRMR 20K 10% TKF SIDE-AOJ 17-TR	73138	89PR20K
A3A9R45	0698-6323		1	RESISTOR 100 +-0.1% .125W TF TC=0+-25	91637	CMF-55-1. T-9
A3A9R46	1698-3136		1	RESISTOR 17.8K 1% .125W TF TC=0+-100	19701	SFR25H
A3A9R47	0698-6320		1	RESISTOR 5K +-0.1% .125W TF TC=D+-25	91637	CMF-55-1. T-9
A3A9R48	1757-0289		1	RESISTOR 13.3K +-1% .125W TF TC=0+-100	19701	SFR25H
A3A9R49	0757-0440		1	RESISTOR 7.5K +-1% .125W TF TC=0+-100	19701	SFR25H
A3A9R50	0757-1094		1	RESISTOR 1.47K +-1% .125W TF TC=0+-100	19701	SFR25H
A3A9R51	0757-0280		1	RESISTOR 1K +-1% .125W TF TC=0+-100	19701	SFR25H
A3A9R52	2100-3164		1	RESISTOR-TRMR 10 20% TKF SIDE-ADJ 17-TRN	73138	89PR10
A3A9R53	0698-0085		1	RESISTOR 2.61K 1% .125W TF TC=0+-100	19701	SFR25H
A3A9R54	1698-3157		1	RESISTOR 19.6K 1% .125W TF TC=0+-100	19701	SFR25H
A3A9R55	0698-3157		1	RESISTOR 19.6K 1% .125W TF TC=0+-100	19701	SFR25H
A3A9R56	1698-8298		1	RESISTOR 1.071K +-0.25% .125W TF TC=0+-2	19701	5033R

**Indicates factory-selected value*

HP Part Number 85662-60165

A3A9 Track and Hold

Reference Designation	HP Part Number	C.D	Qty	Description	Mfr Code	Mfr Part Number
A3A9R57	2100-3757	6	1	RESISTOR-TRMR 100 10% TKF SIDE-AOJ 17-TF	73138	67XR
A3A9R58	0698-3451	C	1	RESISTOR 133K 1% .125W TF TC=O+-100	19701	SFR25H
A3A9R59	2100-3750	9	1	RESISTOR-TRMR 20K 10% TKF SIDE-ADJ 17-TF	73136	67XR
A3A9R60	0699-1024	1	1	RESISTOR 10K +-0.01% .125W TF TC=O+-10		PR1/8
A3A9R61	0757-0441	8	1	RESISTOR 8.25K +-1% .125W TF TC=O+-100	19701	SFR25H
A3A9R62	0757-0346	2	1	RESISTOR 10 +-1% .125W TF TC=O+-100	91637	CMF-55-1, T-1
A3A9R63	0757-0346	2	1	RESISTOR 10 +-1% .125W TF TC=O+-100	91637	CMF-55-1. T-1
A3A9R64	0757-0279	C	1	RESISTOR 3.16K +-1% .125W TF TC=O+-100	19701	SFR25H
A3A9R65	0757-0280	3	1	RESISTOR 1K +-1% .125W TF TC=O+-100	19701	SFR25H
A3A9R67	0757-0416	7	1	RESISTOR 511 +-1% .125W TF TC=O+-100	19701	SFR25H
A3A9R68	0698-8872	9	1	RESISTOR 532 +-0.25% .125W TF TC=O+-100	K8479	H8
A3A9R69	0757-0442	9	1	RESISTOR 10K +-1% .125W TF TC=O+-100	19701	SFR25H
A3A9R70	0757-0280	3	1	RESISTOR 1K +-1% .125W TF TC=O+-100	19701	SFR25H
A3A9R72	0757-0438	3	1	RESISTOR 5.11K +-1% .125W TF TC=O+-100	19701	SFR25H
A3A9R73	0757-0280	3	1	RESISTOR 1K +-1% .125W TF TC=O+-100	19701	SFR25H
A3A9R74	0757-0442	9	1	RESISTOR 10K +-1% .125W TF TC=O+-100	19701	SFR25H
A3A9R75	0698-6323	1	1	RESISTOR 100 +-0.1% .125W TF TC=O+-25	91637	CMF-55-1, T-9
A3A9R76	0698-3156	2	1	7ESISTOR 14.7K 1% .125W TF TC=O+-100	19701	SFR25H
A3A9R77	0757-0280	3	1	RESISTOR 1K +-1% .125W TF TC=O+-100	19701	SFR25H
A3A9R78	0698-3156	2	1	RESISTOR 14.7K 1% .125W TF TC=O+-100	19701	SFR25H
A3A9R79	0757-0280	3	1	RESISTOR 1K +-1% .125W TF TC=O+-100	19701	SFR25H
A3A9R80	0698-3156	2	1	RESISTOR 14.7K 1% .125W TF TC=O+-100	19701	SFR25H
A3A9R81	0757-0280	3	1	RESISTOR 1K +-1% .125W TF TC=O+-100	19701	SFR25H
A3A9R82	0698-3156	2	1	RESISTOR 14.7K 1% .125W TF TC=O+-100	19701	SFR25H
A3A9R83	0757-0280	3	1	RESISTOR 1K +-1% .125W TF TC=O+-100	19701	SFR25H
A3A9R84	0698-3156	2	1	RESISTOR 14.7K 1% .125W TF TC=O+-100	19701	SFR25H
A3A9R85	0757-0280	3	1	RESISTOR 1K +-1% .125W TF TC=O+-100	19701	SFR25H
A3A9R86	0698-3150	6	1	RESISTOR 2.37K 1% .125W TF TC=D+-100	19701	SFR25H
A3A9R87	0698-3150	6	1	RESISTOR 2.37K 1% .125W TF TC=O+-100	19701	SFR25H
A3A9R88	0698-3150	6	1	RESISTOR 2.37K 1% .125W TF TC=O+-100	19701	SFR25H
A3A9R89	0698-3150	6	1	RESISTOR 2.371: 1% .125W TF TC=O+-100	19701	SFR25H
A3A9R90	0698-3150	6	1	RESISTOR 2.371: 1% .125W TF TC=D+-100	19701	SFR25H
A3A9TP1	0360-0535	D	1	TERMINAL-TEST POINT .330IN ABOVE	46819	
A3A9TP2	0360-0535	D	1	TERMINAL-TEST POINT .330IN ABOVE	46819	
A3A9TP3	0360-0535	D	1	TERMINAL-TEST POINT .330IN ABOVE	4G819	
A3A9TP9	0360-0535	D	1	TERMINAL-TEST POINT .330IN ABOVE	46819	
A3A9U1	1826-0415	4	1	ANALOG MULTIPLEXER 4 CHNL 16 -DIP-P		SD5000N
A3A9U4	1826-0026	3	1	:C COMPARATOR PRCN TO-99 PKG	27014	LM311H
A3A9U5	1826-0026	3	1	:C COMPARATOR PRCN TO-99 PKG	27014	LM311H
A3A9U6	1826-0089	3	1	IC OP AMP WB TO-99 PKG	34371	HA2-2525-5 (SELECTED)
A3A9U8	1820-0471	3	1	:C INV TTL HEX 1-INP	01295	SN7406N
A3A9U9	1820-1281	2	1	IC OCDR TTL LS 2-TO-4-LINE DUAL	01295	SN74LS139AN
A3A9U10	1820-1202	7	1	'C GATE TTL LS NAND TPL 3-INP	01295	SN74LS10N
A3A9U11	1820-1197	3	1	IC GATE TTL LS NAND QUAD 2-INP	01295	SN74LS00N
A3A9U12	1820-1423	4	1	C MV TTL LS MONOSTBL RETRIG DUAL	01295	SN74LS123N
A3A9U13	1820-1112	3	1	C FF TTL LS O-TYPE POS-EDGE-TRIG PRESET	01295	SN74LS74AN
A3A9U14	1826-0601	3	1	C OP AMP PRCN TO-99 PKG	06665	OP-16FJ
A3A9U15	1826-0601	3	1	C OP AMP PRCN TO-99 PKG	06665	OP-16FJ

**Indicates factory-selected value*

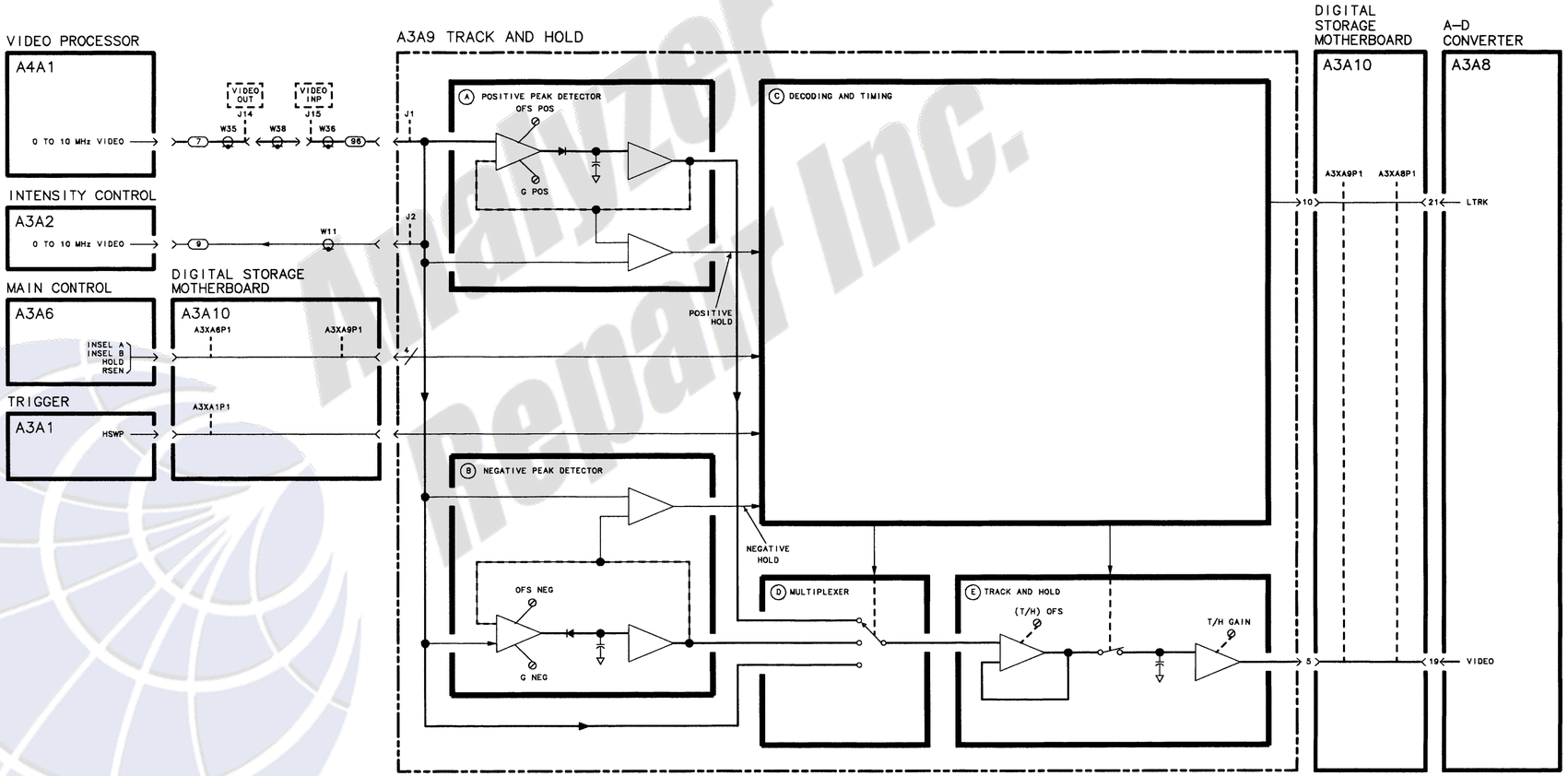

A3A9 TRACK AND HOLD, BLOCK DIAGRAM

Analyzer Repair Inc.

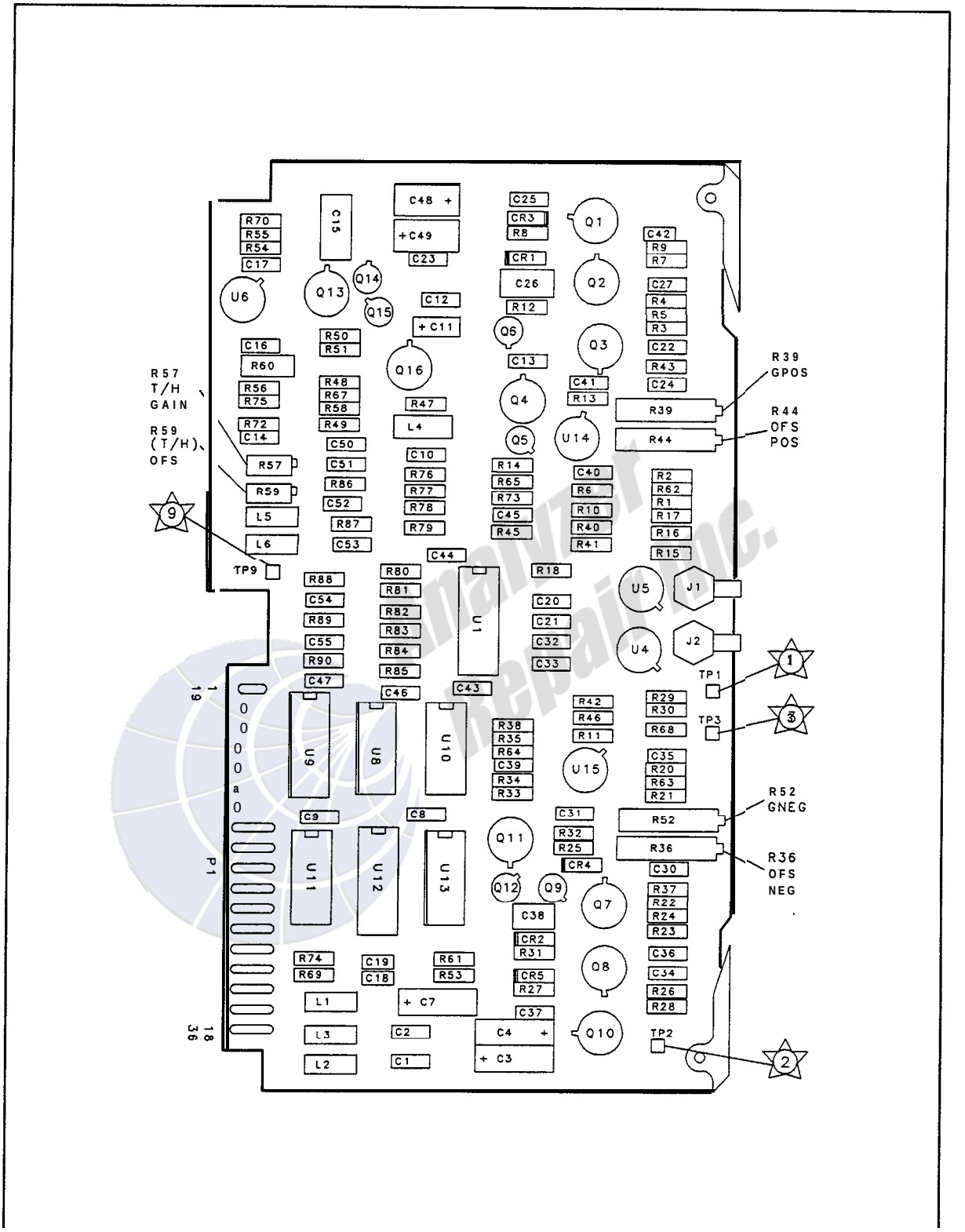

A3A9 Track and Hold Component Locations, 85662-60151

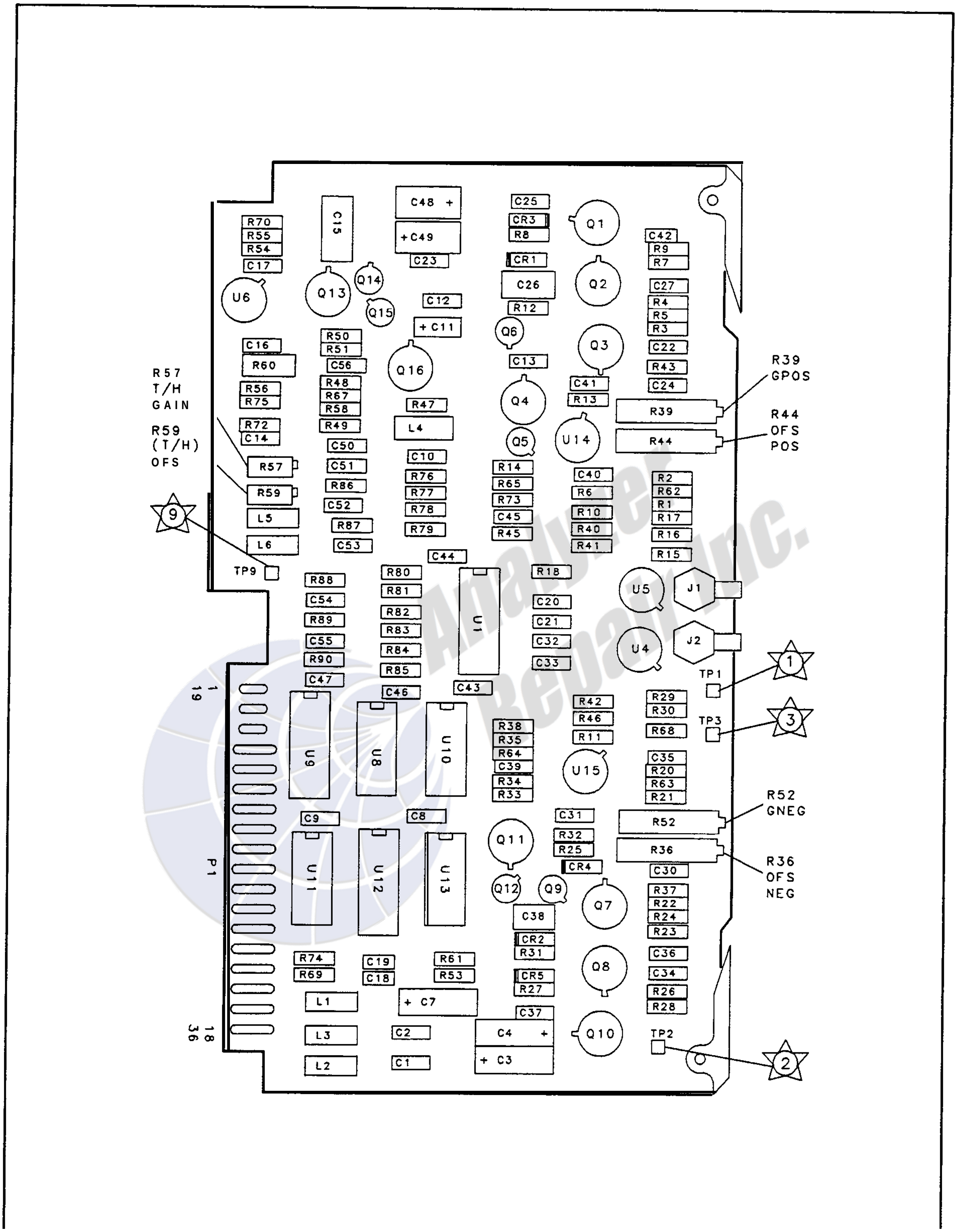

A3A9 Track and Hold Component Locations, 85662-60165

A3A9 TRACK AND HOLD
85662-60151
(SERIAL PREFIX: 2403A - 2534A)

P1

PIN	SIGNAL	TO/FROM	FUNCTION BLOCK
1	NC		
19	NC		
2	NC		
20	NC		
3	NC		
21	NC		
4	ADC GND		F
22	ADC GND		F
5	VIDEO	A3ABP1-19	E
23	ADC GND		F
6	ADC GND		F
24	ADC GND		F
7	NC		
25	NC		
8	NC		
26	NC		
9	NC		
27	NC		
10	LTRK	A3ABP1-21	C
28	NC		
11	NC		
29	NC		
12	INSEL B	A3ABP1-6	C
30	RSEN	A3ABP1-12	C
13	INSEL A	A3ABP1-23	C
31	HSWP	A3A1P1-21	C
14	NC		
32	NC		
15	HOLD	A3ABP1-7	C
33	NC		
16	DGND		F
34	DGND		F
17	+5V		F
35	NC		
18	+15V		F
36	-15V		F

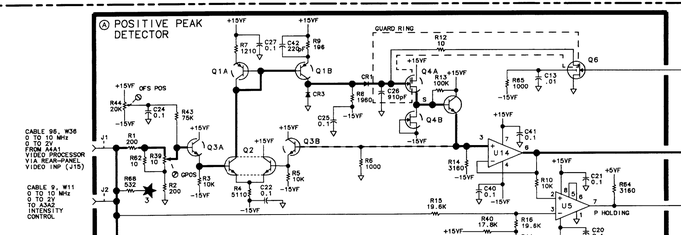

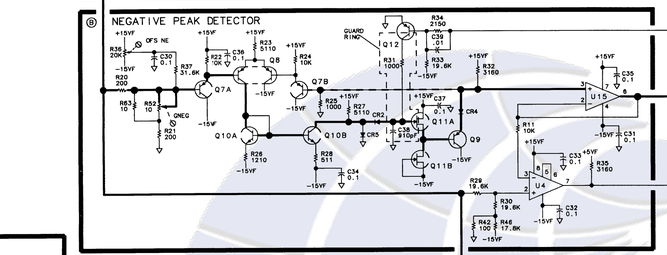

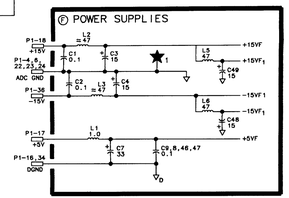

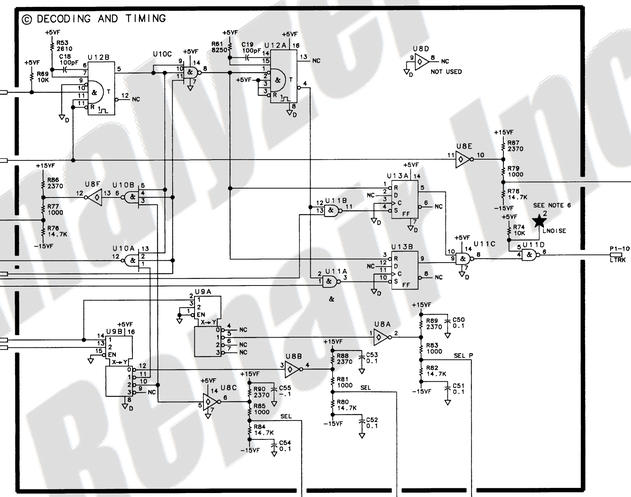

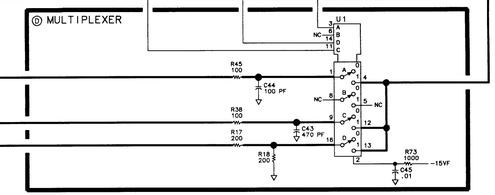

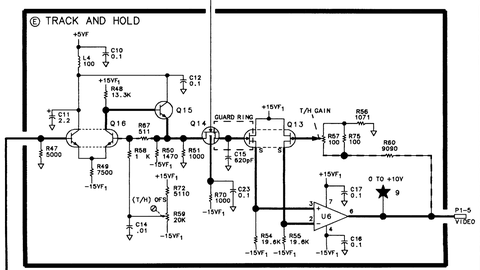

NOTES:

1. REFERENCE DESIGNATORS WITHIN THIS ASSEMBLY ARE ABBREVIATED. FOR COMPLETE REFERENCE DESIGNATION, PREFIX ABBREVIATION WITH ASSEMBLY DESIGNATION.
2. UNLESS OTHERWISE INDICATED: RESISTANCE IS IN OHMS (Ω) CAPACITANCE IS IN MICROFARADS (μF) INDUCTANCE IS IN MICROHENRIES (μH)
3. UNLESS OTHERWISE INDICATED: LOGIC LEVELS ARE TTL: +2.0V TO +5.0V=LOGIC '1' =HIGH 0V TO +0.8V=LOGIC '0' =LOW
4. MNEMONIC TABLE:

MNEMONIC	DESCRIPTION
INSEL A	MULTIPLEX CHANNEL SELECT
INSEL B	MULTIPLEX CHANNEL SELECT
RSEN	PEAK DETECTOR RESET ENABLE
HSWP	HIGH=SWEEPING
HOLD	SAMPLE/HOLD ON/OFF CONTROL
OFS POS	OFFSET POSITIVE PEAK DETECTOR
GPOS	GAIN POSITIVE PEAK DETECTOR
OFS NEG	OFFSET NEGATIVE PEAK DETECTOR
QNEG	GAIN NEGATIVE PEAK DETECTOR
T/H GAIN	TRACK AND HOLD GAIN ADJUST
(T/H) OFS	TRACK AND HOLD OFFSET ADJUST
LTRK	TRACKING INPUT SIGNAL

5. INPUT SELECT TABLE

INSEL A	INSEL B	FUNCTION SELECTED
0	0	SAMPLE
1	0	POS PEAK
0	1	NOS PEAK
1	1	POS PEAK

6. GROUNDING LNOISE FORCES LTRK HIGH, INDICATING A "HOLD" SIGNAL. THIS IS DONE TO CHECK DYNAMIC TRACKING OF PEAK DETECTORS.
7. Q1,2,3,7,8,10 AND 18 ARE DUAL TRANSISTORS WITH THE FOLLOWING PIN CONFIGURATION:



8. Q6 AND Q14 ARE MOS n-channel ENHANCEMENT MODE FETs WITH THE FOLLOWING PIN CONFIGURATION:



9. Q4,11, AND 13 ARE DUAL FETs WITH THE FOLLOWING PIN CONFIGURATION:



10. BIAS CHECK
TEST CONDITIONS ASSUME THE FOLLOWING INSTRUMENT CONTROL SETTINGS:
INSTRUMENT PRESET
CENTER FREQUENCY 30MHz
FREQUENCY SPAN 2Hz
ATTENUATION 0dB
SINGLE SWEEP

TP3 [U1 PIN 1]	U1 PIN 9	TP 9 [U1 PIN 4]
2.00V	98V	68V	10V	.68V

11. UNLESS OTHERWISE INDICATED: SIGNALS ENTER AT LEFT SIDE OR TOP AND EXIT AT RIGHT SIDE OR BOTTOM OF FUNCTION BLOCKS.

A3A9

A3A9 TRACK AND HOLD, SCHEMATIC DIAGRAM

A3A9 TRACK AND HOLD
85662-60165
(SERIAL PREFIX: 2541A)

P1

PIN	SIGNAL	TO/FROM	FUNCTION BLOCK
1	NC		
19	NC		
2	NC		
20	NC		
3	NC		
21	NC		
4	ADC GND		F
22	ADC GND		F
5	VIDEO	A3A8P1-19	E
23	ADC GND		F
6	ADC GND		F
24	ADC GND		F
7	NC		
25	NC		
8	NC		
26	NC		
9	NC		
27	NC		
10	LTRK	A3A8P1-21	C
28	NC		
11	NC		
29	NC		
12	INSEL B	A3A8P1-6	C
30	RSEN	A3A8P1-12	C
13	INSEL A	A3A8P1-23	C
31	HSWP	A3A1P1-21	C
14	NC		
32	NC		
15	HOLD	A3A8P1-7	C
33	NC		
16	DGND		F
34	DGND		F
17	+5V		F
35	NC		
18	+15V		F
36	-15V		F

CABLE 96, W36
0 TO 10 MHz
0 TO 2V
FROM A4A1
VIDEO PROCESSOR
VIA REAR-PANEL
VIDEO INP (J15)

CABLE 9, W11
0 TO 10 MHz
0 TO 2V
TO A3A3
INTENSITY
CONTROL

Ⓐ POSITIVE PEAK DETECTOR

Ⓑ NEGATIVE PEAK DETECTOR

Ⓒ DECODING AND TIMING

Ⓓ MULTIPLEXER

Ⓔ TRACK AND HOLD

Ⓕ POWER SUPPLIES

P1-31 HSWP
P1-15 HOLD
P1-30 RSEN
P1-13 INSEL A
P1-12 INSEL B
P1-10 LTRK
P1-5 VIDEO

SEE NOTE 5
SEE NOTE 6

NOTES:

1. REFERENCE DESIGNATORS WITHIN THIS ASSEMBLY ARE ABBREVIATED. FOR COMPLETE REFERENCE DESIGNATION, PREFIX ABBREVIATION WITH ASSEMBLY DESIGNATION.
2. UNLESS OTHERWISE INDICATED: RESISTANCE IS IN OHMS (Ω) CAPACITANCE IS IN MICROFARADS(μF) INDUCTANCE IS IN MICROHENRIES(μH)
3. UNLESS OTHERWISE INDICATED: LOGIC LEVELS ARE TTL: +2.0V TO +5.0V=LOGIC '1'=HIGH 0V TO +0.8V=LOGIC '0'=LOW
4. MNEMONIC TABLE:

MNEMONIC	DESCRIPTION
INSEL A	MULTIPLEX CHANNEL SELECT
INSEL B	MULTIPLEX CHANNEL SELECT
RSEN	PEAK DETECTOR RESET ENABLE
HSWP	HIGH=SWEEPING
HOLD	SAMPLER ON/OFF CONTROL
OFS POS	OFFSET POSITIVE PEAK DETECTOR
GPOS	GAIN POSITIVE PEAK DETECTOR
OFS NEG	OFFSET NEGATIVE PEAK DETECTOR
GNEG	GAIN NEGATIVE PEAK DETECTOR
T/H GAIN	TRACK AND HOLD GAIN ADJUST
(T/H) OFS	TRACK AND HOLD OFFSET ADJUST
LTRK	TRACKING INPUT SIGNAL

5. INPUT SELECT TABLE

INSEL A	INSEL B	FUNCTION SELECTED
0	0	SAMPLE
1	0	POS PEAK
0	1	NEG PEAK
1	1	POS PEAK

6. GROUNDING LNOISE FORCES LTRK HIGH, INDICATING A NOISY SIGNAL. THIS IS DONE TO CHECK DYNAMIC TRACKING OF PEAK DETECTORS.
7. Q1,2,3,7,8,10AND 18 ARE DUAL TRANSISTORS WITH THE FOLLOWING PIN CONFIGURATION:

TOP VIEW

8. Q6 AND Q14 ARE MOS n-channel ENHANCEMENT MODE FETs WITH THE FOLLOWING PIN CONFIGURATION:

TOP VIEW

9. Q4, 11, AND 13 ARE DUAL FETs WITH THE FOLLOWING PIN CONFIGURATION:

TOP VIEW

10. BIAS CHECK
TEST CONDITIONS ASSUME THE FOLLOWING INSTRUMENT CONTROL SETTINGS:
INSTRUMENT PRESET
CENTER FREQUENCY 20MHz
FREQUENCY SPAN 0Hz
ATTENUATION 0dB
SINGLE SWEEP

TP3	U1 PIN 1	U1 PIN 9	TP 9	U1 PIN 4
2.00V	98V	98V	10V	98V

11. UNLESS OTHERWISE INDICATED: SIGNALS ENTER AT LEFT SIDE OR TOP AND EXIT AT RIGHT SIDE OR BOTTOM OF FUNCTION BLOCKS.

A3A9

A3A9 TRACK AND HOLD, SCHEMATIC DIAGRAM

HP Part Number 85662160015

A3A10 Digital Storage Motherboard

Reference Designatior	HP Part Number	D	Qty	Description	Mfr Code	Mfr Part Number
A3A10	85662-60015		1	DIGITAL STORAGE MOTHERBOARD ASSEMBLY	2848C	85662-60015
A3A10A3XA1P1	1251-2026	I	1	CONNECTOR-PC EDGE 18 CONT/ROW 2-ROWS		SCM18D/7-1 HP
A3A10A3XA1P2	1251-2026	I	1	CONNECTOR-PC EDGE 18 CONT/ROW 2-ROWS		SCM18D/7-1 HP
A3A10A3XA2P1	1251-2026	I	1	CONNECTOR-PC EDGE 18 CONT/ROW 2-ROWS		SCM18D/7-1 HP
A3A10A3XA2P2	1251-2026	E	1	CONNECTOR-PC EDGE 18 CONT/ROW 2-ROWS		SCM18D/7-1 HP
A3A10A3XA3P1	1251-2026	E	1	CONNECTOR-PC EDGE 18 CONT/ROW 2-ROWS		SCM18D/7-1 HP
A3A10A3XA3P2	1251-2026	E	1	CONNECTOR-PC EDGE 18 CONT/ROW E-ROWS		SCM18D/7-1 HP
A3A10A3XA4P1	1251-2026	E	1	CONNECTOR-PC EDGE 18 CONT/ROW L-ROWS		SCM18D/7-1 HP
A3A10A3XA5P1	1251-2026	E	1	CONNECTOR-PC EDGE 18 CONT/ROW L-ROWS		SCM18D/7-1 HP
A3A10A3XA6P1	1251-2026	E	1	CONNECTOR-PC EDGE 18 CONT/ROW L-ROWS		SCM18D/7-1 HP
A3A10A3XA6P2	1251-2026	E	1	CONNECTOR-PC EDGE 18 CONT/ROW L-ROWS		SCM18D/7-1 HP
A3A10A3XA7P1	1251-2026	E	1	CONNECTOR-PC EDGE 18 CONT/ROW L-ROWS		SCM18D/7-1 HP
A3A10A3XA7P2	1251-2026	E	1	CONNECTOR-PC EDGE 18 CONT/ROW 2-ROWS		SCM18D/7-1 HP
A3A10A3XA8P1	1251-2026	E	1	CONNECTOR-PC EDGE 18 CONT/ROW L-ROWS		SCM18D/7-1 HP
A3A10A3XA9P1	1251-2026	E	1	CONNECTOR-PC EDGE 18 CONT/ROW E-ROWS		SCM18D/7-1 HP
A3A10J1	1200-1204	E	1	SOCKET-IC 14-CONT DIP DIP-SLDR	00779	2-641609-2
A3A10J2	1251-5926	3	1	CONN-POST TYPE .100-PIN-SPCG 50-CONT	18873	67997-650
A3A10J3	1251-5816	3	1	CONN-POST TYPE .150-PIN-SPCG 4-CONT	00779	87236-3
A3A10J4	1200-1204	5	1	SOCKET-IC 14-CONT DIP DIP-SLDR	00779	2-641609-2
A3A10MP1	0361-0002	3	1	RIVET-SEMITUB OVH .146DIA .25LG	12014	R-4013
A3A10MP3	35662-00045	7	1	YOTHERBOARD SUPPORT BRACKET	28480	85662-00045
A3A10W2	35662-60068	0	1	43 INTERFACE CABLE ASSEMBLY	28480	85662-60068
A3A10W3	35662-60062	4	1	43 POWER SUPPLY CABLE ASSEMBLY	28480	85662-60062

**Indicates factory-selected value*

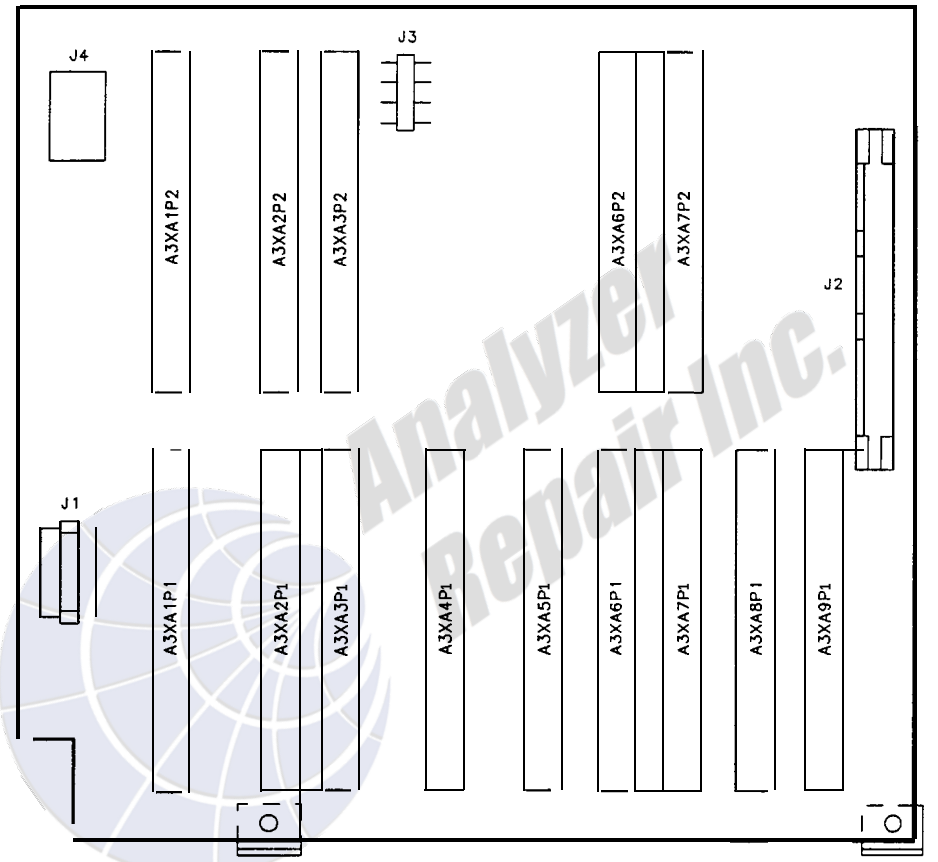

A3A10 Digital Storage Motherboard Component Locations, 85662-60015

A3A10 DIGITAL STORAGE MOTHERBOARD
85662-60015 (SERIAL PREFIX: 2403A)

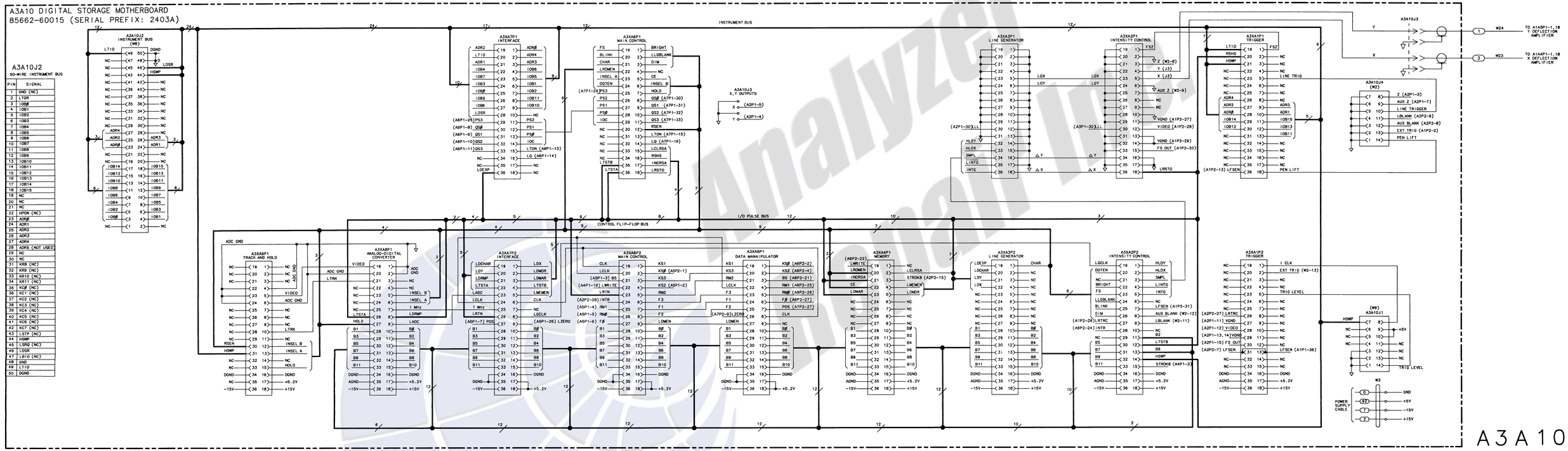

A3A10 DIGITAL STORAGE MOTHERBOARD, INTERCONNECT DIAGRAM

A4A1

A4A1 Video Processor, Circuit Description

A4A1 Video Processor filters the detected IF signal from A4A2 Log Amplifier, it sets the dB/DIV LOG SCALE and the REFERENCE LEVEL offsets below -50 dBm or -70 dBm, and it provides the IF video output and the X and Y recorder outputs.

Video Filter ©

The Video Filter is an RC low pass filter with selectable R and C. The series resistance R is one of two values controlled by switch U7. When the switch is closed (0), R17 is short circuited and the series resistance is minimum. In this state, video bandwidths from 3 kHz to 3 MHz are attainable (The 3 MHz nominal bandwidth is attained when Q14 through Q20 are turned off). When switch U7 is open (1), the series resistance R is high, approximately equal to R17 and video bandwidths from 1 Hz to 1 kHz are attainable. Shunt capacitors C5 through C11 are selected by switching transistors Q14 through Q20. Only one of these switching transistors can be on at any one time. Each capacitor except C11 is used with the high series resistance for the lower bandwidths and the low series resistance for the higher bandwidths.

Log Expand Ⓓ

The Log Expand circuit allows four different amplitude scales: 10, 5, 2, 1 dB/DIV. Changes in the amplitude scale are accomplished by first amplifying the video signal, then attenuating it various amounts. This is accomplished by FET input amplifier U2, which offsets the input -5 V and whose gain (set by R22 and R21) is 5. The offset is set by the current through Q1. This current source is adjustable using OS potentiometer R14. Switching transistors Q4, Q5, and Q6 are turned on or off to achieve voltage divider ratios of 1/10, 1/5, 1/2, and 1. Diodes CR2 and CR3 clamp this attenuated signal at about -1.2 V to prevent forward biasing any switch in the off state. A final amplifier consisting of Q7, Q8, and Q9 amplifies this attenuated signal by 4 and offsets the output +2 V. A +2 V output corresponds to a full-scale signal. This final amplifier is a two-stage amplifier. The first stage is a FET input stage made up of dual FET Q7. The first-stage output is multiplied by the transistor inverter Q8, whose output is buffered by an emitter follower Q9. This output is fed back to the inverting input through a resistor divider stick. Gain of the amplifier is adjusted by ZERO potentiometer R32, and offset for full scale is adjusted by FS potentiometer R36. Diode CR1 clamps the output at about -1.2 V.

Log Offset Current Source Ⓐ

The Log Offset Current Source simulates log gain for instrument reference levels below -60 dBm. This is achieved by offsetting the 0 V to 1 V video input signal by driving current through the source resistance R16. This current is changed by supplying different currents into the emitter of Q13, the transistor current source. Currents are controlled by switching transistors Q10, Q11, and Q12. For example, when switch Q12 is turned on, the transistor saturates and a current flows through R5 into the emitter of Q13. This emitter current (set by the voltage drop across R5) is closely equal to the collector current through Q12. The voltage drop across R5 can be changed by varying LG OS potentiometer R2, since U6 pin 3 and the emitter of Q13 are at the same voltage. This is true because U6 is a voltage follower with unity gain. Once R2 is set, the accuracy of R5, R7, and R9 determines the relative accuracy of the offsets, 0.1 V, 0.2 V, 0.2 V (10 dB, 20 dB, 20 dB).

Power Supplies Ⓕ

Zener diode VR2 is used to provide the -8.8 V supply, which is used in the Log Expand circuit with the FS adjustment R36.

Decode Logic Ⓑ

The Decode Logic circuit performs additional decoding on output lines from IF Control A4A9. VBWA, VBWB, VBWC, and VBWD are decoded by U8, a l-of-8 decoder, and inverted by U10 to drive one of the seven capacitors used in the Video Filter. U11 decodes A LOG and B LOG and drives the switches that vary the attenuator in the Log Expand circuit.

Recorder Output Ⓔ

The Recorder Output circuit provides outputs for an X-Y plotter. Also provided are outputs for calibrating lower left (LL) and upper right (UR). Calibration outputs and signal outputs are routed through switch U4. A control line, REC CAL, from IF Control A4A9 controls the state of the U4 switches. When REC CAL is high, the video output through U3 and AUX SWEEP have closed paths through the switch to provide VIDEO and SWEEP outputs to the rear panel. When the REC CAL is low, a closed path through the switch exists between the calibration voltages and the VIDEO and SWEEP outputs. Control line REC ZERO causes the FS or ZERO voltage to appear across the R50, R55, R51 divider stick. When in LL, REC ZERO is low and the switch inputs are pulled to about 0 V. When REC ZERO is high, its open collector output will be set to the voltage determined by the divider stick: +10 V for X_r out, and +1 V for Y_r out.

Analyzer Repair Inc.

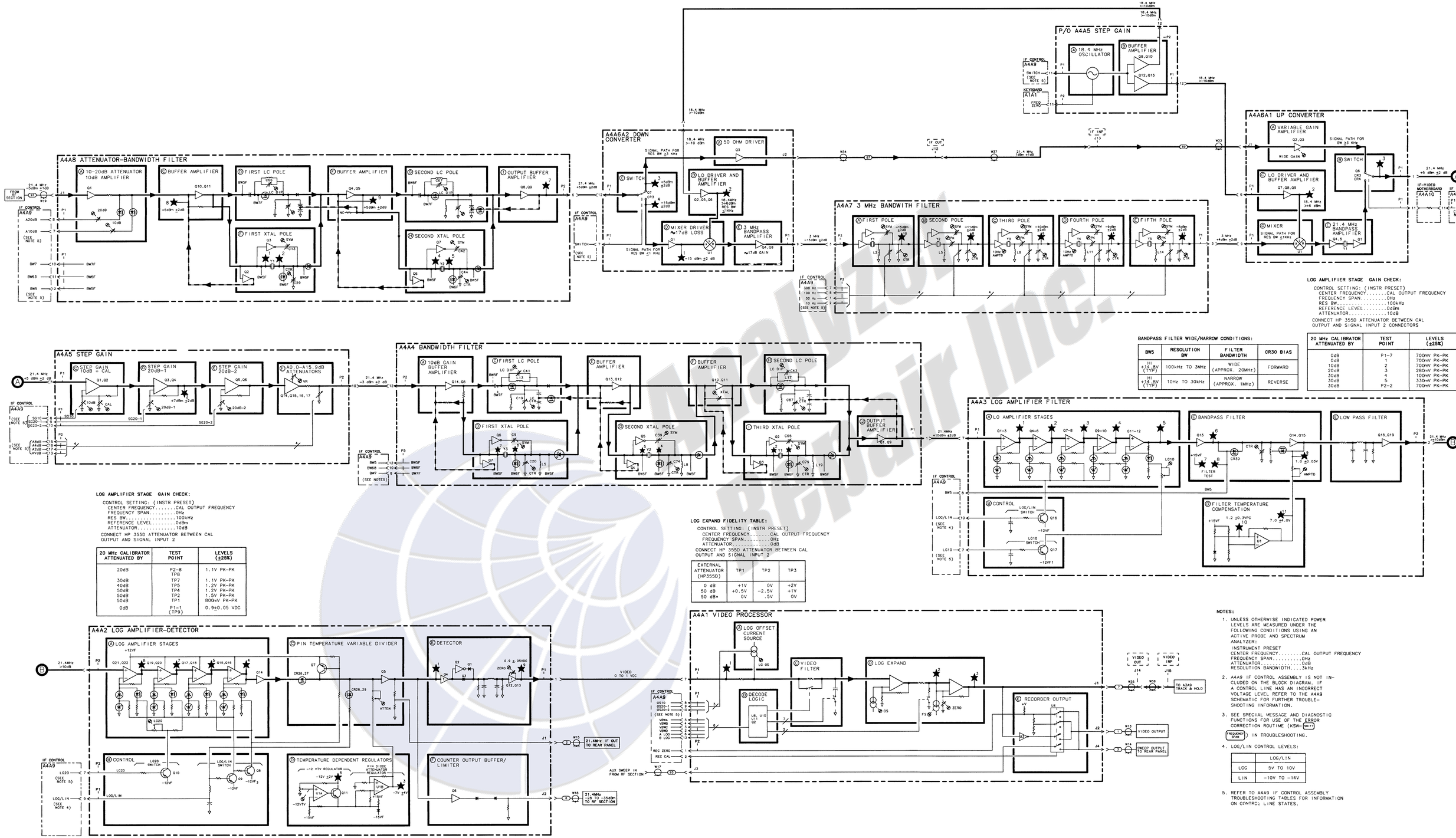

LOG AMPLIFIER STAGE GAIN CHECK:

CONTROL SETTING: (INSTR PRESET)
CENTER FREQUENCY.....CAL OUTPUT FREQUENCY
FREQUENCY SPAN.....0Hz
RES BW.....100kHz
REFERENCE LEVEL.....0dBm
ATTENUATOR.....10dB
CONNECT HP 355D ATTENUATOR BETWEEN CAL OUTPUT AND SIGNAL INPUT 2

20 MHz CALIBRATOR ATTENUATED BY	TEST POINT	LEVELS (±20%)
20dB	P2-8 TP8	1.1V PK-PK
30dB	TP7	1.1V PK-PK
40dB	TP5	1.2V PK-PK
50dB	TP4	1.2V PK-PK
50dB	TP2	1.5V PK-PK
50dB	TP1	800mV PK-PK
0dB	P1-1 (TP9)	0.9±0.05 VDC

LOG EXPAND FIDELITY TABLE:

CONTROL SETTING: (INSTR PRESET)
CENTER FREQUENCY.....CAL OUTPUT FREQUENCY
FREQUENCY SPAN.....0Hz
ATTENUATOR.....0dB
CONNECT HP 355D ATTENUATOR BETWEEN CAL OUTPUT AND SIGNAL INPUT 2

EXTERNAL ATTENUATOR (HP355D)	TP1	TP2	TP3
0 dB	+1V	0V	+2V
50 dB	+0.5V	-2.5V	+1V
50 dB*	0V	.5V	0V

LOG AMPLIFIER STAGE GAIN CHECK:

CONTROL SETTING: (INSTR PRESET)
CENTER FREQUENCY.....CAL OUTPUT FREQUENCY
FREQUENCY SPAN.....0Hz
RES BW.....100kHz
REFERENCE LEVEL.....0dBm
ATTENUATOR.....10dB
CONNECT HP 355D ATTENUATOR BETWEEN CAL OUTPUT AND SIGNAL INPUT 2

20 MHz CALIBRATOR ATTENUATED BY	TEST POINT	LEVELS (±20%)
0dB	P1-7	700mV PK-PK
0dB	1	700mV PK-PK
10dB	2	700mV PK-PK
20dB	3	280mV PK-PK
30dB	4	100mV PK-PK
30dB	5	330mV PK-PK
30dB	P2-2	700mV PK-PK

BANDPASS FILTER WIDE/NARROW CONDITIONS:

BW5	RESOLUTION BW	FILTER BANDWIDTH	CR30 BIAS
HI +12.8V (TYP)	100kHz TO 3MHz	WIDE (APPROX. 20MHz)	FORWARD
HI +12.8V (TYP)	10Hz TO 30kHz	NARROW (APPROX. 1MHz)	REVERSE

NOTES:

1. UNLESS OTHERWISE INDICATED POWER LEVELS ARE MEASURED UNDER THE FOLLOWING CONDITIONS USING AN ACTIVE PROBE AND SPECTRUM ANALYZER:
   INSTRUMENT PRESET
   CENTER FREQUENCY.....CAL OUTPUT FREQUENCY
   FREQUENCY SPAN.....0Hz
   ATTENUATOR.....0dB
   RESOLUTION BANDWIDTH....3kHz
2. A4A9 IF CONTROL ASSEMBLY IS NOT INCLUDED ON THE BLOCK DIAGRAM. IF A CONTROL LINE HAS AN INCORRECT VOLTAGE LEVEL REFER TO THE A4A9 SCHEMATIC FOR FURTHER TROUBLESHOOTING INFORMATION.
3. SEE SPECIAL MESSAGE AND DIAGNOSTIC FUNCTIONS FOR USE OF THE ERROR CORRECTION ROUTINE (KSW- SHIFT FREQUENCY SPAN) IN TROUBLESHOOTING.
4. LOG/LIN CONTROL LEVELS:

	LOG/LIN
LOG	5V TO 10V
LIN	-10V TO -14V

5. REFER TO A4A9 IF CONTROL ASSEMBLY TROUBLESHOOTING TABLES FOR INFORMATION ON CONTROL LINE STATES.

A4A1 Video Processor, Troubleshooting

Proper operation of the Log Offsets, OS10, OS20-1, and OS20-2 can de determined from the display.

Connect an HP 355D Step Attenuator between CAL OUTPUT and the input of the spectrum analyzer. Set this attenuator to 100 dB. Press Instrument Preset and key in the following settings:

[CENTER FREQUENCY] ..... equal to CAL OUTPUT frequency
[FREQUENCY SPAN] ..... 0 Hz
[RES BW] ..... 3 kHz
[VIDEO BW] ..... 10 Hz
[ATTEN] 0dB
[SHIFT] [ATTEN]
(SWEEP) ..... 20 s
[REFERENCE LEVEL] ..... -40dBm

Press the (SINGLE) sweep key. Then press the DATA STEP ⇅ key repeatedly. A display similar to Figure 1 should result. If a step is missing, one of the offsets or its control circuitry is defective. The truth table in Note 5 is an aid to determine which offset circuit is not operating properly. 0 V in the table indicates that an offset is active. Accurate determination of amplitude step size is attainable using the MARKER ▲ key and the DATA knob.

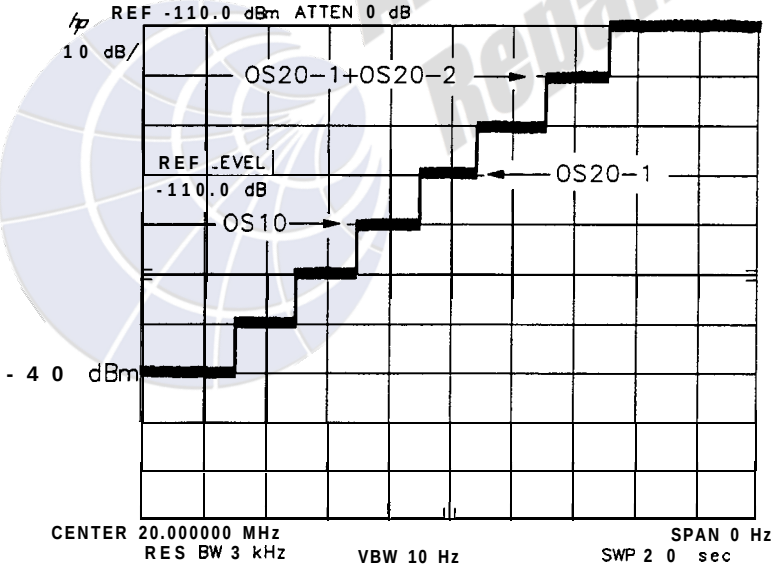

NOTE: Center Frequency readout will be 100.000 000 MHz for an HP85668

Figure 1. Log Offset Gain Step Display

The Video Filter circuit can be checked from the front panel. With no input signal, press Instrument Preset and set the controls as follows:

CENTER FREQUENCY	25 MHz
FREQUENCY SPAN	100 kHz
SWEEP TIME	20 s
REFERENCE LEVEL	-90 dBm
VIDEO BW	1 Hz

Press SINGLE sweep. Then press the DATA STEP ↑ key once as the cursor crosses each horizontal division. The display should appear as in Figure 2. Now key in SHIFT TRACE A VIEW. This turns only the Negative Peak Detector on. Reset VIDEO BW to 1 Hz. Press the SINGLE sweep key. Then press the DATA step ↑ key repeatedly. The display should appear as in Figure 3.

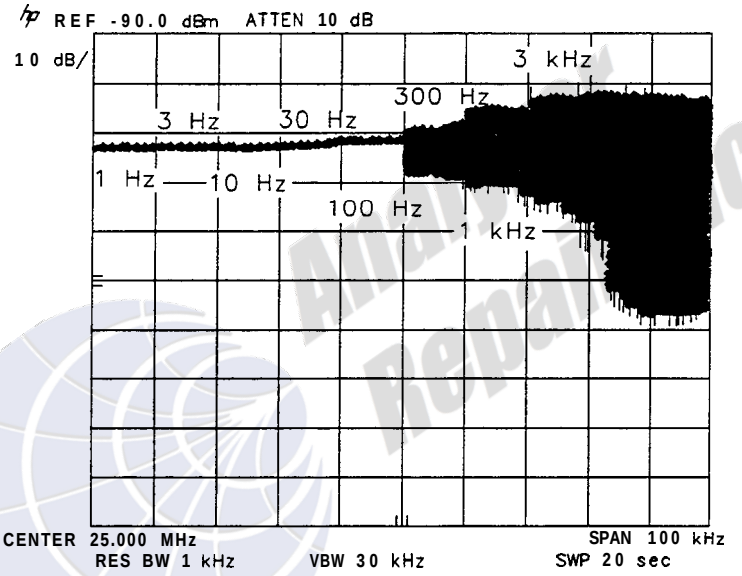

Figure 2. Video Bandwidth Step Display

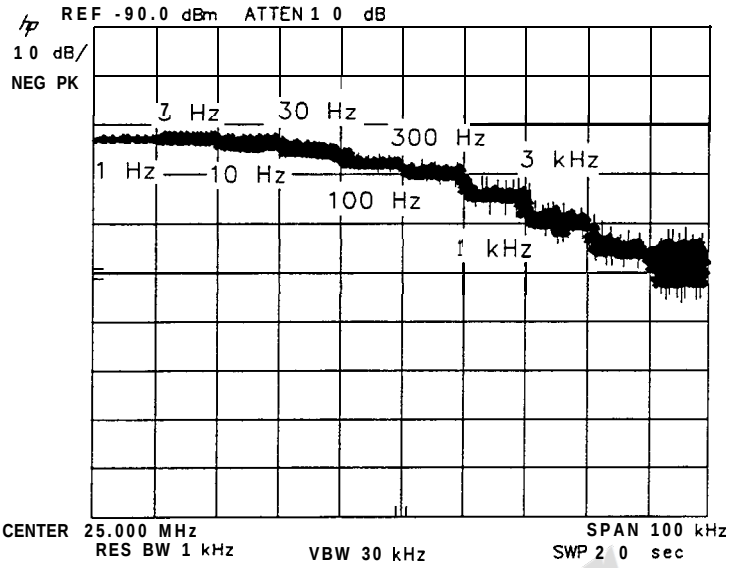

Figure 3. Video Bandwidth Step Display with Negative Peak Detection

If the displayed noise does not change monotonically (continuously decrease level) with the step key, the indicated Video bandwidth is faulty. Refer to the service sheet to determine the defective switch, capacitor, or decoder.

The Log Expand and Decode Logic circuitry can be accurately checked by using the Error Correction Routine. Pressing SHIFT (FREQUENCY SPAN) (KSW) starts this routine. The error terms are displayed by pressing SHIFT LINE (KSw). The last three lines give the offset errors from the 1 dB LOG reference for the 2 dB, 5 dB, 5 dB, and 10 dB LOG scales, respectively. Maximum error is ±0.5 dB for proper operation.

HP Part Number 85662-60122

A4A1 Video Processor

Reference Designation	HP Part Number	CD	Qty	Description	Mfr Code	Mfr Part Number
A4A1	85662-60122	7	1	BOARD ASSEMBLY, VIDEO PROCESSOR	28480	85662-60122
A4A1C2	0160-2055	9	1	CAPACITOR-FXD .01UF +80-20% 100VDC CER		805-504 Y5V 1032
A4A1C4	0160-2055	9	1	CAPACITOR-FXD .01UF +80-20% 100VDC CER		805-504 Y5V 1032
A4A1C5	0160-0945	2	1	CAP-FXD 910pF 100 V MICA	09023	CD15FA911J03
A4A1C6	0160-0155	6	1	CAPACITOR-FXD 3300PF +-10% 200VDC POLYE	84411	HEW-238M
A4A1C7	0160-0161	4	1	CAPACITOR-FXD .01UF +-10% 200VDC POLYE	84411	HEW-238M
A4A1C8	0160-0163	6	1	CAPACITOR-FXD .033UF +-10% 200VDC POLYE	84411	HEW-238M
A4A1C9	0160-0168	1	1	CAP-FXD 0.1uF 200 V POLYE-FL	84411	HEW-238M
A4A1C10	0180-2205	3	1	CAPACITOR-FXD .33UF+-10% 35VDC TA	56289	150D334X9035A2-DYS
A4A1C11	0180-0291	3	1	CAPACITOR-FXD 1UF+-10% 35VDC TA	56289	150D105X9035A2-DYS
A4A1C12	0160-2055	9	1	CAPACITOR-FXD .01UF +80-20% 100VDC CER		805-504 Y5V 1032
A4A1C14	0160-2055	9	1	CAPACITOR-FXD .01UF +80-20% 100VDC CER		805-504 Y5V 1032
A4A1C15	0160-2055	9	1	CAPACITOR-FXD .01UF +80-20% 100VDC CER		805-504 Y5V 1032
A4A1C16	0180-1719	2	1	CAP-FXD 22uF 25 V WT-SLG-TA-ELCTLT	56289	109D226X9025C2-DYP
A4A1C17	0180-0229	7	1	CAP-FXD 33uF 10 V TA	56289	150D336X9010B2-DYS
A4A1C18	0180-1719	2	1	CAP-FXD 22uF 25 V WT-SLG-TA-ELCTLT	56289	109D226X9025C2-DYP
A4A1C19	0160-2055	9	1	CAPACITOR-FXD .01UF +80-20% 100VDC CER		805-504 Y5V 103Z
A4A1C20	0160-2055	9	1	CAPACITOR-FXD .01UF +80-20% 100VDC CER		805-504 Y5V 1032
A4A1C21	0160-2055	9	1	CAPACITOR-FXD .01UF +80-20% 100VDC CER		805-504 Y5V 1032
A4A1C22	0160-2055	9	1	CAPACITOR-FXD .01UF +80-20% 100VDC CER		805-504 Y5V 103Z
A4A1C23	0160-4805	1	1	CAPACITOR-FXD 47PF +-5% 100VDC CER 0+-30	04222	SA102A470JAAH
A4A1C24	0160-4805	1	1	CAPACITOR-FXD 47PF +-5% 100VDC CER 0+-30	04222	SA102A470JAAH
A4A1C25	0160-4800	6	1	CAP-FXD 120pF 100 V	04222	SA102A121JAAH
A4A1C26	0160-4791	4	1	CAPACITOR-FXD 10PF +-5% 100VDC CER 0+-30	04222	SA102A100JAAH
A4A1C27	0160-4805	1	1	CAPACITOR-FXD 47PF +-5% 100VDC CER 0+-30	04222	SA102A470JAAH
A4A1C28	0160-4084	8	1	CAP-FXD 0.1uF 50 V	56289	1C20X7R104M050B
A4A1C29	0160-4084	8	1	CAP-FXD 0.1uF 50 V	56289	1C20X7R104M050B
A4A1C30	0160-4084	8	1	CAP-FXD 0.1uF 50 V	56289	1C20X7R104M050B
A4A1CR1	1901-0535	9	1	DIODE-SCHOTTKY SM SIG		
A4A1CR2	1901-0179	7	1	DIODE-SWITCHING 15V 50MA 750PS DO-7	27014	FD777
A4A1CR3	1901-0179	7	1	DIODE-SWITCHING 15V 50MA 750PS DO-7	27014	FD777
A4A1J1	1250-2112	1	1	CONNECTOR-RF SMB M SGL-HOLE-FR 50-OHM	98291	051-047-0259-220
A4A1J2	1250-2112	1	1	CONNECTOR-RF SMB M SGL-HOLE-FR 50-OHM	98291	051-047-0259-220
A4A1J3	1250-2112	1	1	CONNECTOR-RF SMB M SGL-HOLE-FR 50-OHM	98291	051-047-0259-220
A4A1J4	1250-2112	1	1	CONNECTOR-RF SMB M SGL-HOLE-FR 50-OHM	98291	051-047-0259-220
A4A1L1	9140-0114	4	1	INDUCTOR RF-CH-MLD 10UH +-10% .166D-INX.	99800	1537-36
A4A1L2	9140-0114	4	1	INDUCTOR RF-CH-MLD 10UH +-10% .166D-INX.	99800	1537-36
A4A1L3	9100-1618	1	1	INDUCTOR RF-CH-MLD 5.6UH +-10% .166D-INX	99800	1537-30
A4A1L4	9100-1618	1	1	INDUCTOR RF-CH-MLD 5.6UH +-10% .166D-INX	99800	1537-30
A4A1L5	9100-1618	1	1	INDUCTOR RF-CH-MLD 5.6UH +-10% .166D-INX	99800	1537-30
A4A1MP2	85662-20041	5	1	COVER, VIDEO PROCESSOR	28480	85662-20041
A4A1MP3	86701-40001	9	2	EXTRACTOR PC	28480	86701-40001
A4A1MP4	2950-0078	9	4	NUT-HEX-DEL-CHAM 10-32-THD .067-IN-THK	74163	500220
A4A1MP5	2200-0101	0	4	SCREW-MACH 4-40 .188-IN-LG PAN-HD-POZI	77250	
A4A1Q1	1853-0281	9	1	TRANSISTOR PNP 2N2907A SI TO-18 PD=400MW	04713	2N2907A
A4A1Q2	1854-0404	0	1	TRANSISTOR NPN SI TO-18 PD=360MW	04713	
A4A1Q3	1855-0050	4	1	TRANSISTOR-JFET DUAL N-CHAN D-MODE SI PD	34677	

**Indicates factory-selected value*

HP Part Number 85662-60122

A4A1 Video Processor

Reference Designatior	HP Part Number	C D	Qty	Description	Mfr Code	Mfr Part Number
A4A1Q4	1854-0404	(	1	TRANSISTOR NPN SI TO-18 PD=360MW	0471:	
A4A1Q5	1854-0404	(	1	TRANSISTOR NPN SI TO-18 PD=360MW	0471:	
A4A1Q6	1854-0404	(	1	TRANSISTOR NPN SI TO-18 PD=360MW	0471:	
A4A1Q7	1855-0213		1	TRANSISTOR-JFET DUAL N-CHAN D-MODE TO-7(	27014	2N5912
A4A1Q8	1853-0388	/	1	TRANSISTOR-DUAL PNP TO-78 PD=600MW	0471:	
A4A1Q9	1854-0378	7	1	TRANSISTOR NPN 2N5109 SI TO-39 PD=800MW	0471:	2N5109
A4A1Q10	1853-0281	9	1	TRANSISTOR PNP 2N2907A SI TO-18 PD=400M\	0471:	2N2907A
A4A1Q11	1853-0281	9	1	TRANSISTOR PNP 2N2907A SI TO-18 PD=400M\	0471:	2N2907A
A4A1Q12	1853-0281	9	1	TRANSISTOR PNP 2N2907A SI TO-18 PD=400M\	0471:	2N2907A
A4A1Q13	1853-0281	9	1	TRANSISTOR PNP 2N2907A SI TO-18 PD=400M\	04713	2N2907A
A4A1Q14	1854-0404	(	1	TRANSISTOR NPN SI TO-18 PD=360MW	0471:	
A4A1Q15	1854-0404	(	1	TRANSISTOR NPN SI TO-18 PD=360MW	04713	
A4A1Q16	1854-0404	(	1	TRANSISTOR NPN SI TO-18 PD=360MW	04713	
A4A1Q17	1854-0404	(	1	TRANSISTOR NPN SI TO-18 PD=360MW	04713	
A4A1Q18	1854-0404	(	1	TRANSISTOR NPN SI TO-18 PD=360MW	04713	
A4A1Q19	1854-0404	(	1	TRANSISTOR NPN SI TO-18 PD=360MW	04713	
A4A1Q20	1854-0404	(	1	TRANSISTOR NPN SI TO-18 PD=360MW	04713	
A4A1Q21	1854-0637	1	1	TRANSISTOR NPN 2N2219A SI TO-5 PD=800MW	04713	2N2219A
A4A1R1	0698-3443	(	1	RESISTOR 287 1% .125W TF TC=0+-100	19701	SFR25H
A4A1R2	2100-3109	2	1	RESISTOR-TRMR 2K 10% TKF SIDE-ADJ 17-TR\	73138	89PR2K
A4A1R3	0698-3510	2	1	RESISTOR 453 1% .125W TF TC=0+-100	19701	SFR25H
A4A1R4	0757-0442	9	1	RESISTOR 10K +-1% .125W TF TC=0+-100	19701	SFR25H
A4A1R5	0698-6880	5	1	RESISTOR 16K +-0.5% .125W TF TC=0+-50	19701	5033R
A4A1R6	0757-0442	9	1	RESISTOR 10K +-1% .125W TF TC=0+-100	19701	SFR25H
A4A1R7	0698-6755	3	1	RESISTOR 8K +-0.5% .125W TF TC=0+-50	19701	50331
A4A1R8	0757-0442	9	1	RESISTOR 10K +-1% .125W TF TC=0+-100	19701	SFR25H
A4A1R9	0698-6755	3	1	RESISTOR 8K +-0.5% .125W TF TC=0+-50	19701	5033R
A4A1R10*	0757-0422	5	1	RESISTOR 909 +-1% .125W TF TC=0+-100	19701	SFR25H
A4A1R11	0757-0403	2	1	RESISTOR 121 +-1% .125W TF TC=0+-100	19701	SFR25H
A4A1R12	0757-0159	5	1	RESISTOR 1K +-1% .5W TF TC=0+-100	19701	5053R
A4A1R13	0698-3153	9	1	RESISTOR 3.831: 1% .125W TF TC=0+-100	19701	SFR25H
A4A1R14	2100-3056	8	1	RESISTOR-TRMR 5K 10% TKF SIDE-ADJ 17-TR\	73138	89PR5K
A4A1R15	0698-6330	0	1	RESISTOR 2K +-1% .125W TF TC=0+-25	19701	5033R
A4A1R16	3757-0394	0	1	RESISTOR 51.1 +-1% .125W TF TC=0+-100	19701	SFR25H
A4A1R17	1698-4211	7	1	!ESISTOR 158K 1% .125W TF TC=0+-100	19701	SFR25H
A4A1R18	1698-3155	1	1	!ESISTOR 4.641: 1% .125W TF TC=0+-100	19701	SFR25H
A4A1R19	1698-3158	4	1	!ESISTOR 23.7K 1% .125W TF TC=0+-100	19701	SFR25H
A4A1R20	1698-3158	4	1	!ESISTOR 23.7K 1% .125W TF TC=0+-100	19701	SFR25H
A4A1R21	1698-3240	5	1	!ESISTDR 500 .25% .125W TF TC=0+-50	19701	5033R
A4A1R22	1698-7799	7	1	!ESISTOR 2K +-0.25% .125W TF TC=0+-100	19701	50331
A4A1R23	1698-7799	7	1	!ESISTDR 2K +-0.25% .125W TF TC=0+-100	19701	5033R
A4A1R24	1698-7839	5	1	!ESISTOR 222 +-0.5% .125W TF TC=0+-50	19701	5033R
A4A1R25	1698-3240	5	1	!ESISTOR 500 .25% .125W TF TC=0+-50	19701	5033R
A4A1R26	1698-7799	7	1	!ESISTOR 2K +-0.25% .125W TF TC=0+-100	19701	5033R
A4A1R27	0757-0274	5	1	!ESISTOR 1.21K +-1% .125W TF TC=0+-100	19701	SFR25H
A4A1R28	0757-0274	5	1	!ESISTOR 1.21K +-1% .125W TF TC=0+-100	19701	SFR25H
A4A1R29	0757-0200	7	1	!ESISTOR 5.621: +-1% .125W TF TC=0+-100	19701	SFR25H
A4A1R30	0757-0438	3	1	!ESISTOR 5.11K +-1% .125W TF TC=0+-100	19701	SFR25H

**Indicates factory-selected value*

HP Part Number 85662-60122

A4A1 Video Processor

Reference Designation	HP Part Number	CD	Qty	Description	Mfr Code	Mfr Part Number
A4A1R31	0698-3444	1	1	RESISTOR 316 1% .125W TF TC=0+-100	19701	SFR25H
A4A1R32	2100-3154	7	1	RESISTOR-TRMR 1K 10% TKF SIDE-ADJ 17-TRN	73138	89PR1K
A4A1R33	0757-0274	5	1	RESISTOR 1.21K +-1% .125W TF TC=0+-100	19701	SFR25H
A4A1R34	0698-5552	6	1	RESISTOR 1K +-1% .125W TF TC=0+-25	91637	CMF-55-1, T-9
A4A1R35	0698-3275	6	1	RESISTOR 2.5K 1% .125W TF TC=0+-25	19701	5033R
A4A1R36	2100-3056	8	1	RESISTOR-TRMR 5K 10% TKF SIDE-ADJ 17-TRN	73138	89PR5K
A4A1R37	0698-0084	9	1	RESISTOR 2.15K 1% .125W TF TC=0+-100	19701	SFR25H
A4A1R38	0698-0084	9	1	RESISTOR 2.15K 1% .125W TF TC=0+-100	19701	SFR25H
A4A1R39	0698-0084	9	1	RESISTOR 2.15K 1% .125W TF TC=0+-100	19701	SFR25H
A4A1R40	0698-0085	0	1	RESISTOR 2.61K 1% .125W TF TC=0+-100	19701	SFR25H
A4A1R41	0698-0085	0	1	RESISTOR 2.61K 1% .125W TF TC=0+-100	19701	SFR25H
A4A1R42	0757-0290	5	1	RESISTOR 6.19K +-1% .125W TF TC=0+-100	19701	SFR25H
A4A1R43	0698-3155	1	1	RESISTOR 4.641: 1% .125W TF TC=0+-100	19701	SFR25H
A4A1R44	0698-3158	4	1	RESISTOR 23.71: 1% .125W TF TC=0+-100	19701	SFR25H
A4A1R45	0698-3155	1	1	RESISTOR 4.641; 1% .125W TF TC=0+-100	19701	SFR25H
A4A1R46	0698-3158	4	1	RESISTOR 23.71: 1% .125W TF TC=0+-100	19701	SFR25H
A4A1R47	0698-3155	1	1	RESISTOR 4.64K 1% .125W TF TC=0+-100	19701	SFR25H
A4A1R48	0698-3158	4	1	RESISTOR 23.71: 1% .125W TF TC=0+-100	19701	SFR25H
A4A1R49	0757-0442	9	1	RESISTOR 10K +-1% .125W TF TC=0+-100	19701	SFR25H
A4A1R50	0698-5577	5	1	RESISTOR 2.5K +-0.5% .125W TF TC=0+-100	91637	CMF-55-1, T-1
A4A1R51	0757-0416	7	1	RESISTOR 511 +-1% .125W TF TC=0+-100	19701	SFR25H
A4A1R52	0698-3155	1	1	RESISTOR 4.64K 1% .125W TF TC=0+-100	19701	SFR25H
A4A1R53	0698-3155	1	1	RESISTOR 4.641: 1% .125W TF TC=D+-100	19701	SFR25H
A4A1R54	0698-3445	2	1	RESISTOR 348 1% .125W TF TC=0+-100	19701	SFR25H
A4A1R55	0698-3155	1	1	RESISTOR 4.64K 1% .125W TF TC=0+-100	19701	SFR25H
A4A1R56	0698-0085	0	1	RESISTOR 2.61K 1% .125W TF TC=0+-100	19701	SFR25H
A4A1R57	0757-0416	7	1	RESISTOR 511 +-1% .125W TF TC=0+-100	19701	SFR25H
A4A1R58	0757-0442	9	1	RESISTOR 10K +-1% .125W TF TC=0+-100	19701	SFR25H
A4A1R59	0757-0401	0	1	RESISTOR 100 +-1% .125W TF TC=0+-100	19701	SFR25H
A4A1R60	0757-0437	2	1	RESISTOR 4.751: +-1% .125W TF TC=0+-100	19701	SFR25H
A4A1R61	0698-4123	5	1	RESISTOR 499 1% .125W TF TC=0+-100	19701	SFR25H
A4A1R62	0757-0280	3	1	RESISTOR 1K +-1% .125W TF TC=0+-100	19701	SFR25H
A4A1R63	0698-4376	0	1	RESISTOR 32.4 +-1% .125W TF TC=0+-100	91637	CMF-55-1, T-1
A4A1R64	0698-3445	2	1	RESISTOR 348 1% .125W TF TC=0+-100	19701	SFR25H
A4A1R65	0757-0437	2	1	RESISTOR 4.751: +-1% .125W TF TC=0+-100	19701	SFR25H
A4A1R66	0757-0289	2	1	RESISTOR 13.3K +-1% .125W TF TC=0+-100	19701	SFR25H
4A1R67*	0757-0459	8	1	RESISTOR 56.2K +-1% .125W TF TC=0+-100	19701	SFR25H
4A1TP1	1251-0600	0	1	CONNECTOR-SGL CONT PIN 1.14-MM-BSC-SZ SQ	27264	16-06-0034
4A1TP2	1251-0600	0	1	CONNECTOR-SGL CONT PIN 1.14-MM-BSC-SZ SQ	27264	16-06-0034
4A1TP3	1251-0600	0	1	CONNECTOR-SGL CONT PIN 1.14-MM-BSC-SZ SQ	27264	16-06-0034
4A1U1	5081-8117	3	1	SCREENED 1826-0092 IC OPAMP	28480	5081-8117
4A1U2	1826-0089	8	1	IC DP AMP WB TO-99 PKG	34371	HA2-2525-5 (SELECTED)
4A1U3	1826-0021	8	1	IC DP AMP GP TO-99 PKG	27014	LM310H
4A1U4	1826-0417	6	1	ANALOG SWITCH 4 SPST 16 -CBRZ/SDR	27014	LF13333D
4A1U5	1810-0215	9	1	NETWORK-RES 8-SIP 75.0K OHM X 7	11236	750-81
4A1U6	1826-1058	3	1	IC DP AMP GP 8-TO-99 PKG	06665	OP-02CJ
4A1U7	1826-1020	9	1	ANALOG SWITCH 2 SPST 10 -METAL	17856	DG200ABA

**Indicates factory-selected value*

HP Part Number 85662-60122

A4A1 Video Processor

Reference Designatior	HP Part Number	CD	Qty	Description	Mfr Code	Mfr Part Number
A4A1U8	1820-1216	3	1	IC DCDR TTL LS 3-TO-8-LINE 3-INP	0129[illegible]	SN74LS138N
A4A1U10	1820-0586	8	1	IC INV TTL L HEX 1-INP	2701[illegible]	DM74L04N
A4A1U11	1820-1272		1	IC BFR TTL LS NOR QUAD 2-INP	0129[illegible]	SN74LS33N
A4A1VR1	1902-0686		1	DIODE-ZNR 6.2V 2% DO-7 PD=.4W TC=+.002%	0471[illegible]	1N825
A4A1VR2	1902-0686		1	DIODE-ZNR 6.2V 2% DO-7 PD=.4W TC=+.002%	0471[illegible]	1N825

Analyzer Repair Inc.

**Indicates factory-selected value*

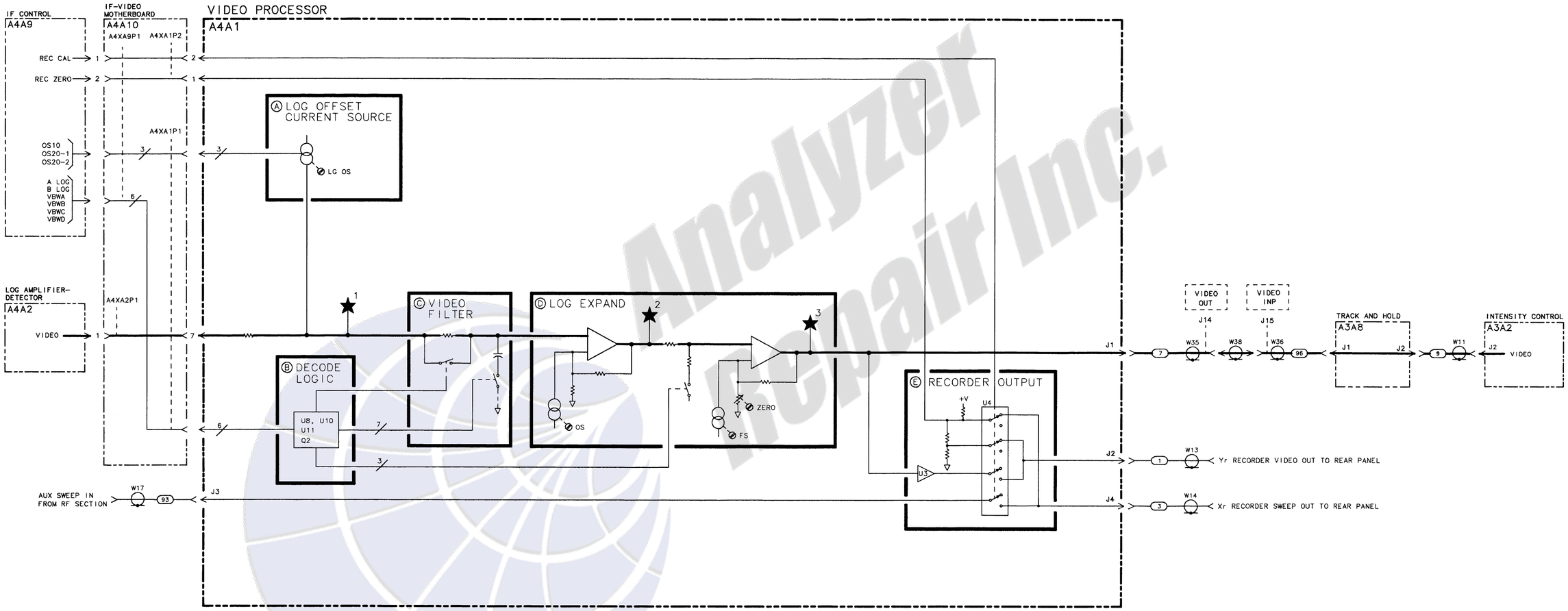

A4A1 VIDEO PROCESSOR, BLOCK DIAGRAM

Analyzer Repair Inc.

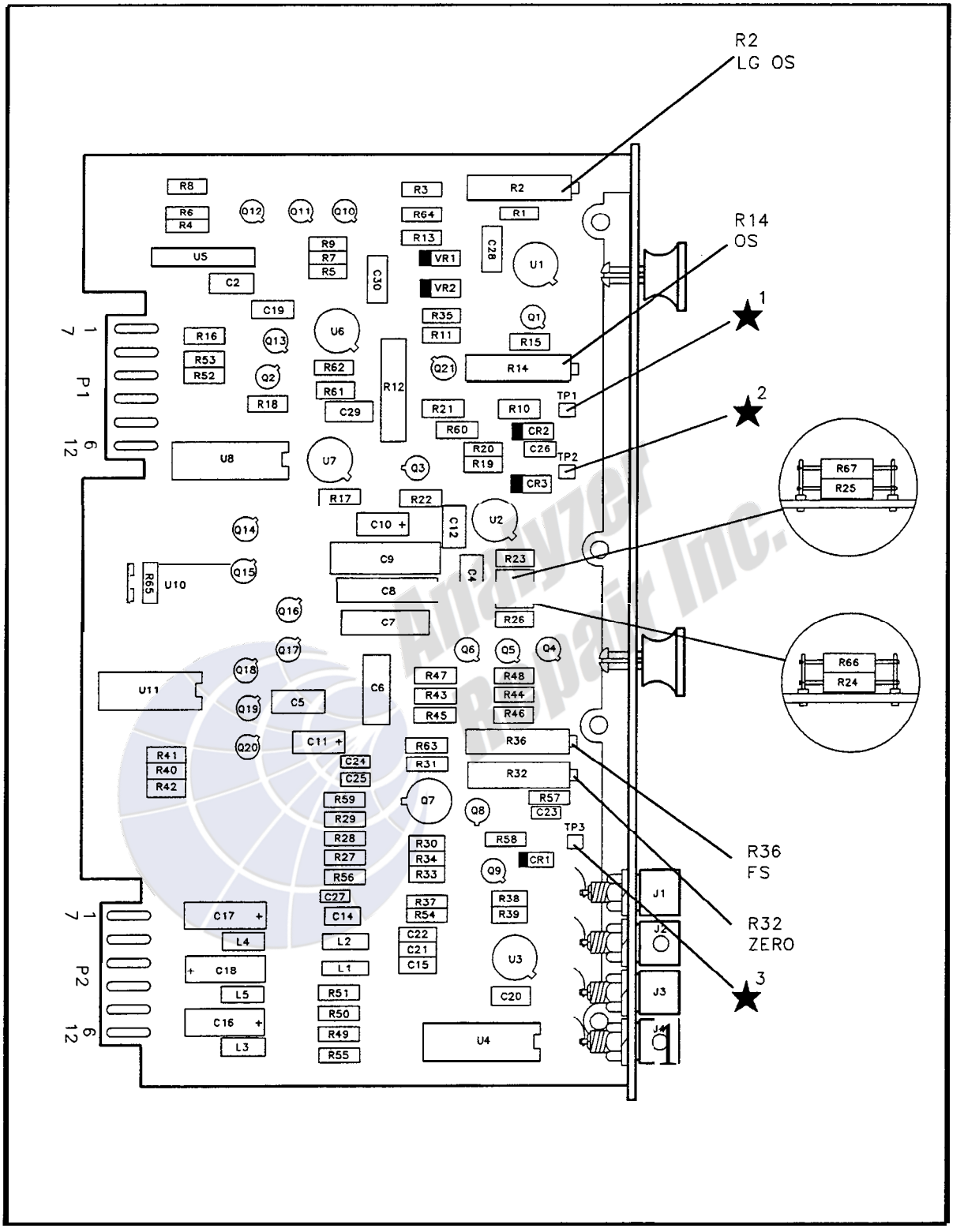

A4A1 Video Processor Component Locations, 85662-60122

A4A1 VIDEO PROCESSOR
85662-60122
(SERIAL PREFIX: 2403A)

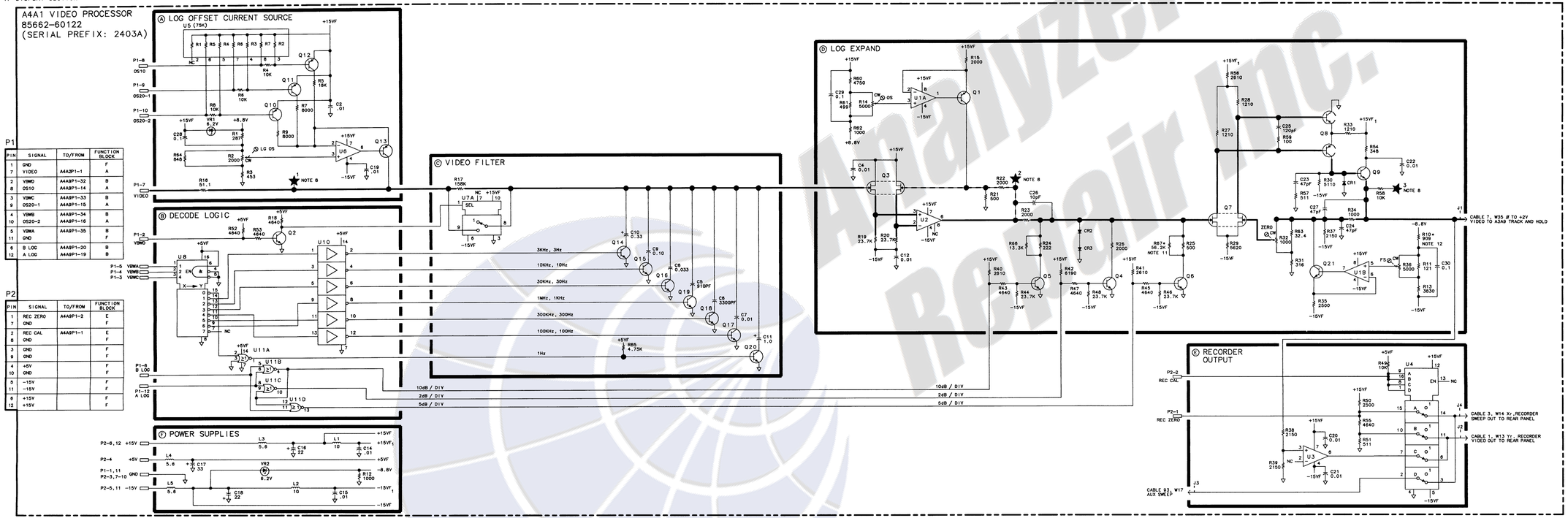

P1 PIN	SIGNAL	TO/FROM	FUNCTION BLOCK
1	GND		F
7	VIDEO	A4A3P1-1	A
2	VBMD	A4A3P1-32	B
8	OS10	A4A3P1-14	A
3	VBMC	A4A3P1-33	B
9	OS20-1	A4A3P1-15	A
4	VBMB	A4A3P1-34	B
10	OS20-2	A4A3P1-16	A
5	VBMA	A4A3P1-35	B
11	GND		F
6	B LOG	A4A3P1-20	B
12	A LOG	A4A3P1-19	B

P2 PIN	SIGNAL	TO/FROM	FUNCTION BLOCK
1	REC ZERO	A4A3P1-2	E
7	GND		F
2	REC CAL	A4A3P1-1	E
8	GND		F
3	GND		F
9	GND		F
4	+5V		F
10	GND		F
5	-15V		F
11	-15V		F
6	+15V		F
12	+15V		F

NOTES:

1. REFERENCE DESIGNATORS WITHIN THIS ASSEMBLY ARE ABBREVIATED. FOR COMPLETE REFERENCE DESIGNATION, PREFIX ABBREVIATION WITH ASSEMBLY DESIGNATION.
2. UNLESS OTHERWISE INDICATED: RESISTANCE IS IN OHMS (Ω) CAPACITANCE IS IN MICROFARADS(μF) INDUCTANCE IS IN MICROHENRIES(μH)
3. MNEMONIC TABLE:

MNEMONIC	DESCRIPTION
VBMA	VIDEO BANDWIDTH (LSB)
VBMB	VIDEO BANDWIDTH
VBMC	VIDEO BANDWIDTH
VBMD	VIDEO BANDWIDTH (MSB)
A LOG	LOG SCALE (LSB)
B LOG	LOG SCALE (MSB)
OS10	LOG OFFSET 10dB
OS20-1	LOG OFFSET 20dB-1
OS20-2	LOG OFFSET 20dB-2
REC ZERO	RECORDER LOWER LEFT
REC CAL	RECORDER LOWER LEFT OR UPPER RIGHT
VIDEO	DETECTED IF SIGNAL

4. UNLESS OTHERWISE INDICATED, LOGIC LEVELS ARE TTL:
   +0.0V TO +5.0V = "1" = HIGH
   0V TO +0.8V = "0" = LOW
5. OFFSET GAIN STEPS TRUTH TABLE:

LOG REF LEVEL	RES BW 3kHz	OS10	OS20-1	OS20-2
RES BW 2.93kHz				
-70 TO -79.9dBM	-80 TO -99.9	0V	>+14V	>+14V
-80 TO 89.9dBM	-100 TO -109.9	>+14V	0V	>+14V
-90 TO -99.9dBM	-110 TO -119.9	0V	0V	>+14V
-100 TO -109.9dBM	-120 TO -129.9	>+14V	0V	0V
-110 TO -119.9dBM	-130 TO -139.9	0V	0V	0V

   INPUT ATTENUATOR 0dB SHIFT ATTENUATOR (FOR EXTENDED RANGE)
6. VIDEO BANDWIDTH TRUTH TABLE:

VIDEO BANDWIDTH	VBMD	VBMC	VBMB	VBMA
3MHz	H	H	H	L
1MHz	H	H	H	L
300kHz	H	H	L	H
100kHz	H	H	L	L
30kHz	H	L	H	H
10kHz	H	L	H	L
3kHz	H	L	L	H
1kHz	L	H	H	H
300Hz	L	H	H	L
100Hz	L	H	L	H
30Hz	L	L	H	H
10Hz	L	L	H	L
3Hz	L	L	L	H
1Hz	L	L	L	L

7. LOG EXPAND TRUTH TABLE:

LOG SCALE	B LOG	A LOG
10 dB / DIV	L	L
5 dB / DIV	L	H
2 dB / DIV	H	L
1 dB / DIV	H	H

8. LOG EXPAND FIDELITY TABLE
   INSTRUMENT CONTROL SETTINGS ARE AS FOLLOWS:
   INSTRUMENT PRESET
   CENTER FREQUENCY 20 MHz
   FREQUENCY SPAN 0 Hz
   ATTENUATOR 0 dB
   CONNECT 3550 ATTENUATOR BETWEEN CALIBRATOR OUTPUT AND SIGNAL

EXTERNAL ATTENUATOR	TP1	TP2	TP3
0dB	+1V	0V	+2V
50dB	+0.5V	-2.5V	+1V
50dB+	0V	-5V	0V
+PUSH LINEAR BUTTON			

9. RECORDER OUTPUT TABLE:

	REC CAL	REC ZERO	J4 OUTPUT	J2 OUTPUT
LOWER LEFT ACTIVATED	0V	0V	0V	0V
UPPER RIGHT ACTIVATED	0V	+10V	+10V	+1V
RECORDER LIMITS NOT ACTIVATED	+5V	+10V	SWEEP	VIDEO

10. UNLESS OTHERWISE INDICATED: SIGNALS ENTER AT LEFT SIDE OR TOP AND EXIT RIGHT SIDE OR BOTTOM OF FUNCTION BLOCKS.
11. R67= IS A FACTORY-SELECTED COMPONENT. ACCEPTABLE VALUES RANGE FROM 56.2KΩ TO 825KΩ .
12. R10= IS A FACTORY-SELECTED COMPONENT. ACCEPTABLE VALUES RANGE FROM 562Ω TO 1330Ω .

A4A1

FIGURE 6. A4A1 VIDEO PROCESSOR ASSEMBLY , SCHEMATIC DIAGRAM

A4A2

A4A2 Log Amplifier-Detector, Circuit Description

A4A2 Log Amplifier-Detector Assembly contains the last four of the nine log amplifier stages. (The first five stages are in A4A3 Log Amplifier-Filter.) The first two stages in this assembly (Stage 6 and Stage 7) are also used in linear mode as a switchable 20 dB gain step. Following the last log stage, the 21.4 MHz IF signal is applied to a PIN diode attenuator. In log mode, this attenuation is varied with temperature to compensate for bias variations in the log stages. After passing through the PIN attenuator, the IF signal is detected to produce the vertical (video) signal which is applied to A4A1 Video Processor. The 21.4 MHz signal is attenuated and sent to the 21.4 MHz IF OUTPUT connector on the rear panel.

The control circuit of A4A2 contains log/linear switching circuitry and 20 dB linear gain step switching circuitry. Also contained in A4A2 is a temperature-dependent power supply which biases the log stages in A4A2 and A4A3. A similar temperature-dependent bias supply controls the attenuation of the PIN Diode Attenuator.

Log Amplifier Stages Ⓐ

A4A2 contains the last four of the nine log amplifier stages. (Refer to A4A3 Log Amplifier-Filter for a description of log amplifier stages.) The operation of each stage is essentially identical to that of the log stages in A4A3.

LOG Mode

In LOG mode, the LOG/LIN control line from A4A9 IF Control is high (about +7 V). Q9 is turned on, connecting the log diode bias resistor of each stage to the -12 VTV supply through CR16 and CR18. Q8 is off and PIN diodes CR12 and CR15 are reverse biased through R50. The LG20 control line from A4A9 IF Control Assembly is low in LOG mode, so Q10 is off and CR6 and CR9 are reverse biased. Thus all log diodes are on, and linear gain PIN diodes are off. The logged IF signal is applied through Q14 to the PIN Diode Attenuator, the Detector, and the Counter Output Limiter.

LINEAR Mode

Each of the log stages in this assembly provides linear gain through the use of a switchable PIN diode signal path. In LINEAR mode, the LOG/LIN control line is pulled to the -12 VTV supply through R101. This turns off Q9, removing the bias current from all log diodes. As the Q9 collector is pulled high through R46, the Q8 collector saturates to the -12 VTV supply, forward biasing PIN diodes CR2 and CR15 through CR21 in Log Amplifier Stages 8 and 9. Since PIN diode resistance is not affected by signal level, Stages 8 and 9 become non-limiting amplifiers with combined gain of approximately 15 dB. R36 is factory selected to adjust the gain of Stage 9 in LINEAR mode. This gain is necessary to obtain a 1 V (full screen) video output in linear mode at approximately the same input level to the IF module that causes a 1 V (full screen) output in LOG mode.

20 dB Linear Gain Step

Stages 6 and 7 are used as a switchable 20 dB gain step in LINEAR mode at low reference levels. When the LG20 control line is high (more positive than -5 V), the Q10 collector saturates to the -12 VTV supply, turning on PIN diodes CR6 and CR9 in Log Amplifier Stages 6 and 7. Stage 6 and 7 each provide approximately 10 dB of non-limiting gain when LG20 is high. The combined gain of stages 6 and 7 is adjusted to 20 dB by varying the resistance of CR6. R14 sets the bias current and thus the resistance of CR6.

Pin Diode Attenuator ©

In LOG mode, attenuation of the PIN Diode Attenuator is varied with temperature to compensate for bias variations with temperature in the Log Amplifier Stages. The attenuation is removed in the LINEAR mode.

LOG Mode

In LOG mode, Q7 is turned off because Q8 is off. CR30 is forward biased by the LOG/LIN control line through R63. PIN diodes CR28 and CR29 are forward biased by U1B through R62 and R61. PIN diodes CR26 and CR27 operate with fixed bias current through R56 and R57. CR26 through CR29 form a resistive voltage divider with CR28 and CR29 operating as a variable resistance. Op amp U1, which biases CR28 and CR29, is a temperature dependent voltage source. The voltage at U1 pin 7 becomes more negative as temperature increases, causing the attenuation to increase. The attenuation of the PIN Diode Attenuator is set by R61 (refer to ATTEN and -12 VTV Adjustments).

LINEAR Mode

In LINEAR mode, Q90 is off and Q8 and Q7 are on. Q7 supplies additional drive for CR26 and CR27 through R58. This biases CR26 and CR27 so that their resistance is small (<50Ω total). CR28 and CR29 are reverse biased through R63, since LOG/LIN is pulled to -12 VTV in linear mode. There is no attenuation, and the signal from Q14 is coupled directly to emitter follower Q5.

Detector Driver

The signal output from the PIN Diode attenuator is applied to emitter follower Q5, which provides low-impedance drive for the Detector. Bias for Q5 is supplied by R65, which with R64 forms a voltage divider for the signal from the Q5 emitter. The signal at J1 is linearly related to the displayed vertical signal in both LINEAR and LOG modes. The signal is sent by coax cable to the 21.4 MHz IF OUTPUT connector on the rear panel.

Temperature-Dependent Regulators Ⓓ

The -12 VTV and PIN Diode Regulators provide temperature compensation for the Log Amplifier Stages. CR37 and CR38 operate as the temperature sensing elements to control the two voltages. U1A controls Q11 to regulate the -12 VTV supply, which provides a nominal -12 V to a filter network for distribution throughout the Log Amplifier assemblies. The -12 VTV voltage is adjusted to provide proper log fidelity; it becomes more negative as temperature increases to correct for variations in log diode resistance. U1B produces a nominal -7 V and forms the current source for CR28 and CR29 in the PIN Diode Attenuator. The voltage of U1B pin 7 becomes more negative as temperature increases to control the attenuation of the PIN Diode Attenuator.

ATTEN © and -12 VTV Adjustments Ⓓ

The PIN Diode Attenuator adjustment (ATTEN potentiometer R61) is essentially a gain adjustment that varies the slope of the log curve. The -12 VTV adjustment (-12 VTV potentiometer R91 in the Temperature-Dependent Regulators circuit) varies the offset and slope of the log curve. These two adjustments (which interact) are used to set the output versus input curve in log mode. The IF input signal level, which causes a 1 V (full screen) output in LINEAR mode, is used as a reference for full-scale deflection in LOG mode. The ATTEN and -12 VTV adjustments are made to give a 1 V video output in both LOG and LINEAR modes for the same IF input signal level, and a 100 mV video output change for a 10 dB IF signal change in LOG mode.

Detector Ⓔ

Q1 through Q4nd associated circuitry form a full wave rectifier to convert the IF signal to a video signal. Q4 is the current driver for the detector and converts voltage variations at the Q5 emitter to current variations which drive Q2 and Q3. Q3 is a half wave rectifier and conducts when the signal at the Q5 emitter is positive. The Q3 collector current is applied to the low-pass filter consisting of R75, R76, L12 through L14, and C51 through C54. When the signal at the Q5 collector goes negative, current generated in the Q4 collector is pulled out of the Q2 emitter. Q1 forms a current mirror, which drives current into the low-pass filter when Q2 collector current flows. Thus current flows into the low-pass filter on both positive and negative halves of the IF signal at the Q5 emitter. CR31, CR32, CR33, and R72 keep Q2 and Q3 biased slightly below cutoff. When current flows into the low-pass filter from Q1 or Q3, a positive voltage is developed across R75 and R76. The voltage developed is proportional to the IF signal level at the Q5 emitter. The low-pass filter has a bandwidth of about 7 MHz to remove IF frequencies from the detected video output signal. The detected voltage is applied to unity gain buffer amplifier Q12 and Q13 to drive A4A1 Video Processor. The offset of differential pair Q12 is removed by ZERO adjustment R79.

Counter Output Limiter Ⓕ

The Counter Output Limiter provides an amplitude-limited signal at the IF frequency used for frequency counting. The IF signal from detector driver Q5 is buffered by Q6. CR35 and CR36 are biased to cutoff for signal levels corresponding to greater than a one-division display. In LOG or LINEAR mode, the counter output remains at approximately -30 dBm for signal levels displayed in the top nine divisions of the display.

A4A2 Log Amplifier-Detector, Troubleshooting

If the amplitude of the displayed signals is approximately 10 dB low (CAL OUTPUT appears to be -20 dBm) in the log mode but correct in the linear display mode, then one of the log amplifier stages in the A4A3 Log Amplifier-Filter board or the A4A2 Log Amplifier-Detector board is defective. Connect a 10 dB step attenuator between the CAL OUTPUT and the spectrum analyzer input. Refer to the Log Amplifier Stage Gain Check note on the service sheets for the necessary front-panel control settings. When forward biased in log mode, the Schottky diodes should have voltage drops of 200 to 400 mV.

The following procedure will determine if the Linear Gain Steps, LG10 and LG20, are operating properly. The LG10 circuitry is located on the A4A3 Log Amplifier-Filter board while the LG20 circuitry is located on the A4A2 Log Amplifier-Detector board. Connect a 10 dB step attenuator set to 0 dB between the CAL OUTPUT and the spectrum analyzer input. Press Instrument Preset and key in the following settings:

(CENTER FREQUENCY) ..... equal to the CAL OUTPUT frequency

(FREQUENCY SPAN) ..... 10 kHz

(RES.BW.) ..... 3 kHz

(ATTEN) ..... 0 dB

(SHIFT) LOG SCALE (ENTER dB/DIV) (Turns off IF Step Gains)

(REFERENCE LEVEL) ..... −60 dBm

SCALE LIN

The peak of the displayed signal should be on the top graticule. Adjust the front panel AMPTD CAL control to place the peak of the signal one division below the top graticule. If the signal limits at the top of the display, one of the Linear Gain Steps is stuck in the on state.

Set the 10 dB step attenuator to 10 dB and key in (REFERENCE LEVEL) -70 dBm. The peak of the displayed signal should be one division below the top graticule. If signal limits at the top of the display, the LG20 circuitry is defective. A signal approximately 3 divisions high indicates the LG10 circuitry is defective.

Set the 10 dB step attenuator to 20 dB and key in (REFERENCE LEVEL) -80 dBm. The peak of the displayed signal should be one division below the top graticule. The LG10 circuitry is defective if the signal limits at the top of the display. The LG20 circuitry is faulty if the displayed signal is approximately 3 divisions high.

The detector circuit on the A4A2 Log Amplifier-Detector board is most easily checked with dc voltages. These are derived using 0 Hz (CENTER FREQUENCY) and attenuating the CAL OUTPUT signal. The easiest point to check the Detector output without removing boards is A4A1TP1. Connect a DVM to this test point. The voltage at A4A1TP1 should be +1 V for a signal displayed on the top graticule. The output will be 0.1 V less for each division down from the top in either the linear or the 10 dB/DIV log modes when the detector is operating properly.

Analyzer Repair Inc.

HP Part Number 85662-60132

A4A2 Log Amplifier-Detector

Reference Designation	HP Part Number	D	Qty	Description	Mfr Code	Mfr Part Number
A4A2	85662-60132		1	BOARD ASSEMBLY, LOG AMPLIFIER-DETECTOR (SERIAL PREFIX: 2403A-2517A)	2848(	85662-60132
A4A2C3	0160-2055		1	CAPACITOR-FXD .01UF +80-20% 100VDC CER		805-504 Y5V 1032
A4A2C4	0160-2055		1	CAPACITOR-FXD .01UF +80-20% 100VDC CER		805-504 Y5V 1032
A4A2C5	0160-2055		1	CAPACITOR-FXD .01UF +80-20% 100VDC CER		805-504 Y5V 1032
A4A2C6	0160-2055		1	CAPACITOR-FXD .01UF +80-20% 100VDC CER		805-504 Y5V 1032
A4A2C7	0160-2055		1	CAPACITOR-FXD .01UF +80-20% 100VDC CER		805-504 Y5V 103Z
A4A2C8	0160-2055		1	CAPACITOR-FXD .01UF +80-20% 100VDC CER		805-504 Y5V 103Z
A4A2C9	0160-2055		1	CAPACITOR-FXD .01UF +80-20% 100VDC CER		805-504 Y5V 1032
A4A2C10	0160-2055		1	CAPACITOR-FXD .01UF +80-20% 100VDC CER		805-504 Y5V 1032
A4A2C11	0160-2055		1	CAPACITOR-FXD .01UF +80-20% 100VDC CER		805-504 Y5V 1032
A4A2C12	0160-2055		1	CAPACITOR-FXD .01UF +80-20% 100VDC CER		805-504 Y5V 1032
A4A2C13	0160-2055		1	CAPACITOR-FXD .01UF +80-20% 100VDC CER		805-504 Y5V 1032
A4A2C14	0160-2055		1	CAPACITOR-FXD .01UF +80-20% 100VDC CER		805-504 Y5V 1032
A4A2C15	0160-2055		1	CAPACITOR-FXD .01UF +80-20% 100VDC CER		805-504 Y5V 1032
A4A2C16	0160-2055		1	CAPACITOR-FXD .01UF +80-20% 100VDC CER		805-504 Y5V 103Z
A4A2C17	0160-2055		1	CAPACITOR-FXD .01UF +80-20% 100VDC CER		805-504 Y5V 1032
A4A2C18	0160-2055		1	CAPACITOR-FXD .01UF +80-20% 100VDC CER		805-504 Y5V 1032
A4A2C19	0160-2055		1	CAPACITOR-FXD .01UF +80-20% 100VDC CER		805-504 Y5V 103Z
A4A2C20	0160-2055		1	CAPACITOR-FXD .01UF +80-20% 100VDC CER		805-504 Y5V 103Z
A4A2C21	0160-2055		1	CAPACITOR-FXD .01UF +80-20% 100VDC CER		805-504 Y5V 1032
A4A2C22	0160-2055		1	CAPACITOR-FXD .01UF +80-20% 100VDC CER		805-504 Y5V 1032
A4A2C23	0160-2055		1	CAPACITOR-FXD .01UF +80-20% 100VDC CER		805-504 Y5V 1032
A4A2C24	)160-2055		1	CAPACITOR-FXD .01UF +80-20% 100VDC CER		805-504 Y5V 103Z
A4A2C25	)160-2055		1	CAPACITOR-FXD .01UF +80-20% 100VDC CER		805-504 Y5V 1032
A4A2C26	)160-2055		1	CAPACITOR-FXD .01UF +80-20% 100VDC CER		805-504 Y5V 1032
A4A2C27	)160-2055		1	CAPACITOR-FXD .01UF +80-20% 100VDC CER		805-504 Y5V 103Z
A4A2C28	)160-2055		1	CAPACITOR-FXD .01UF +80-20% 100VDC CER		805-504 Y5V 103Z
A4A2C29	)160-2055		1	CAPACITOR-FXD .01UF +80-20% 100VDC CER		805-504 Y5V 103Z
A4A2C30	)160-2055		1	CAPACITOR-FXD .01UF +80-20% 100VDC CER		805-504 Y5V 103Z
A4A2C32	)160-2055		1	CAPACITOR-FXD .01UF +80-20% 100VDC CER		805-504 Y5V 1032
A4A2C33	)160-2055		1	CAPACITOR-FXD .01UF +80-20% 100VDC CER		805-504 Y5V 1032
A4A2C34	)160-2055		1	CAPACITOR-FXD .01UF +80-20% 100VDC CER		805-504 Y5V 1032
A4A2C36	1160-2055		1	CAPACITOR-FXD .01UF +80-20% 100VDC CER		805-504 Y5V 1032
A4A2C37	)160-2055		1	CAPACITOR-FXD .01UF +80-20% 100VDC CER		805-504 Y5V 1032
A4A2C38	)160-2055		1	CAPACITOR-FXD .01UF +80-20% 100VDC CER		805-504 Y5V 1032
A4A2C39	)160-2055		1	CAPACITOR-FXD .01UF +80-20% 100VDC CER		805-504 Y5V 1032
A4A2C40	)160-2055		1	CAPACITOR-FXD .01UF +80-20% 100VDC CER		805-504 Y5V 103Z
A4A2C41	)160-2055		1	CAPACITOR-FXD .01UF +80-20% 100VDC CER		805-504 Y5V 103Z
A4A2C42	)160-2055		1	CAPACITOR-FXD .01UF +80-20% 100VDC CER		805-504 Y5V 1032
A4A2C43	)160-2055		1	CAPACITOR-FXD .01UF +80-20% 100VDC CER		805-504 Y5V 1032
A4A2C44	)160-4084		1	:AP-FXD 0.1uF 50 V	56289	1C20X7R104M050B
A4A2C46	)160-2055		1	CAPACITOR-FXD .01UF +80-20% 100VDC CER		805-504 Y5V 1032
A4A2C48	)160-2055		1	CAPACITOR-FXD .01UF +80-20% 100VDC CER		805-504 Y5V 103Z
A4A2C49	)160-2055		1	CAPACITOR-FXD .01UF +80-20% 100VDC CER		805-504 Y5V 1032
A4A2C50	)160-2055		1	CAPACITOR-FXD .01UF +80-20% 100VDC CER		805-504 Y5V 1032
A4A2C51	)160-2262		1	:AP-FXD 16pF 500 V	52763	

**Indicates factory-selected value*

HP Part Number 85662-60132

A4A2 Log Amplifier-Detector

Reference Designation	HP Part Number	C D	Qty	Description	Mfr Code	Mfr Part Number
A4A2C52	0160-2200	6	1	CAPACITOR-FXD 43PF +-5% 300VDC MICA -20/	0902:	CD15ED430J03
A4A2C53	0160-2307	4	1	CAPACITOR-FXD 47PF +-5% 300VDC MICA -20/	0902:	CD15ED470J03
A4A2C54	0160-2205	1	1	CAPACITOR-FXD 120PF +-5% 300VDC MICA 0+7	0902:	CD15FD121J03
A4A2C55	0160-2055	9	1	CAPACITOR-FXD .01UF +80-20% 100VDC CER		805-504 Y5V 103Z
A4A2C59	0160-2055	9	1	CAPACITOR-FXD .01UF +80-20% 100VDC CER	2848(	0160-2055
A4A2C62	0160-2055	9	1	CAPACITOR-FXD .01UF +80-20% 100VDC CER		805-504 Y5V 1032
A4A2C63	0160-2055	9	1	CAPACITOR-FXD .01UF +80-20% 100VDC CER		805-504 Y5V 103Z
A4A2C64	0160-2055	9	1	CAPACITOR-FXD .01UF +80-20% 100VDC CER		805-504 Y5V 1032
A4A2C65	C1160-2055	9	1	CAPACITOR-FXD .01UF +80-20% 100VDC CER		805-504 Y5V 1032
A4A2C66	0180-0228	6	1	CAPACITOR-FXD 22UF+-10% 15VDC TA	56289	150D226X9015B2-DYS
A4A2C68	C1160-4297	5	1	CAPACITOR-FXD .022UF +80-20% 100VDC CER		562CZC101AH223ZA23
A4A2C69	C1160-4297	5	1	CAPACITOR-FXD .022UF +80-20% 100VDC CER		562CZC101AH223ZA23
A4A2C70	0160-4297	5	1	CAPACITOR-FXD .022UF +80-20% 100VDC CER		562CZC101AH223ZA23
A4A2C71	0160-4297	5	1	CAPACITOR-FXD .022UF +80-20% 100VDC CER		562CZC101AH223ZA23
A4A2C72	C1160-4297	5	1	CAPACITOR-FXD .022UF +80-20% 100VDC CER		562CZC101AH223ZA23
A4A2C73	0160-4297	5	1	CAPACITOR-FXO .022UF +80-20% 100VDC CER		562CZC101AH223ZA23
A4A2C74	0160-2055	9	1	CAPACITOR-FXD .01UF +80-20% 100VDC CER		805-504 Y5V 1032
A4A2C75	0160-4297	5	1	CAPACITOR-FXD .022UF +80-20% 100VDC CER		562CZC101AH223ZA23
A4A2CR4	1901-1085	6	1	DIODE-SCHOTTKY SM SIG	28480	
A4A2CR5	1901-1085	6	1	DIODE-SCHOTTKY SM SIG	28480	
A4A2CR6	1901-1070	9	1	DIODE-PIN 110V	28480	
A4A2CR7	1901-1085	6	1	DIODE-SCHOTTKY SM SIG	28480	
A4A2CR8	1901-1085	6	1	DIODE-SCHOTTKY SM SIG	28480	
A4A2CR9	1901-1070	9	1	DIODE-PIN 110V	28480	
A4A2CR10	1901-1085	6	1	DIODE-SCHOTTKY SM SIG	28480	
A4A2CR11	1901-1085	6	1	DIODE-SCHOTTKY SM SIG	28480	
A4A2CR12	1901-1070	9	1	DIODE-PIN 110V	28480	
A4A2CR13	1901-1085	6	1	DIODE-SCHOTTKY SM SIG	28480	
A4A2CR14	1901-1085	6	1	DIODE-SCHOTTKY SM SIG	28480	
A4A2CR15	1901-1070	9	1	DIODE-PIN 110V	28480	
A4A2CR16	1901-0047	8	1	DIODE-SWITCHING 20V 75MA 10NS DO-35	71468	
A4A2CR17	1901-0047	8	1	DIODE-SWITCHING 20V 75MA 10NS DO-35	71468	
A4A2CR18	1901-0047	8	1	DIODE-SWITCHING 20V 75MA IONS DO-35	71468	
A4A2CR19	1901-0047	8	1	DIODE-SWITCHING 20V 75MA 10NS DO-35	71468	
A4A2CR20	1901-0047	8	1	DIODE-SWITCHING 20V 75MA 10NS DO-35	71468	
A4A2CR21	1901-0047	8	1	DIODE-SWITCHING 20V 75MA 10NS DO-35	71468	
A4A2CR26	1901-1070	3	1	DIODE-PIN 110V	28480	
A4A2CR27	1901-1070	3	1	DIODE-PIN 110V	28480	
A4A2CR28	1901-1070	3	1	DIODE-PIN 110V	28480	
A4A2CR29	1901-1070	3	1	DIODE-PIN 110V	28480	
A4A2CR30	1901-0047	3	1	DIODE-SWITCHING 20V 75MA 10NS DO-35	71468	
A4A2CR31	1910-0016	3	1	DIODE-GE 60V 60MA 1US DO-7		
A4A2CR32	1910-0016	3	1	DIODE-GE 60V 60MA 1US DO-7		
A4A2CR33	1910-0016	3	1	DIODE-GE 60V 60MA 1US DO-7		
A4A2CR35	1901-0047	3	1	DIODE-SWITCHING 20V 75MA 10NS DO-35	71468	
A4A2CR36	1901-0047	3	1	DIODE-SWITCHING 20V 75MA 10NS DO-35	71468	
A4A2CR37	85662-80026	*	1	DIODE-SWITCHING DTC SELECTED 1901-0050	28480	85662-80026
A4A2CR38	85662-80026	*	1	DIODE-SWITCHING OTC SELECTED 1901-0050	28480	85226-80026

Analyzer Repair Inc

*Indicates factory-selected value

HP Part Number 85662-60132
A4A2 Log Amplifier-Detector

Reference Designation	HP Part Number	CD	Qty	Description	Mfr Code	Mfr Part Number
A4A2E1	9170-0029		1	CORE-SHIELDING BEAD	0211	56-590-65A2/4A
A4A2E2	9170-0029		1	CORE-SHIELDING BEAD	0211	56-590-65A2/4A
A4A2E3	9170-0029		1	CORE-SHIELDING BEAD	0211	56-590-65A2/4A
A4A2E4	9170-0029		1	CORE-SHIELDING BEAD	0211	56-590-65A2/4A
A4A2E5	9170-0029		1	CORE-SHIELDING BEAD	0211	56-590-65A2/4A
A4A2E6	9170-0029		1	CORE-SHIELDING BEAD	0211	56-590-65A2/4A
A4A2E7	9170-0029		1	CORE-SHIELDING BEAD	02114	56-590-65A2/4A
A4A2E8	9170-0029		1	CORE-SHIELDING BEAD	0211	56-590-65A2/4A
A4A2J1	1250-0690		1	CONNECTOR-RF SMB M SGL-HOLE-FR SO-OHM	2848(	1250-0690
A4A2J2	1250-0690		1	CONNECTOR-RF SMB M SGL-HOLE-FR 50-OHM	2848(	1250-0690
A4A2L1	9100-1618		1	INDUCTOR RF-CH-MLD 5.6UH +-10% .166D-IN)	9980(	1537-30
A4A2L2	9140-0105		1	INDUCTOR RF-CH-MLD 8.2UH +-10% .166D-IN)	9980(	1537-34
A4A2L3	9140-0114		1	INDUCTOR RF-CH-MLD 10UH +-10% .166D-INX.	9980C	1537-36
A4A2L4	9140-0114		1	INDUCTOR RF-CH-MLD 10UH +-10% .166D-INX.	9980C	1537-36
A4A2L5	9100-1619		1	INDUCTOR RF-CH-MLD 6.8UH +-10% .166D-IN)	9980C	1537-32
A4A2L6	9100-1623		1	INDUCTOR RF-CH-MLD 27UH +-5% .166D-INX.3	9980C	1537-48
A4A2L7	9100-1623		1	INDUCTOR RF-CH-MLD 27UH +-5% .166D-INX.3	99800	1537-48
A4A2L8	9100-1618		1	INDUCTOR RF-CH-MLD 5.6UH +-10% .166D-INX	99800	1537-30
A4A2L9	9100-1618		1	INDUCTOR RF-CH-MLD 5.6UH +-10% .166D-INX	99800	1537-30
A4A2L10	9100-3553		1	INDUCTOR RF-CH-MLD 3.9UH +-5% .166D-INX.	24226	15M391J
A4A2L12	9140-0105		1	INDUCTOR RF-CH-MLD 8.2UH +-10% .166D-INX	99800	1537-34
A4A2L13	9140-0114		1	INDUCTOR RF-CH-MLD 10UH +-10% .166D-INX.	99800	1537-36
A4A2L14	9140-0178		1	INDUCTOR RF-CH-MLD 12UH +-10% .166D-INX.	99800	1537-38
A4A2MP1	1205-0011		1	HEAT SINK TO-S/TO-39-CS	98978	TXBF-032-0258
A4A2MP2	85662-20040		1	COVER, LOG AMP DETECTOR	28480	85662-20040
A4A2MP3	86701-40001		1	EXTRACTOR; PC	28480	86701-40001
A4A2Q1	1853-0075		1	TRANSISTOR-DUAL PNP PD=400MW	04713	
A4A2Q2	1854-0345		1	TRANSISTOR NPN 2N5179 SI TO-72 PD=200MW	04713	2N5179
A4A2Q3	1853-0015		1	TRANSISTOR PNP SI PD=200MW FT=500MHZ	04713	
A4A2Q4	1854-0345		1	TRANSISTOR NPN 2N5179 SI TO-72 PD=200MW	04713	2N5179
A4A2Q5	1853-0405		1	TRANSISTOR PNP SI PD=300MW FT=850MHZ	04713	2N4209
A4A2Q6	1854-0019		1	TRANSISTOR NPN SI TO-18 PD=360MW	04713	
A4A2Q7	1853-0281		1	TRANSISTOR PNP 2N2907A SI TO-18 PD=400MW	04713	2N2907A
A4A2Q8	1854-0404		1	TRANSISTOR NPN SI TO-18 PD=360MW	04713	
A4A2Q9	1854-0404		1	TRANSISTOR NPN SI TO-18 PD=360MW	04713	
A4A2Q10	1854-0404		1	TRANSISTOR NPN SI TO-18 PD=360MW	04713	
A4A2Q11	1854-0637		1	TRANSISTOR NPN 2N2219A SI TO-5 PD=800MW	04713	2N2219A
A4A2Q12	1854-0475		1	TRANSISTOR-DUAL NPN PD=750MW	28480	1854-0475
A4A2Q13	1854-0404		1	TRANSISTOR NPN SI TO-18 PD=360MW	04713	
A4A2Q14	1854-0019		1	TRANSISTOR NPN SI TO-18 PD=360MW	04713	
A4A2Q15	1854-0019		1	TRANSISTOR NPN SI TO-18 PD=360MW	04713	
A4A2Q16	1854-0019		1	TRANSISTOR NPN SI TO-18 PD=360MW	04713	
A4A2Q17	1854-0019		1	TRANSISTOR NPN SI TO-18 PD=360MW	04713	
A4A2Q18	1854-0019		1	TRANSISTOR NPN SI TO-18 PD=360MW	04713	
A4A2Q19	1854-0019		1	TRANSISTOR NPN SI TO-18 PD=360MW	04713	
A4A2Q20	1854-0019		1	TRANSISTOR NPN SI TO-18 PD=360MW	04713	
A4A2Q21	1854-0019		1	TRANSISTOR NPN SI TO-18 PD=360MW	04713	

**Indicates factory-selected value*

HP Part Number 85662-60132

A4A2 Log Amplifier-Detector

Reference Designatior	HP Part Number	C D	Qty	Description	Mfr Code	Mfr Part Number
A4A2Q22	1854-0019		1	TRANSISTOR NPN SI TO-18 PD=360MW	0471:	
A4A2R1	0757-0346		1	RESISTOR 10 +-1% .125W TF TC=0+-100	9163;	CMF-55-1. T-l
A4A2R2	0757-0346		1	RESISTOR 10 +-1% .125W TF TC=0+-100	9163;	CMF-55-1. T-l
A4A2R3	0757-0346		1	RESISTOR 10 +-1% .125W TF TC=0+-100	9163;	CMF-55-1. T-l
A4A2R4	0757-0346		1	RESISTOR 10 +-1% .125W TF TC=D+-100	91637	CMF-55-1, T-l
A4A2R5	0757-0439		1	RESISTOR 6.81K +-1% .125W TF TC=0+-100	19701	SFR25H
A4A2R6	0757-0279		1	RESISTOR 3.16K +-1% .125W TF TC=0+-100	19701	SFR25H
A4A2R7	0757-0402		1	RESISTOR 110 +-1% .125W TF TC=0+-100	19701	SFR25H
A4A2R8	0698-3136		1	RESISTOR 17.8K 1% .125W F TC=0+-100	24546	C4-1/8-TO-1782-F
A4A2R9	0698-3136		1	RESISTOR 17.8K 1% .125W F TC=0+-100	2454E	C4-1/8-TO-1782-F
A4A2R10	0698-3444		1	RESISTOR 316 1% .125W TF TC=0+-100	19701	SFR25H
A4A2R11	0757-0439		1	RESISTOR 6.81K +-1% .125W TF TC=0+-100	19701	SFR25H
A4A2R12	0757-0279	(	1	RESISTOR 3.16K +-1% .125W TF TC=0+-100	19701	SFR25H
A4A2R13	0757-0280		1	RESISTOR 1K +-1% .125W TF TC=0+-100	19701	SFR25H
A4A2R14	2100-3161	(	1	RESISTOR-TRMR 20K 10% TKF SIDE-ADJ 17-TF	73138	89PR20K
A4A2R15	0757-0439	4	1	RESISTOR 6.81K +-1% .125W TF TC=0+-100	19701	SFR25H
A4A2R16	0757-0279	(	1	RESISTOR 3.16K +-1% .125W TF TC=0+-100	19701	SFR25H
A4A2R17	3698-3444		1	RESISTOR 316 1% .125W TF TC=0+-100	19701	SFR25H
A4A2R18*	3757-0402	.	1	RESISTOR 110 1% .125W F TC=0+-100	24546	C4-1/8-TO-111-F
A4A2R19	3757-0279	(	1	RESISTOR 3.16K +-1% .125W TF TC=0+-100	19701	SFR25H
A4A2R20	3698-3136	8	1	RESISTOR 17.8K 1% .125W F TC=0+-100	24546	C4-1/8-TO-1782-F
A4A2R21	1698-3136	8	1	RESISTOR 17.8K 1% .125W F TC=0+-100	24546	C4-1/8-TO-1782-F
A4A2R22*	1698-3153	0	1	RESISTOR 3.831: 1% .125W TF TC=0+-100	19701	SFR25H
A4A2R23	0757-0279	(	1	RESISTOR 3.16K +-1% .125W TF TC=0+-100	19701	SFR25H
A4A2R24*	0757-0439	4	1	RESISTOR 6.81K +-1% .125W TF TC=0+-100	19701	SFR25H
A4A2R25	1757-0279	(	1	RESISTOR 3.16K +-1% .125W TF TC=0+-100	19701	SFR25H
A4A2R26	0698-3438	.	1	RESISTOR 147 1% .125W TF TC=0+-100	19701	SFR25H
A4A2R27	0698-3136	8	1	RESISTOR 17.8K 1% .125W F TC=0+-100	24546	C4-1/8-TO-1782-F
A4A2R28	0698-3136	8	1	RESISTOR 17.8K 1% .125W F TC=0+-100	24546	C4-1/8-TO-1782-F
A4A2R29	0698-3444	1	1	RESISTOR 316 1% .125W TF TC=0+-100	19701	SFR25H
A4A2R30	0757-0439	4	1	RESISTOR 6.81K +-1% .125W TF TC=0+-100	19701	SFR25H
A4A2R31	0757-0279	(	1	RESISTOR 3.16K +-1% .125W TF TC=0+-100	19701	SFR25H
A4A2R32	0757-0279	D	1	LESISTOR 3.16K 1% .125W F TC=0+-100	24546	C4-1/8-TO-3161-F
A4A2R34	0757-0439	4	1	RESISTOR 6.81K +-1% .125W TF TC=0+-100	19701	SFR25H
A4A2R35	1757-1094	3	1	RESISTOR 1.47K +-1% .125W TF TC=0+-100	19701	SFR25H
A4A2R36*	1698-3438	3	1	RESISTOR 147 1% .125W TF TC=0+-100	19701	SFR25H
A4A2R37	0757-0279	3	1	RESISTOR 3.16K 1% .125W F TC=0+-100	24546	C4-1/8-TO-3161-F
A4A2R38	1698-3136	3	1	RESISTOR 17.8K 1% .125W F TC=0+-100	24546	C4-1/8-TO-1782-F
A4A2R39	1698-3136	3	1	RESISTOR 17.8K 1% .125W F TC=0+-100	24546	C4-1/8-TO-1782-F
A4A2R40	0757-0439	4	1	RESISTOR 6.81K +-1% .125W TF TC=0+-100	19701	SFR25H
A4A2R41	1698-3444	L	1	RESISTOR 316 1% .125W TF TC=0+-100	19701	SFR25H
A4A2R42	1757-0279	I	1	RESISTOR 3.16K +-1% .125W TF TC=0+-100	19701	SFR25H
A4A2R43	1757-0439	I	1	RESISTOR 6.81K +-1% .125W TF TC=0+-100	19701	SFR25H
A4A2R44	1698-3444	L	1	RESISTOR 316 1% .125W TF TC=0+-100	19701	SFR25H
A4A2R45	0757-0280	3	1	RESISTOR 1K +-1% .125W TF TC=0+-100	19701	SFR25H
A4A2R46	0757-0439	I	1	RESISTOR 6.81K +-1% .125W TF TC=0+-100	19701	SFR25H
A4A2R47	0757-0346	'	1	RESISTOR 10 +-1% .125W TF TC=0+-100	91637	CMF-55-1. T-l
A4A2R48	0757-0346	'	1	RESISTOR 10 +-1% .125W TF TC=0+-100	91637	CMF-55-1, T-l

**Indicates factory-selected value*

HP Part Number 85662-60132

A4A2 Log Amplifier-Detector

Reference Designatior	HP Part Number	C D	Caly	Description	Mfr Code	Mfr Part Number
A4A2R49	0757-0346		1	RESISTOR 10 +-1% .125W TF TC=0+-100	9163	CMF-55-1, T-1
A4A2R50	0757-0442		1	RESISTOR 10K +-1% .125W TF TC=0+-100	1970	SFR25H
A4A2R56	0757-0438		1	RESISTOR 5.11K +-1% .125W TF TC=0+-100	1970	SFR25H
A4A2R57	0757-0458		1	RESISTOR 51.1K +-1% .125W TF TC=0+-100	1970	SFR25H
A4A2R58	0757-0442		1	RESISTOR 10K +-1% .125W TF TC=0+-100	1970	SFR25H
A4A2R59	0757-0279		1	RESISTOR 3.16K +-1% .125W TF TC=0+-100	1970	SFR25H
A4A2R60	0757-0442		1	RESISTOR 10K +-1% .125W TF TC=0+-100	1970	SFR25H
A4A2R61	2100-1972		1	RESISTOR-TRMR 20K 10% WW SIDE-ADJ 20-TRI	3299:	3005P-DM3-203
A4A2R62*	0757-0199		1	RESISTOR 21.5K +-1% .125W TF TC=0+-100	1970:	SFR25H
A4A2R63	0757-0442		1	RESISTOR 10K +-1% .125W TF TC=0+-100	1970:	SFR25H
A4A2R64	0757-0394		1	RESISTOR 51.1 +-1% .125W TF TC=0+-100	1970:	SFR25H
A4A2R65	0757-0280		1	RESISTOR 1K +-1% .125W TF TC=0+-100	1970:	SFR25H
A4A2R66	0757-0442		1	RESISTOR 10K +-1% .125W TF TC=0+-100	19701	SFR25H
A4A2R67	0757-0416		1	RESISTOR 511 +-1% .125W TF TC=0+-100	19701	SFR25H
A4A2R69	0698-3437		1	RESISTOR 133 1% .125W TF TC=0+-100	19701	SFR25H
A4A2R70	0757-0280		1	RESISTOR 1K +-1% .125W TF TC=0+-100	19701	SFR25H
A4A2R71	0698-3446		1	RESISTOR 383 1% .125W TF TC=0+-100	19701	SFR25H
A4A2R72	3757-0442		1	RESISTOR 10K +-1% .125W TF TC=0+-100	19701	SFR25H
A4A2R73	3757-0401		1	RESISTOR 100 +-1% .125W TF TC=0+-100	19701	SFR25H
A4A2R74	)757-0401		1	RESISTOR 100 +-1% .125W TF TC=0+-100	19701	SFR25H
A4A2R75	1757-0416		1	RESISTOR 511 +-1% .125W TF TC=0+-100	19701	SFR25H
A4A2R76	1757-0416		1	RESISTOR 511 +-1% .125W TF TC=0+-100	19701	SFR25H
A4A2R77	)757-0442		1	RESISTOR 10K +-1% .125W TF TC=0+-100	19701	SFR25H
A4A2R78	)757-0444		1	RESISTOR 12.1K +-1% .125W TF TC=0+-100	19701	SFR25H
A4A2R79	2100-3103		1	RESISTOR-TRMR 10K 10% TKF SIDE-ADJ 17-TR	73138	89PR10K
A4A2R80	)757-0440		1	RESISTOR 7.5K +-1% .125W TF TC=0+-100	19701	SFR25H
A4A2R81	)757-0279		1	RESISTOR 3.16K +-1% .125W TF TC=0+-100	19701	SFR25H
A4A2R82	)698-3442		1	RESISTOR 237 1% .125W TF TC=0+-100	19701	SFR25H
A4A2R83	)757-0401		1	RESISTOR 100 +-1% .125W TF TC=0+-100	19701	SFR25H
A4A2R84	)757-0439		1	RESISTOR 6.81K +-1% .125W TF TC=0+-100	19701	SFR25H
A4A2R85	)757-0346		1	RESISTOR 10 +-1% .125W TF TC=0+-100	91637	CMF-55-1. T-1
A4A2R86*	)698-3154		1	RESISTOR 4.221: 1% .125W F TC=0+-100	24546	C4-1/8-TO-4221-F
A4A2R87	1698-3152		1	RESISTOR 3.48K 1% .125W F TC=0+-100	24546	C4-1/8-TO-3481-F
A4A2R88*	1698-3158		1	RESISTOR 23.7K 1% .125W F TC=0+-100	24546	C4-1/8-TO-2372-F
A4A2R89*	)698-3457		1	RESISTOR 316K 1% .125W F TC=0+-100	28480	0698-3457
A4A2R90	)757-0458		1	RESISTOR 51.1K +-1% .125W TF TC=0+-100	19701	SFR25H
A4A2R91	'loo-2852		1	RESISTOR-TRMR 1K 10% WW SIDE-ADJ PO-TRN	32997	3005P-DM3-102
A4A2R92	1698-3154		1	RESISTOR 4.22K 1% .125W TF TC=0+-100	19701	SFR25H
A4A2R93	)757-0280		1	RESISTOR 1K +-1% .125W TF TC=0+-100	19701	SFR25H
A4A2R94	)683-0275		1	RESISTOR 2.7 5% .25W CF TC=0-400	2M627	R-25J
A4A2R95	1698-3153		1	RESISTOR 3.831: 1% .125W F TC=0+-100	24546	C4-1/8-TO-3831-F
A4A2R96*	1698-8807		1	RESISTOR 39K +-0.1% .125W TF TC=0+-25	19701	5033R
A4A2R97*	)698-3260		1	RESISTOR 464K 1% .125W TF TC=0+-100	19701	SFR25H
A4A2R98	)698-3153		1	RESISTOR 3.831: 1% .125W TF TC=0+-100	19701	SFR25H
A4A2R99*	)757-0461		1	RESISTOR 68.1K +-1% .125W TF TC=0+-100	19701	SFR25H
A4A2R100	)757-0442		1	RESISTOR 10K +-1% .125W TF TC=0+-100	19701	SFR25H
A4A2R101	1757-0280		1	RESISTOR 1K +-1% .125W TF TC=0+-100	19701	SFR25H

**Indicates factory-selected value*

HP Part Number 85662-60132

A4A2 Log Amplifier-Detector

Reference Designatio	HP Part Number	C D	Qty	Description	Mfr Code	Mfr Part Number
A4A2R102	3757-0442		1	RESISTOR 10K +-1% .125W TF TC=0+-100	1970	SFR25H
A4A2R103	0757-0465		1	RESISTOR 100K +-1% .125W TF TC=0+-100	1970	SFR25H
A4A2R104	0757-0442		1	RESISTOR 10K +-1% .125W TF TC=0+-100	1970	SFR25H
A4A2R105	1757-0279		1	RESISTOR 3.16K +-1% .125W TF TC=0+-100	1970	SFR25H
A4A2R106	1757-0394		1	RESISTOR 51.1 +-1% .125W TF TC=0+-100	1970	SFR25H
A4A2R107	0757-0442		1	RESISTOR 10K +-1% .125W TF TC=0+-100	1970	SFR25H
A4A2R108	0757-0442		1	RESISTOR 10K +-1% .125W TF TC=0+-100	1970.	SFR25H
A4A2R109	0757-0442		1	RESISTOR 10K +-1% .125W TF TC=0+-100	1970.	SFR25H
A4A2R110	0757-0442		1	RESISTOR 10K +-1% .125W TF TC=0+-100	1970:	SFR25H
A4A2R111	0757-0123		1	RESISTOR 34.81: +-1% .125W TF TC=0+-100	1970:	SFR25H
A4A2R112	0757-0395		1	RESISTOR 56.2 +-1% .125W TF TC=0+-100	1970:	SFR25H
A4A2R113	1757-0401		1	RESISTOR 100 +-1% .125W TF TC=0+-100	1970:	SFR25H
A4A2R114	0757-0346		1	RESISTOR 10 +-1% .125W TF TC=0+-100	9163;	CMF-55-1, T-1
A4A2R115	0757-0279		1	RESISTOR 3.16K +-1% .125W TF TC=0+-100	19701	SFR25H
A4A2TP1	251-0600		1	CONNECTOR-SGL CONT PIN 1.14-MM-BSC-SZ SQ	27264	16-06-0034
A4A2TP2	251-0600		1	CONNECTOR-SGL CONT PIN 1.14-MM-BSC-SZ SQ	27264	16-06-0034
A4A2TP3	251-0600		1	CONNECTOR-SGL CONT PIN 1.14-MM-BSC-SZ SQ	27264	16-06-0034
A4A2TP4	251-0600		1	CONNECTOR-SGL CONT PIN 1.14-MM-BSC-SZ SQ	27264	16-06-0034
A4A2TP5	251-0600		1	CONNECTOR-SGL CONT PIN 1.14-MM-BSC-SZ SQ	27264	16-06-0034
A4A2TP6	251-0600		1	CONNECTOR-SGL CONT PIN 1.14-MM-BSC-SZ SQ	27264	16-06-0034
A4A2TP7	251-0600		1	CONNECTOR-SGL CONT PIN 1.14-MM-BSC-SZ SQ	27264	16-06-0034
A4A2TP8	251-0600		1	CONNECTOR-SGL CONT PIN 1.14-MM-BSC-SZ SQ	27264	16-06-0034
A4A2U1	081-8117		1	OP AMP SCREENED 1826-0092	2848C	5081-8117
A4A2VR1	902-0126		1	DIODE-ZNR 2.61V 5% DO-7 PD=.4W TC=-.072%	04713	
A4A2VR2	902-0041		1	DIODE-ZNR 5.11V 5% DO-35 PD=.4W	04713	
A4A2VR3	902-0126		1	DIODE-ZNR 2.61V 5% DO-7 PD=.4W TC=-.072%	04713	

**Indicates factory-selected value*

HP Part Number 85662-60166

A4A2 Log Amplifier-Detector

Reference Designation	HP Part Number	CD	Qty	Description	Mfr Code	Mfr Part Number
A4A2	85662-60166	9	1	BOARD ASSEMBLY, LOG AMPLIFIER-DETECTOR (SERIAL PREFIX: 2534A)	28480	85662-60166
A4A2C3	0160-2055	9	1	CAPACITOR-FXD .01UF +80-20% 100VDC CER		805-504 Y5V 1032
A4A2C4	0160-2055	9	1	CAPACITOR-FXD .01UF +80-20% 100VDC CER		805-504 Y5V 1032
A4A2C5	0160-2055	9	1	CAPACITOR-FXD .01UF +80-20% 100VDC CER		805-504 Y5V 103Z
A4A2C6	0160-2055	9	1	CAPACITOR-FXD .01UF +80-20% 100VDC CER		805-504 Y5V 1032
A4A2C7	0160-2055	9	1	CAPACITOR-FXO .01UF +80-20% 100VDC CER		805-504 Y5V 1032
A4A2C8	0160-2055	9	1	CAPACITOR-FXD .01UF +80-20% 100VDC CER		805-504 Y5V 1032
A4A2C9	0160-2055	9	1	CAPACITOR-FXD .01UF +80-20% 100VDC CER		805-504 Y5V 1032
A4A2C10	0160-2055	9	1	CAPACITOR-FXD .01UF +80-20% 100VDC CER		805-504 Y5V 1032
A4A2C11	0160-2055	9	1	CAPACITOR-FXD .01UF +80-20% 100VDC CER		805-504 Y5V 1032
A4A2C12	0160-2055	9	1	CAPACITOR-FXD .01UF +80-20% 100VDC CER		805-504 Y5V 1032
A4A2C13	0160-2055	9	1	CAPACITOR-FXO .01UF +80-20% 100VDC CER		805-504 Y5V 1032
A4A2C14	0160-2055	9	1	CAPACITOR-FXD .01UF +80-20% 100VDC CER		805-504 Y5V 1032
A4A2C15	0160-2055	9	1	CAPACITOR-FXD .01UF +80-20% 100VDC CER		805-504 Y5V 1032
A4A2C16	0160-2055	9	1	CAPACITOR-FXD .01UF +80-20% 100VDC CER		805-504 Y5V 1032
A4A2C17	0160-2055	9	1	CAPACITOR-FXD .01UF +80-20% 100VDC CER		805-504 Y5V 1032
A4A2C18	0160-2055	9	1	CAPACITOR-FXD .01UF +80-20% 100VDC CER		805-504 Y5V 1032
A4A2C19	0160-2055	9	1	CAPACITOR-FXD .01UF +80-20% 100VDC CER		805-504 Y5V 1032
A4A2C20	0160-2055	9	1	CAPACITOR-FXD .01UF +80-20% 100VDC CER		805-504 Y5V 1032
A4A2C21	0160-2055	9	1	CAPACITOR-FXD .01UF +80-20% 100VDC CER		805-504 Y5V 103Z
A4A2C22	0160-2055	9	1	CAPACITOR-FXD .01UF +80-20% 100VDC CER		805-504 Y5V 1032
A4A2C23	0160-2055	9	1	CAPACITOR-FXD .01UF +80-20% 100VDC CER		805-504 Y5V 1032
A4A2C24	0160-2055	9	1	CAPACITOR-FXO .01UF +80-20% 100VDC CER		805-504 Y5V 1032
A4A2C25	0160-2055	9	1	CAPACITOR-FXD .01UF +80-20% 100VDC CER		805-504 Y5V 1032
A4A2C26	0160-2055	9	1	CAPACITOR-FXD .01UF +80-20% 100VDC CER		805-504 Y5V 1032
A4A2C27	0160-2055	9	1	CAPACITOR-FXD .01UF +80-20% 100VDC CER		805-504 Y5V 1032
A4A2C28	0160-2055	9	1	CAPACITOR-FXD .01UF +80-20% 100VDC CER		805-504 Y5V 1032
A4A2C29	0160-2055	9	1	CAPACITOR-FXD .01UF +80-20% 100VDC CER		805-504 Y5V 1032
A4A2C30	0160-2055	9	1	CAPACITOR-FXD .01UF +80-20% 100VDC CER		805-504 Y5V 1032
A4A2C32	0160-2055	9	1	CAPACITOR-FXD .01UF +80-20% 100VDC CER		805-504 Y5V 1032
A4A2C33	0160-2055	9	1	CAPACITOR-FXD .01UF +80-20% 100VDC CER		805-504 Y5V 1032
A4A2C34	0160-2055	9	1	CAPACITOR-FXD .01UF +80-20% 100VDC CER		805-504 Y5V 1032
A4A2C36	0160-2055	9	1	CAPACITOR-FXD .01UF +80-20% 100VDC CER		805-504 Y5V 1032
A4A2C37	0160-2055	9	1	CAPACITOR-FXD .01UF +80-20% 100VDC CER		805-504 Y5V 1032
A4A2C38	0160-2055	9	1	CAPACITOR-FXD .01UF +80-20% 100VDC CER		805-504 Y5V 1032
A4A2C39	0160-2055	9	1	CAPACITOR-FXD .01UF +80-20% 100VDC CER		805-504 Y5V 1032
A4A2C40	0160-2055	9	1	CAPACITOR-FXD .01UF +80-20% 100VDC CER		805-504 Y5V 1032
A4A2C41	0160-2055	9	1	CAPACITOR-FXD .01UF +80-20% 100VDC CER		805-504 Y5V 1032
A4A2C42	0160-2055	9	1	CAPACITOR-FXD .01UF +80-20% 100VDC CER		805-504 Y5V 1032
A4A2C43	0160-2055	9	1	CAPACITOR-FXD .01UF +80-20% 100VDC CER		805-504 Y5V 103Z
A4A2C44	0160-4084	8	1	CAPACITOR-FXD 0.1uF 50 V	56289	1C20X7R104M050B
A4A2C46	0160-2055	9	1	CAPACITOR-FXD .01UF +80-20% 100VDC CER		805-504 Y5V 1032
A4A2C48	0160-2055	9	1	CAPACITOR-FXD .01UF +80-20% 100VDC CER		805-504 Y5V 1032
A4A2C49	0160-2055	9	1	CAPACITOR-FXD .01UF +80-20% 100VDC CER		805-504 Y5V 1032
A4A2C50	0160-2055	9	1	CAPACITOR-FXO .01UF +80-20% 100VDC CER		805-504 Y5V 1032
A4A2C51	0160-2262	0	1	CAPACITOR-FXD 16pF 500 V	52763	

**Indicates factory-selected value*

HP Part Number 85662-60166

A4A2 Log Amplifier-Detector

Reference Designatior	HP Part Number	C D	Qty	Description	Mfr Code	Mfr Part Number
A4A2C52	0160-2200		1	CAPACITOR-FXD 43PF +-5% 30DVDC MICA -20,	09023	CD15ED430J03
A4A2C53	0160-2307		1	CAPACITOR-FXD 47PF +-5% 300VDC MICA -20,	09023	CD15ED470J03
A4A2C54	0160-2205		1	CAPACITOR-FXD 120PF +-5% 300VDC MICA 0+;	09023	CD15FD121J03
A4A2C55	0160-2055		1	CAPACITOR-FXD .01UF +80-20% 100VDC CER		805-504 Y5V 1032
A4A2C59	0160-2055		1	CAPACITOR-FXD .01UF +80-20% 100VDC CER	28480	0160-2055
A4A2C62	0160-2055		1	CAPACITOR-FXD .01UF +80-20% 100VDC CER		805-504 Y5V 1032
A4A2C63	0160-2055		1	CAPACITOR-FXD .01UF +80-20% 100VDC CER		805-504 Y5V 1032
A4A2C64	0160-2055		1	CAPACITOR-FXD .01UF +80-20% 100VDC CER		805-504 Y5V 1032
A4A2C65	0160-2055		1	CAPACITOR-FXD .01UF +80-20% 100VDC CER		805-504 Y5V 1032
A4A2C66	0180-0228		1	CAPACITOR-FXD 22UF+-10% 15VDC TA	56289	150D226X9015B2-DYS
A4A2C68	0160-4297		1	CAPACITOR-FXD .022UF +80-20% 100VDC CER		562CZC101AH223ZA23
A4A2C69	0160-4297		1	CAPACITOR-FXD .022UF +80-20% 100VDC CER		562CZC101AH223ZA23
A4A2C70	0160-4297		1	CAPACITOR-FXD .022UF +80-20% 100VDC CER		562CZC101AH223ZA23
A4A2C71	0160-4297		1	CAPACITOR-FXD .022UF +80-20% 100VDC CER		562CZC101AH223ZA23
A4A2C72	0160-4297		1	CAPACITOR-FXD .022UF +80-20% 100VDC CER		562CZC101AH223ZA23
A4A2C73	0160-4297		1	CAPACITOR-FXD .022UF +80-20% 100VDC CER		562CZC101AH223ZA23
A4A2C74	0160-2055		1	CAPACITOR-FXD .01UF +80-20% 100VDC CER		805-504 Y5V 1032
A4A2C75	0160-4297		1	CAPACITOR-FXD .022UF +80-20% 100VDC CER		562CZC101AH223ZA23
A4A2C76	0160-4805		1	CAPACITOR-FXD 47PF +-5% 100VDC CER 0+-30	04222	SA102A470JAAH
A4A2CR4	1901-1085		1	DIODE-SCHOTTKY SM SIG	28480	
A4A2CR5	1901-1085		1	DIODE-SCHOTTKY SM SIG	28480	
A4A2CR6	1901-1070		1	DIODE-PIN 110V	28480	
A4A2CR7	1901-1085		1	DIODE-SCHOTTKY SM SIG	28480	
A4A2CR8	1901-1085		1	DIODE-SCHOTTKY SM SIG	28480	
A4A2CR9	1901-1070		1	DIODE-PIN 110V	28480	
A4A2CR10	1901-1085		1	DIODE-SCHOTTKY SM SIG	28480	
A4A2CR11	1901-1085		1	DIODE-SCHOTTKY SM SIG	28480	
A4A2CR12	1901-1070		1	DIODE-PIN 110V	28480	
A4A2CR13	1901-1085		1	DIODE-SCHOTTKY SM SIG	28480	
A4A2CR14	1901-1085		1	DIODE-SCHOTTKY SM SIG	28480	
A4A2CR15	1901-1070		1	DIODE-PIN 110V	28480	
A4A2CR16	1901-0047		1	DIODE-SWITCHING 20V 75MA 10NS DO-35	71468	
A4A2CR17	1901-0047		1	DIODE-SWITCHING 20V 75MA 10NS DO-35	71468	
A4A2CR18	1901-0047		1	DIODE-SWITCHING 20V 75MA 10NS DO-35	71468	
A4A2CR19	1901-0047		1	DIODE-SWITCHING 20V 75MA 10NS DO-35	71468	
A4A2CR20	1901-0047		1	DIODE-SWITCHING 20V 75MA 10NS DO-35	71468	
A4A2CR21	1901-0047		1	DIODE-SWITCHING 20V 75MA 10NS DO-35	71468	
A4A2CR26	1901-1070		1	DIODE-PIN 110V	28480	
A4A2CR27	1901-1070		1	DIODE-PIN 110V	28480	
A4A2CR28	1901-1070		1	DIODE-PIN 110V	28480	
A4A2CR29	1901-1070		1	DIODE-PIN 110V	28480	
A4A2CR30	1901-0047		1	DIODE-SWITCHING 20V 75MA 10NS DO-35	71468	
A4A2CR31	1910-0016		1	DIODE-GE 60V 60MA 1US DO-7		
A4A2CR32	1910-0016		1	DIODE-GE 60V 60MA 1US DO-7		
A4A2CR33	1910-0016		1	DIODE-GE 60V 60MA 1US DO-7		
A4A2CR35	1901-0047		1	DIODE-SWITCHING 20V 75MA 10NS DO-35	71468	
A4A2CR36	1901-0047		1	DIODE-SWITCHING 20V 75MA 10NS DO-35	71468	
A4A2CR37	15662-80026		1	DIODE-SWITCHING DTC SELECTED 1901-0050	28480	85662-80026

**Indicates factory-selected value*

HP Part Number 85662-60166

A4A2 Log Amplifier-Detector

Reference Designation	HP Part Number	CD	Qty	Description	Mfr Code	Mfr Part Number
A4A2CR38	85662-80026	2	1	DIODE-SWITCHING DTC SELECTED 1901-0050	28480	85226-80026
A4A2E1	9170-0029	3	1	CORE-SHIELDING BEAD	02114	56-590-65A2/4A
A4A2E2	9170-0029	3	1	CORE-SHIELDING BEAD	02114	56-590-65A2/4A
A4A2E3	9170-0029	3	1	CORE-SHIELDING BEAD	02114	56-590-65A2/4A
A4A2E4	9170-0029	3	1	CORE-SHIELDING BEAD	02114	56-590-65A2/4A
A4A2E5	9170-0029	3	1	CORE-SHIELDING BEAD	02114	56-590-65A2/4A
A4A2E6	9170-0029	3	1	CORE-SHIELDING BEAD	02114	56-590-65A2/4A
A4A2E7	9170-0029	3	1	CORE-SHIELDING BEAD	02114	56-590-65A2/4A
A4A2E8	9170-0029	3	1	CORE-SHIELDING BEAD	02114	56-590-65A2/4A
A4A2J1	1250-2112	1	1	CONNECTOR-RF SMB M SGL-HOLE-FR 50-OHM	98291	051-047-0259-220
A4A2J2	1250-2112	1	1	CONNECTOR-RF SMB M SGL-HOLE-FR 50-OHM	98291	051-047-0259-220
A4A2L1	9100-1618	1	1	INDUCTOR RF-CH-MLD 5.6UH +-10% .166D-INX	99800	1537-30
A4A2L2	9140-0105	3	1	INDUCTOR RF-CH-MLD 8.2UH +-10% .166D-INX	99800	1537-34
A4A2L3	9140-0114	4	1	INDUCTOR RF-CH-MLD 10UH +-10% .166D-INX.	99800	1537-36
A4A2L4	9140-0114	4	1	INDUCTOR RF-CH-MLD 10UH +-10% .166D-INX.	99800	1537-36
A4A2L5	9100-1619	2	1	INDUCTOR RF-CH-MLD 6.8UH +-10% .166D-INX	99800	1537-32
A4A2L6	9100-1623	8	1	INDUCTOR RF-CH-MLD 27UH +-5% .166D-INX.3	99800	1537-48
A4A2L7	9100-1623	8	1	INDUCTOR RF-CH-MLD 27UH +-5% .166D-INX.3	99800	1537-48
A4A2L8	9100-1618	1	1	INDUCTOR RF-CH-MLD 5.6UH +-10% .166D-INX	99800	1537-30
A4A2L9	9100-1618	1	1	INDUCTOR RF-CH-MLD 5.6UH +-10% .166D-INX	99800	1537-30
A4A2L10	9100-3553	7	1	INDUCTOR RF-CH-MLD 3.9UH +-5% .166D-INX.	24226	15M391J
A4A2L12	9140-0105	3	1	INDUCTOR RF-CH-MLD 8.2UH +-10% .166D-INX	99800	1537-34
A4A2L13	9140-0114	4	1	INDUCTOR RF-CH-MLD 10UH +-10% .166D-INX.	99800	1537-36
A4A2L14	9140-0178	0	1	INDUCTOR RF-CH-MLD 12UH +-10% .166D-INX.	99800	1537-38
A4A2MP1	1205-0011	0	1	HEAT SINK TO-5/TO-39-CS	98978	TXBF-032-0258
A4A2MP2	85662-20040	4	1	COVER, LOG AMP DETECTOR	28480	85662-20040
A4A2MP3	86701-40001	9	1	EXTRACTOR; PC	28480	86701-40001
A4A2MP4	2950-0078	9	1	NUT-HEX-DBL-CHAM 10-32-THD .067-IN-THK	74163	500220
A4A2MP5	2200-0101	0	1	SCREW-MACH 4-40 .188-IN-LG PAN-HD-POZI	77250	
A4A2MP6	2190-0557	7	1	WASHER-LK INTL T NO. 10 .195-IN-ID	78189	1210-06-00-0551
A4A2MP7				NOT ASSIGNED		
A4A2MP8	1200-0173	5	1	INSULATOR-XSTR DAP-GL	07047	A-10001 DAP
A4A2Q1	1853-0075	9	1	TRANSISTOR-DUAL PNP PD=400MW	04713	
A4A2Q2	1854-0345	8	1	TRANSISTOR NPN 2N5179 SI TO-72 PD=200MW	04713	2N5179
A4A2Q3	1853-0015	7	1	TRANSISTOR PNP SI PD=200MW FT=500MHZ	04713	
A4A2Q4	1854-0345	8	1	TRANSISTOR NPN 2N5179 SI TO-72 PD=200MW	04713	2N5179
A4A2Q5	1853-0405	9	1	TRANSISTOR PNP SI PD=300MW FT=850MHZ	04713	2N4209
A4A2Q6	1854-0019	3	1	TRANSISTOR NPN SI TO-18 PD=360MW	04713	
A4A2Q7	1853-0281	9	1	TRANSISTOR PNP 2N2907A SI TO-18 PD=400MW	04713	2N2907A
A4A2Q8	1854-0404	0	1	TRANSISTOR NPN SI TO-18 PD=360MW	04713	
A4A2Q9	1854-0404	0	1	TRANSISTOR NPN SI TO-18 PD=360MW	04713	
A4A2Q10	1854-0404	0	1	TRANSISTOR NPN SI TO-18 PD=360MW	04713	
A4A2Q11	1854-0637	1	1	TRANSISTOR NPN 2N2219A SI TO-5 PD=800MW	04713	2N2219A
A4A2Q12	1854-1030	0	1	TRANSISTOR-DUAL NPN TO-78 PD=750MW	04713	
A4A2Q12	1854-0957	8	0	TRANSISTOR-DUAL NPN (ALTERNATE FOR 1854-1030)		
A4A2Q13	1854-0404	0	1	TRANSISTOR NPN SI TO-18 PD=360MW	04713	

**Indicates factory-selected value*

HP Part Number 85662-60166

A4A2 Log Amplifier-Detector

Reference Designatior	HP Part Number	C D	Qty	Description	Mfr Code	Mfr Part Number
A4A2Q14	1854-0019		1	TRANSISTOR NPN SI TO-18 PD=360MW	04713	
A4A2Q15	1854-0019		1	TRANSISTOR NPN SI TO-18 PD=360MW	04713	
A4A2Q16	1854-0019		1	TRANSISTOR NPN SI TO-18 PD=360MW	04713	
A4A2Q17	1854-0019		1	TRANSISTOR NPN SI TO-18 PD=360MW	04713	
A4A2Q18	1854-0019		1	TRANSISTOR NPN SI TO-18 PD=360MW	04713	
A4A2Q19	1854-0019		1	TRANSISTOR NPN SI TO-18 PD=360MW	04713	
A4A2Q20	1854-0019		1	TRANSISTOR NPN SI TO-18 PD=360MW	04713	
A4A2Q21	1854-0019		1	TRANSISTOR NPN SI TO-18 PD=360MW	04713	
A4A2Q22	1854-0019	3	1	TRANSISTOR NPN SI TO-18 PD=360MW	04713	
A4A2R1	0757-0346	2	1	RESISTOR 10 +-1% .125W TF TC=0+-100	91637	CMF-55-1. T-1
A4A2R2	0757-0346	2	1	RESISTOR 10 +-1% .125W TF TC=0+-100	91637	CMF-55-1. T-1
A4A2R3	0757-0346	2	1	RESISTOR 10 +-1% .125W TF TC=0+-100	91637	CMF-55-1, T-1
A4A2R4	0757-0346	2	1	RESISTOR 10 +-1% .125W TF TC=0+-100	91637	CMF-55-1, T-1
A4A2R5	0757-0439	4	1	RESISTOR 6.81K +-1% .125W TF TC=0+-100	19701	SFR25H
A4A2R6	0757-0279	0	1	RESISTOR 3.16K +-1% .125W TF TC=0+-100	19701	SFR25H
A4A2R7	0757-0402	1	1	RESISTOR 110 +-1% .125W TF TC=0+-100	19701	SFR25H
A4A2R8	0757-0447	4	1	RESISTOR 16.2K +-1% .125W TF TC=0+-100	19701	SFR25H
A4A2R9	0757-0447	4	1	RESISTOR 16.2K +-1% .125W TF TC=0+-100	19701	SFR25H
A4A2R10	0698-3444	1	1	RESISTOR 316 1% .125W TF TC=0+-100	19701	SFR25H
A4A2R11	0757-0439	4	1	RESISTOR 6.81K +-1% .125W TF TC=0+-100	19701	SFR25H
A4A2R12	0757-0279	0	1	RESISTOR 3.16K +-1% .125W TF TC=0+-100	19701	SFR25H
A4A2R13	0757-0280	3	1	RESISTOR 1K +-1% .125W TF TC=0+-100	19701	SFR25H
A4A2R14	2100-3161	6	1	RESISTOR-TRMR 20K 10% TKF SIDE-ADJ 17-TR	73138	89PR20K
A4A2R15	0757-0439	4	1	RESISTOR 6.81K +-1% .125W TF TC=0+-100	19701	SFR25H
A4A2R16	0757-0279	0	1	RESISTOR 3.16K +-1% .125W TF TC=0+-100	19701	SFR25H
A4A2R17	0698-3444	1	1	RESISTOR 316 1% .125W TF TC=0+-100	19701	SFR25H
A4A2R18*	0757-0402	1	1	RESISTOR 110 1% .125W F TC=0+-100	24546	C4-1/8-TO-111-F
A4A2R19	0757-0279	0	1	RESISTOR 3.16K +-1% .125W TF TC=0+-100	19701	SFR25H
A4A2R20	3757-0447	4	1	RESISTOR 16.2K +-1% .125W TF TC=0+-100	19701	SFR25H
A4A2R21	0757-0447	4	1	RESISTOR 16.2K +-1% .125W TF TC=0+-100	19701	SFR25H
A4A2R22*	3698-3153	9	1	RESISTOR 3.83K 1% .125W TF TC=0+-100	19701	SFR25H
A4A2R23	37574279	0	1	RESISTOR 3.16K +-1% .125W TF TC=0+-100	19701	SFR25H
A4A2R24*	0757-0439	4	1	RESISTOR 6.81K +-1% .125W TF TC=0+-100	19701	SFR25H
A4A2R25	3757-0279	0	1	RESISTOR 3.16K +-1% .125W TF TC=0+-100	19701	SFR25H
A4A2R26	3698-3438	3	1	RESISTOR 147 1% .125W TF TC=0+-100	19701	SFR25H
A4A2R27	1757-0447	4	1	RESISTOR 16.2K +-1% .125W TF TC=0+-100	19701	SFR25H
A4A2R28	0757-0447	4	1	RESISTOR 16.2K +-1% .125W TF TC=0+-100	19701	SFR25H
A4A2R29	1698-3444	1	1	RESISTOR 316 1% .125W TF TC=0+-100	19701	SFR25H
A4A2R30	0757-0439	4	1	RESISTOR 6.81K +-1% .125W TF TC=0+-100	19701	SFR25H
A4A2R31	1757-0279	0	1	RESISTOR 3.16K +-1% .125W TF TC=0+-100	19701	SFR25H
A4A2R32	1698-3151	7	1	RESISTOR 2.871: 1% .125W TF TC=0+-100	19701	SFR25H
A4A2R34	1757-0439	4	1	RESISTOR 6.81K +-1% .125W TF TC=0+-100	19701	SFR25H
A4A2R35	1757-1094	9	1	RESISTOR 1.47K +-1% .125W TF TC=0+-100	19701	SFR25H
A4A2R36*	0757-0405	4	1	RESISTOR 162 +-1% .125W TF TC=0+-100	19701	SFR25H
A4A2R37	1698-3151	7	1	RESISTOR 2.87K 1% .125W TF TC=0+-100	19701	SFR25H
A4A2R38	0757-0447	4	1	RESISTOR 16.2K +-1% .125W TF TC=0+-100	19701	SFR25H
A4A2R39	0757-0447	4	1	RESISTOR 16.2K +-1% .125W TF TC=0+-100	19701	SFR25H
A4A2R40	0757-0439	4	1	RESISTOR 6.81K +-1% .125W TF TC=0+-100	19701	SFR25H

**Indicates factory-selected value*

Reference Designation	HP Part Number	C D	Qty	Description	Mfr Code	Mfr Part Number
A4A2R41	0698-3444	1	1	RESISTOR 316 1% .125W TF TC=0+-100	19701	SFR25H
A4A2R42	0757-0279	0	1	RESISTOR 3.16K +-1% .125W TF TC=0+-100	19701	SFR25H
A4A2R43	0757-0439	4	1	RESISTOR 6.81K +-1% .125W TF TC=0+-100	19701	SFR25H
A4A2R44	0698-3444		1	RESISTOR 316 1% .125W TF TC=0+-100	19701	SFR25H
A4A2R45	0757-0280	3	1	RESISTOR 1K +-1% .125W TF TC=0+-100	19701	SFR25H
A4A2R46	0757-0439	4	1	RESISTOR 6.81K +-1% .125W TF TC=0+-100	19701	SFR25H
A4A2R47	0757-0346	2	1	RESISTOR 10 +-1% .125W TF TC=0+-100	91637	CMF-55-1. T-1
A4A2R48	0757-0346	2	1	RESISTOR 10 +-1% .125W TF TC=0+-100	91637	CMF-55-1. T-1
A4A2R49	0757-0346	2	1	RESISTOR 10 +-1% .125W TF TC=0+-100	91637	CMF-55-1. T-1
A4A2R50	0757-0442	9	1	RESISTOR 10K +-1% .125W TF TC=0+-100	19701	SFR25H
A4A2R56	0757-0438	3	1	RESISTOR 5.11K +-1% .125W TF TC=0+-100	19701	SFR25H
A4A2R57	0757-0458		1	RESISTOR 51.1K +-1% .125W TF TC=0+-100	19701	SFR25H
A4A2R58	0757-0442	9	1	RESISTOR 10K +-1% .125W TF TC=0+-100	19701	SFR25H
A4A2R59	0757-0279	0	1	RESISTOR 3.16K +-1% .125W TF TC=0+-100	19701	SFR25H
A4A2R60	0757-0442	9	1	RESISTOR 10K +-1% .125W TF TC=0+-100	19701	SFR25H
A4A2R61	2100-1972	3	1	RESISTOR-TRMR 20K 10% WW SIDE-ADJ 20-TRN	32997	3005P-DM3-203
A4A2R62*	0757-0199	3	1	RESISTOR 21.5K +-1% .125W TF TC=0+-100	19701	SFR25H
A4A2R63	0757-0442	9	1	RESISTOR 10K +-1% .125W TF TC=0+-100	19701	SFR25H
A4A2R64	0757-0394	0	1	RESISTOR 51.1 +-1% .125W TF TC=0+-100	19701	SFR25H
A4A2R65	0757-0280	3	1	RESISTOR 1K +-1% .125W TF TC=0+-100	19701	SFR25H
A4A2R66	0757-0442	9	1	RESISTOR 10K +-1% .125W TF TC=0+-100	19701	SFR25H
A4A2R67	0757-0416	7		RESISTOR 511 +-1% .125W TF TC=0+-100	19701	SFR25H
A4A2R69	0698-3437	2		RESISTOR 133 1% .125W TF TC=0+-100	19701	SFR25H
A4A2R70	0757-0280	3		RESISTOR 1K +-1% .125W TF TC=0+-100	19701	SFR25H
A4A2R71	0698-3446	3	1	RESISTOR 383 1% .125W TF TC=0+-100	19701	SFR25H
A4A2R72	0757-0442	9	1	RESISTOR 10K +-1% .125W TF TC=0+-100	19701	SFR25H
A4A2R73	0757-0401	0	1	RESISTOR 100 +-1% .125W TF TC=0+-100	19701	SFR25H
A4A2R74	0757-0401	0	1	RESISTOR 100 +-1% .125W TF TC=0+-100	19701	SFR25H
A4A2R75	0757-0416	7	1	RESISTOR 511 +-1% .125W TF TC=0+-100	19701	SFR25H
A4A2R76	0757-0416	7	1	RESISTOR 511 +-1% .125W TF TC=0+-100	19701	SFR25H
A4A2R77	0757-0442	9	1	RESISTOR 10K +-1% .125W TF TC=0+-100	19701	SFR25H
A4A2R78	0757-0444		1	RESISTOR 12.1K +-1% .125W TF TC=0+-100	19701	SFR25H
A4A2R79	2100-3103	6	1	RESISTOR-TRMR 10K 10% TKF SIDE-ADJ 17-TR	73138	89PR10K
A4A2R80	0757-0440	7	1	RESISTOR 7.5K +-1% .125W TF TC=0+-100	19701	SFR25H
A4A2R81	0757-0279	0	1	RESISTOR 3.16K +-1% .125W TF TC=0+-100	19701	SFR25H
A4A2R82	0698-3442	9	1	RESISTOR 237 1% .125W TF TC=0+-100	19701	SFR25H
A4A2R83	0757-0401	0	1	RESISTOR 100 +-1% .125W TF TC=0+-100	19701	SFR25H
A4A2R84	0757-0439	4	1	RESISTOR 6.81K +-1% .125W TF TC=0+-100	19701	SFR25H
A4A2R85	0757-0346	2	1	RESISTOR 10 +-1% .125W TF TC=0+-100	91637	CMF-55-1. T-1
A4A2R86*	0757-0434	9	1	RESISTOR 3.651: +-1% .125W TF TC=0+-100	19701	SFR25H
A4A2R87	0698-6271	8		RESISTOR 3K +-0.1% .125W TF TC=0+-50	91637	CMF-55-1. T-2
A4A2R88*	0698-8853	6		RESISTOR 21.98K +-0.1% .125W TF TC=0+-25	19701	5033R
A4A2R89*	0698-3460			RESISTOR 422K 1% .125W TF TC=0+-100	19701	SFR25H
A4A2R90	0757-0458	7	1	RESISTOR 51.1K +-1% .125W TF TC=0+-100	19701	SFR25H
A4A2R91	2100-2852	0	1	RESISTOR-TRMR 1K 10% WW SIDE-ADJ LO-TRN	32997	3005P-DM3-102
A4A2R92	0698-3154	0	1	RESISTOR 4.22K 1% .125W TF TC=0+-100	19701	SFR25H
A4A2R93	0757-0280	3	1	RESISTOR 1K +-1% .125W TF TC=0+-100	19701	SFR25H

**Indicates factory-selected value*

HP Part Number 85662-60166

A4A2 Log Amplifier-Detector

Reference Designation	HP Part Number	CD	Qty	Description	Mfr Code	Mfr Part Number
A4A2R94	0683-0275		1	RESISTOR 2.7 5% .25W CF TC=0-400	2M627	R-25J
A4A2R95	0698-3989		1	RESISTOR 3.84K .1% .125W TF TC=0+-25	91637	CMF-55-1
A4A2R96*	0698-8807		1	RESISTOR 39K +-0.1% .125W TF TC=0+-25	19701	5033R
A4A2R97*	0698-3260		1	RESISTOR 464K 1% .125W TF TC=0+-100	19701	SFR25H
A4A2R98	0698-3153		1	RESISTOR 3.831: 1% .125W TF TC=0+-100	19701	SFR25H
A4A2R99*	0757-0461		1	RESISTOR 68.1K +-1% .125W TF TC=0+-100	19701	SFR25H
A4A2R100	0757-0442		1	RESISTOR 10K +-1% .125W TF TC=0+-100	19701	SFR25H
A4A2R101	0757-0280		1	RESISTOR 1K +-1% .125W TF TC=0+-100	19701	SFR25H
A4A2R102	0757-0442		1	RESISTOR 10K +-1% .125W TF TC=0+-100	19701	SFR25H
A4A2R103	0757-0465		1	RESISTOR 100K +-1% .125W TF TC=0+-100	19701	SFR25H
A4A2R104	0757-0442		1	RESISTOR 10K +-1% .125W TF TC=0+-100	19701	SFR25H
A4A2R105	0757-0279		1	RESISTOR 3.16K +-1% .125W TF TC=0+-100	19701	SFR25H
A4A2R106	0757-0394		1	RESISTOR 51.1 +-1% .125W TF TC=0+-100	19701	SFR25H
A4A2R107	0757-0442		1	RESISTOR 10K +-1% .125W TF TC=0+-100	19701	SFR25H
A4A2R108	0757-0442		1	RESISTOR 10K +-1% .125W TF TC=0+-100	19701	SFR25H
A4A2R109	0757-0442		1	RESISTOR 10K +-1% .125W TF TC=0+-100	19701	SFR25H
A4A2R110	0757-0442		1	RESISTOR 10K +-1% .125W TF TC=0+-100	19701	SFR25H
A4A2R111	0757-0123		1	RESISTOR 34.8K +-1% .125W TF TC=0+-100	19701	SFR25H
A4A2R112	0757-0395		1	RESISTOR 56.2 +-1% .125W TF TC=0+-100	19701	SFR25H
A4A2R113	0757-0401		1	RESISTOR 100 +-1% .125W TF TC=0+-100	19701	SFR25H
A4A2R114	0757-0346		1	RESISTOR 10 +-1% .125W TF TC=0+-100	91637	CMF-55-1, T-1
A4A2R115	0757-0279		1	RESISTOR 3.16K +-1% .125W TF TC=0+-100	19701	SFR25H
A4A2TP1	1251-0600		1	CONNECTOR-SGL CONT PIN 1.14-MM-BSC-SZ SQ	27264	16-06-0034
A4A2TP2	1251-0600		1	CONNECTOR-SGL CONT PIN 1.14-MM-BSC-SZ SQ	27264	16-06-0034
A4A2TP3	1251-0600		1	CONNECTOR-SGL CONT PIN 1.14-MM-BSC-SZ SQ	27264	16-06-0034
A4A2TP4	1251-0600		1	CONNECTOR-SGL CONT PIN 1.14-MM-BSC-SZ SQ	27264	16-06-0034
A4A2TP5	1251-0600		1	CONNECTOR-SGL CONT PIN 1.14-MM-BSC-SZ SC	27264	16-06-0034
A4A2TP6	1251-0600		1	CONNECTOR-SGL CONT PIN 1.14-MM-BSC-SZ SQ	27264	16-06-0034
A4A2TP7	1251-0600		1	CONNECTOR-SGL CONT PIN 1.14-MM-BSC-SZ SQ	27264	16-06-0034
A4A2TP8	1251-0600		1	CONNECTOR-SGL CONT PIN 1.14-MM-BSC-SZ SQ	27264	16-06-0034
A4A2TP9	0360-0124		1	CONNECTOR-SGL CONT PIN .04-IN-BSC-SZ RND	97300	
A4A2TP10	0360-0124		1	CONNECTOR-SGL CONT PIN .04-IN-BSC-SZ-RND	97300	
A4A2U1	5081-8117		1	OP AMP SCREENED 1826-0092	28480	5081-8117
A4A2VR1	1902-0126		1	DIODE-ZNR 2.61V 5% DO-7 PD=.4W TC=-.072%	04713	
A4A2VR2	1902-0041		1	DIODE-ZNR 5.11V 5% DO-35 PD=.4W	04713	
A4A2VR3	1902-0126		1	DIODE-ZNR 2.61V 5% DO-7 PD=.4W TC=-.072%	04713	

**Indicates factory-selected value*

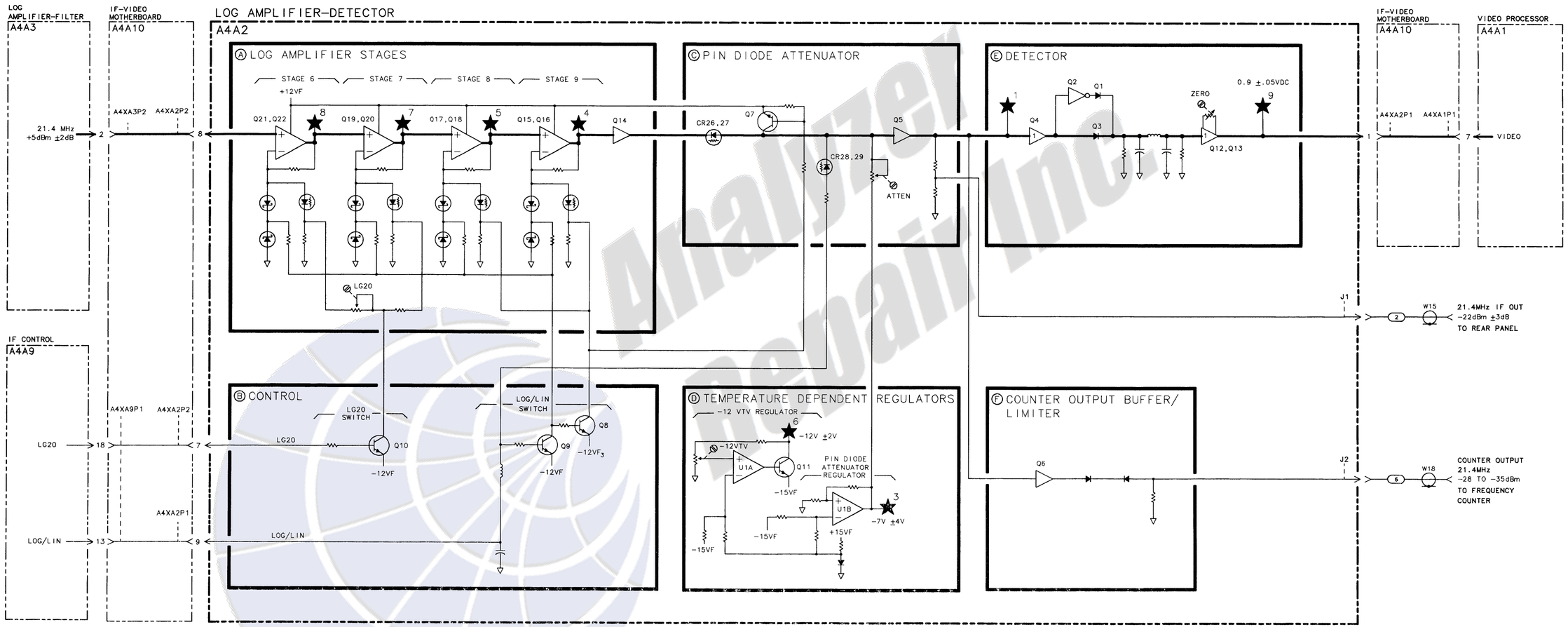

A4A2 LOG AMPLIFIER-DETECTOR, BLOCK DIAGRAM

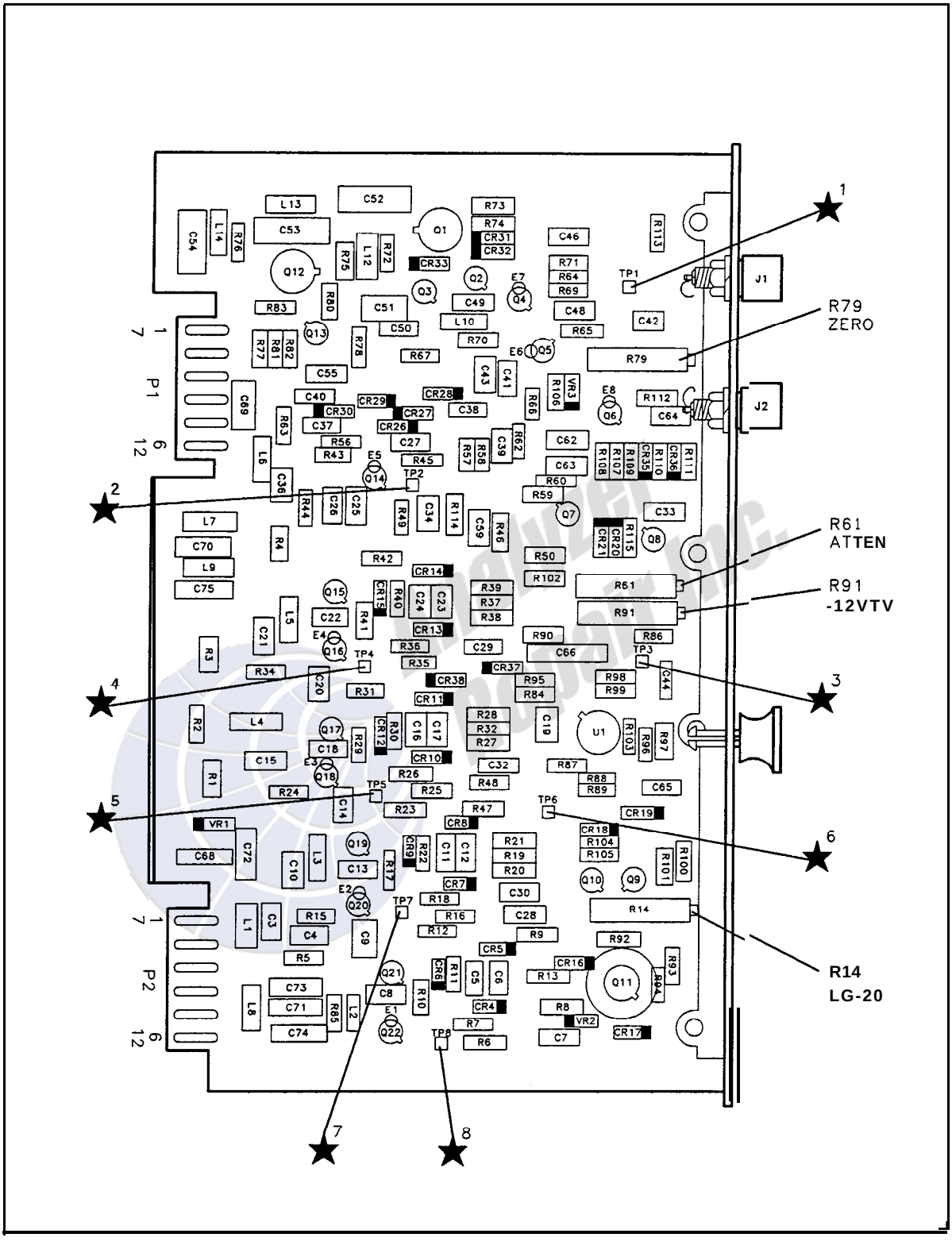

A4A2 Log Amplifier-Detector Component Locations, 85662-60132

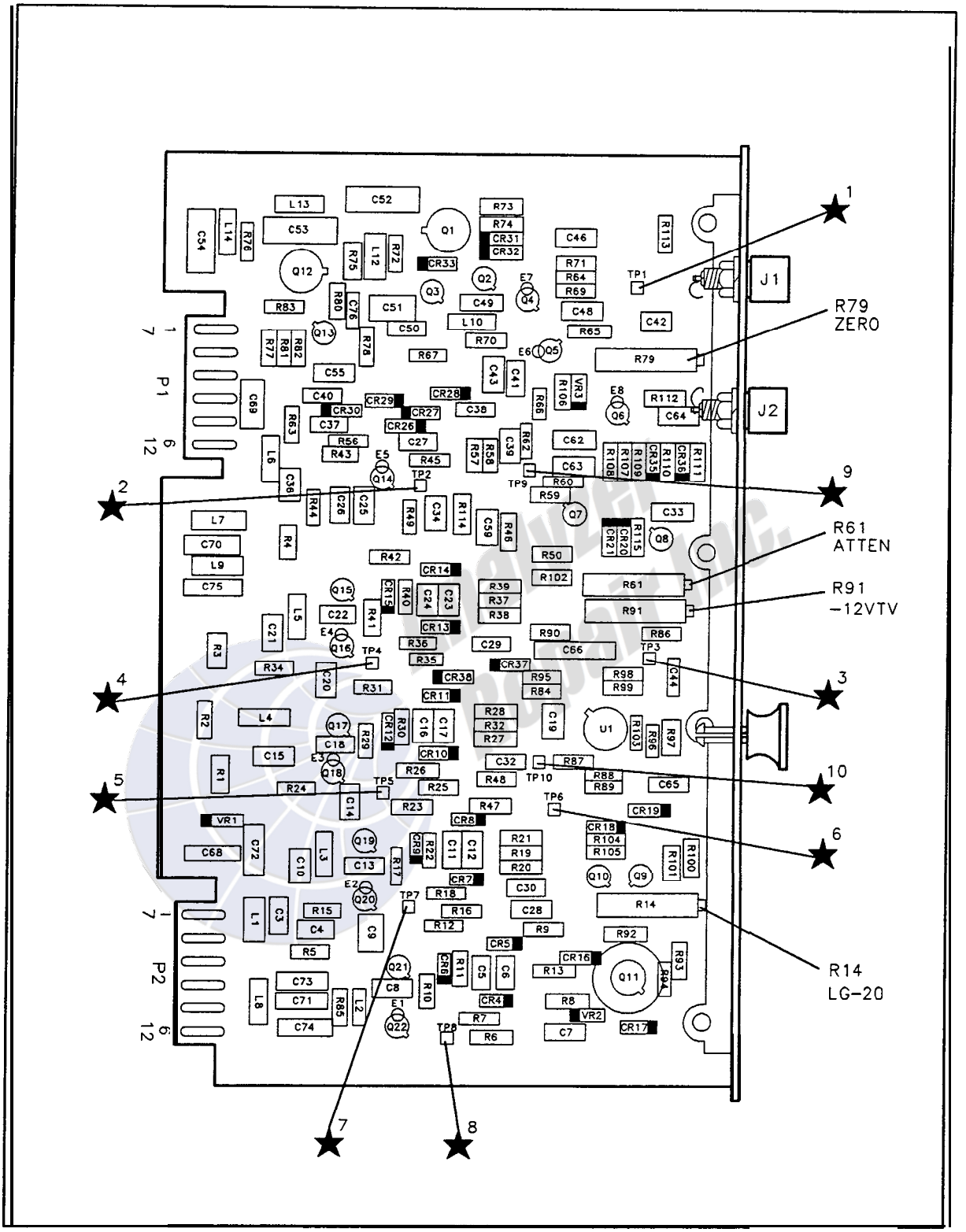

A4A2 Log Amplifier-Detector Component Locations, 85662-60166

A4A2 LOG AMPLIFIER – DETECTOR
85662-60132 (SERIAL PREFIXES: 2403A – 2517A)

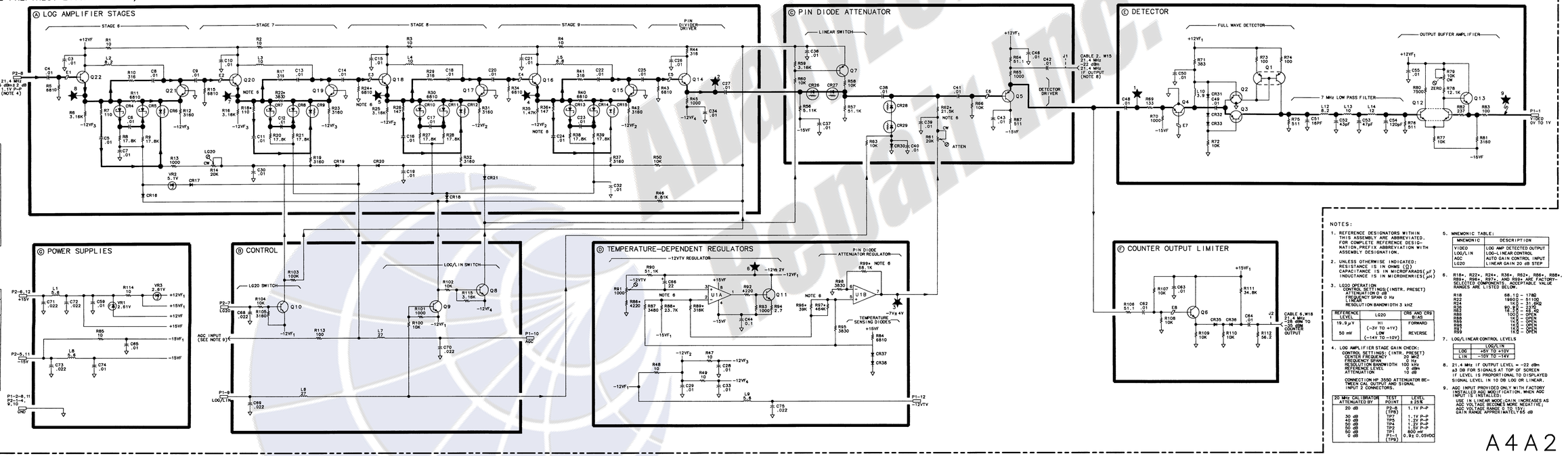

P1

PIN	SIGNAL	TO/FROM	FUNCTION BLOCK
1	VIDEO	A4A1 P1-7	E
7	GND		G
2	GND		G
8	GND		G
3	GND		G
9	LOG/LIN	A4A9 P1-13	B
4	GND		G
10	ADC	A4A3 P1-11	B
5	GND		G
11	GND		G
6	GND		G
12	-12VTV	A4A3 P1-12	D

P2

PIN	SIGNAL	TO/FROM	FUNCTION BLOCK
1	GND		G
7	LG20	A4A9 P1-18	B
2	GND		G
8	21.4 MHz	A4A3 P2-2	A
3	GND		G
9	GND		G
4	GND		G
10	GND		G
5	-15V		G
11	-15V		G
6	+15V		G
12	+15V		G

NOTES:

1. REFERENCE DESIGNATORS WITHIN THIS ASSEMBLY ARE ABBREVIATED. FOR COMPLETE REFERENCE DESIGNATION, PREFIX ABBREVIATION WITH ASSEMBLY DESIGNATION.
2. UNLESS OTHERWISE INDICATED: RESISTANCE IS IN OHMS (Ω) CAPACITANCE IS IN MICROFARADS(μF) INDUCTANCE IS IN MICROHENRIES(μH)
3. LG20 OPERATION
   CONTROL SETTINGS:(INSTR. PRESET)
   ATTENUATION 0 dB
   CENTER FREQUENCY SPAN 0 Hz
   LG20
   RESOLUTION BANDWIDTH 3 kHz

REFERENCE LEVEL	LG20	CRS AND CRS BIAS
19.9 μV	HI (-3V TO +1V)	FORWARD
50 mV	LOW (-14V TO -10V)	REVERSE

4. LOG AMPLIFIER STAGE GAIN CHECK:
   CONTROL SETTINGS: (INTR. PRESET)
   CENTER FREQUENCY 20 MHz
   FREQUENCY SPAN 0 Hz
   RESOLUTION BANDWIDTH 100 kHz
   REFERENCE LEVEL 0 dBm
   ATTENUATION 10 dB
   CONNECTION HP 3350 ATTENUATOR BETWEEN CAL OUTPUT AND SIGNAL INPUT 2 CONNECTORS.

20 MHz CALIBRATOR ATTENUATED BY	TEST POINT	LEVEL ± 2%
20 dB	P2-8 (TP9)	1.1V P-P
30 dB	TP4	1.1V P-P
40 dB	TP3	1.1V P-P
50 dB	TP2	1.1V P-P
50 dB	TP1	900 mV
0 dB	P1-1 (TP5)	0.9± 0.05VDC

5. MNEMONIC TABLE:

MNEMONIC	DESCRIPTION
VIDEO	LOG AMP DETECTED OUTPUT
LOG/LIN	LOG-LINEAR CONTROL
AGC	AUTO GAIN CONTROL INPUT
LG20	LINEAR GAIN 20 dB STEP

6. R18-, R22-, R24-, R36-, R62-, R86-, R88-, R89-, R92-, AND R93- ARE FACTORY-SELECTED. NOMINAL ACCEPTABLE VALUE RANGES ARE LISTED BELOW:

R18	68.1Ω – 178Ω
R22	196Ω – 511Ω
R24	90.9Ω – 237Ω
R36	8.25Ω – 22.6Ω
R62	100Ω – OPEN
R86	100Ω – OPEN
R88	100Ω – OPEN
R89	100Ω – OPEN
R92	1KΩ – OPEN
R93	1KΩ – OPEN

7. LOG/LINEAR CONTROL LEVELS

	LOG/LIN
LOG	+5V TO +10V
LIN	-10V TO -14V

8. 21.4 MHz IF OUTPUT LEVEL = -22 dBm ±3 DB FOR SIGNALS AT TOP OF SCREEN IF LEVEL IS PROPORTIONAL TO DISPLAYED SIGNAL LEVEL IN 10 DB LOG OR LINEAR.
9. AGC INPUT PROVIDED ONLY WITH FACTORY INSTALLED AGC MODIFICATION. WHEN AGC INPUT IS INSTALLED:
   USE IN LINEAR MODE:GAIN INCREASES AS AGC VOLTAGE BECOME'S MORE NEGATIVE; AGC VOLTAGE RANGE 0 TO 13V; GAIN RANGE APPROXIMATELY 65 dB

A4A2

A4A2 LOG AMPLIFIER-DETECTOR, SCHEMATIC DIAGRAM

A4A2 LOG AMPLIFIER – DETECTOR
85662-60166
(SERIAL PREFIX: 2534A)

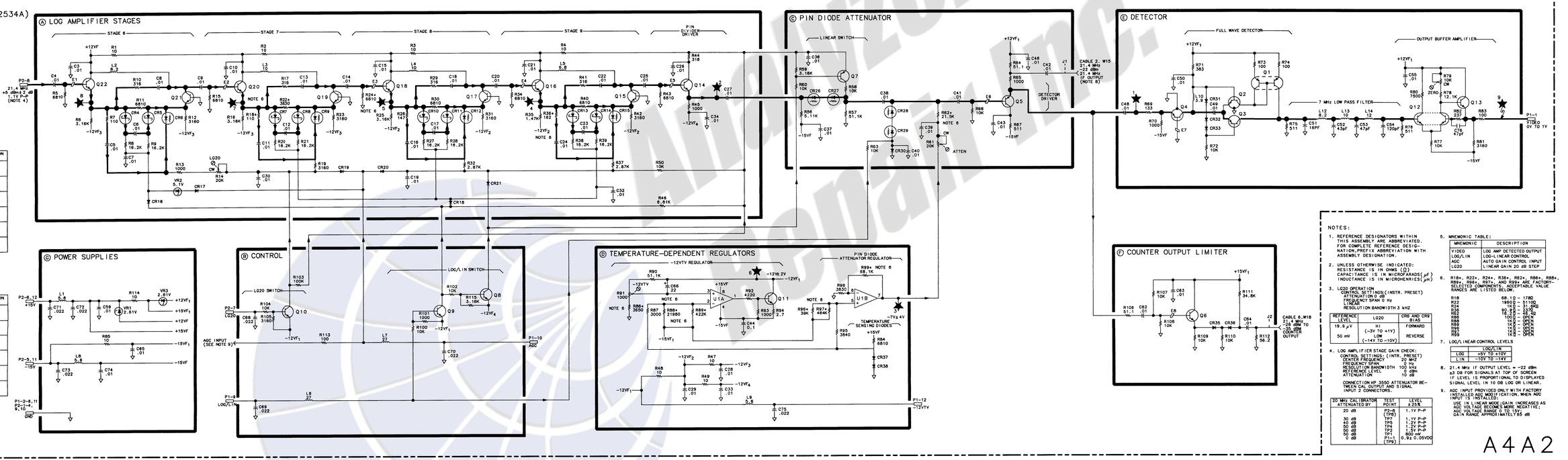

P1

PIN	SIGNAL	TO/FROM	FUNCTION BLOCK
1	VIDEO	A4A1 P1-7	E
7	GND		C
2	GND		G
8	GND		G
3	GND		G
9	LOG/LIN	A4A9 P1-13	B
4	GND		C
10	AGC	A4A3 P1-11	B
5	GND		G
11	GND		G
6	GND		C
12	−12VTV	A4A3 P1-12	D

P2

PIN	SIGNAL	TO/FROM	FUNCTION BLOCK
1	GND		G
7	LG20	A4A9 P1-18	B
2	GND		G
8	21.4 MHz	A4A3 P2-2	A
3	GND		G
9	GND		G
4	GND		G
10	GND		G
5	−15V		G
11	−15V		G
6	+15V		G
12	+15V		G

NOTES:

1. REFERENCE DESIGNATORS WITHIN THIS ASSEMBLY ARE ABBREVIATED. FOR COMPLETE REFERENCE DESIGNATION, PREFIX ABBREVIATION WITH ASSEMBLY DESIGNATION.
2. UNLESS OTHERWISE INDICATED: RESISTANCE IS IN OHMS (Ω) CAPACITANCE IS IN MICROFARADS (μF) INDUCTANCE IS IN MICROHENRIES (μH)
3. LG20 OPERATION CONTROL SETTINGS (INSTR. PRESET) ATTENUATOR 0 dB FREQUENCY SPAN 0 Hz TIME/DIV RESOLUTION BANDWIDTH 3 kHz

REFERENCE LEVEL	LG20	CR8 AND CR9 BIAS
19.9 μV	HI (−3V TO +1V)	FORWARD
50 mV	LOW (−14V TO −10V)	REVERSE

4. LOG AMPLIFIER STAGE GAIN CHECK: CONTROL SETTINGS: (INSTR. PRESET) FREQUENCY SPAN: 20 MHZ RESOLUTION BANDWIDTH 100 kHz REFERENCE LEVEL 0 dBm ATTENUATION 10 dB

   CONNECTION HP 3550 ATTENUATOR BETWEEN CAL OUTPUT AND SIGNAL INPUT 2 CONNECTORS.

20 MHz CALIBRATOR ATTENUATED BY	TEST POINT	LEVEL ±.25%
20 dB	P2-8 (TP8)	1.1V P-P
30 dB	TP7	1.1V P-P
40 dB	TP3	1.2V P-P
50 dB	TP4	1.2V P-P
60 dB	TP2	1.2V P-P
0 dB	TP5	800mV
	P1-1 (TP6)	0.92 0.05VDC

5. MNEMONIC TABLE:

MNEMONIC	DESCRIPTION
VIDEO	LOG AMP DETECTED OUTPUT
LOG/LIN	LOG-LINEAR CONTROL
AGC	AUTO GAIN CONTROL INPUT
LG20	LINEAR GAIN 20 dB STEP

6. R18*, R22*, R24*, R36*, R82*, R86*, R88*, R89*, R96*, R97*, AND R99* ARE FACTORY-SELECTED COMPONENTS. ACCEPTABLE VALUE RANGES ARE LISTED BELOW.

R18	68.1Ω – 178Ω
R22	196Ω – 511Ω
R24	196Ω – 511Ω
R36	90.9Ω – 237Ω
R82	18.2K – 47.5K
R86	18K – OPEN
R88	1K – OPEN
R89	1K – OPEN
R96	1K – OPEN
R97	1K – OPEN
R99	1K – OPEN

7. LOG/LINEAR CONTROL LEVELS

LOG/LIN	
LOG	+5V TO +10V
LIN	−10V TO −14V

8. 21.4 MHz IF OUTPUT LEVEL = −22 dBm ±3 DB FOR SIGNALS AT TOP OF SCREEN IF LEVEL IS PROPORTIONAL TO DISPLAYED SIGNAL LEVEL IN 10 DB LOG OR LINEAR.
9. ADC INPUT PROVIDED ONLY WITH FACTORY INSTALLED ADC MODIFICATION. WHEN ADC INPUT IS INSTALLED:

   USE IN LINEAR MODE (GAIN INCREASES AS ADC VOLTAGE BECOMES MORE NEGATIVE; ADC VOLTAGE RANGE 0 TO −10V). GAIN RANGE APPROXIMATELY 55 dB

A4A2

A4A2 LOG AMPLIFIER–DETECTOR, SCHEMATIC DIAGRAM

A4A3

A4A3 Log Amplifier-Filter, Circuit Description

A4A3 Log Amplifier-Filter, with A4A2 Log Amplifier-Detector, provides the ability to display signals in either a linear or log mode. In log mode the calibrated display range is 90 dB. A4A3 contains the first five of nine log stages, and A4A2 contains the last four. A4A3 also contains circuitry for using one of the log stages as a switchable 10 dB gain step. This is used only in linear mode.

After being processed by the first five log amplifier stages, the 21.4 MHz IF signal is applied to the log amplifier filter, the bandwidth of which is either narrow (approximately 1 MHz) or wide (>20 MHz). The filter is in narrow mode for resolution bandwidths of ≤30 kHz to reduce noise generated in the log amplifier stages.

Control lines from A4A9 IF Control drive circuits of A4A3 which control the log amplifier filter, log/linear switching, and 10 dB linear gain step.

Log Amplifier Stages Ⓐ

In LOG mode, the five log amplifier stages in A4A3 and the four log amplifier stages in A4A2 limit their gain in sequence with increasing signal level to provide 90 dB of log display range. In LINEAR mode, signal-level-dependent components are switched out of the signal path, and a linear display is provided.

LOG Mode

A simplified schematic of a log amplifier stage is shown in Figure 1. In LOG mode, the LOG/LIN control line is high (about +7 V), Q16 is on, forward biasing log diodes CR25, CR26, and all other log diodes in this assembly. CR25 and CR26 are Schottky diodes with a forward bias voltage of approximately +0.4 V. Q11 is an emitter follower used as a voltage source which drives Q12 through the resistance of CR25 and CR26. Q12 forms a common-base amplifier tuned to approximately 21.4 MHz. The gain of the amplifier is set by the ratio of R48 to the total resistance R_T between the emitters of Q11 and Q12 (primarily the resistance of CR25 and CR26). The formula for computing gain is:

$$G = 1 + \frac{316}{R_T}$$

R_T is at a minimum (approximately 150 Ω) for small signals. The small-signal gain of the stage (about 10 dB) is set by the dc bias current through the log diodes. As the signal level at the Q11 emitter increases, signal current cancels bias current in the log diodes, increasing R_T. The gain of the stage for large signals is reduced to nearly unity (0 dB) because R_T becomes very large. Signal current flow through R49 keeps the stage gain slightly above unity to compensate for the input loading of the following stage.

Analyzer Repair Inc.

Bias Supplies

The -12 VTV is supplied to A4A3 from A4A2. This voltage determines log diode bias current and becomes more negative as temperature increases to compensate for the increased resistance of the log diodes. The same supply is used to compensate the log diodes of the four log stages in A4A2.

LINEAR Mode

In LINEAR Mode (See Figure 1) log diodes CR15 and CR16 are zero biased, and the limiting action is removed from the stage. R_T is large, and stage gain is nearly unity. Signal flow is through emitter follower Q11 and R48 to Q13.

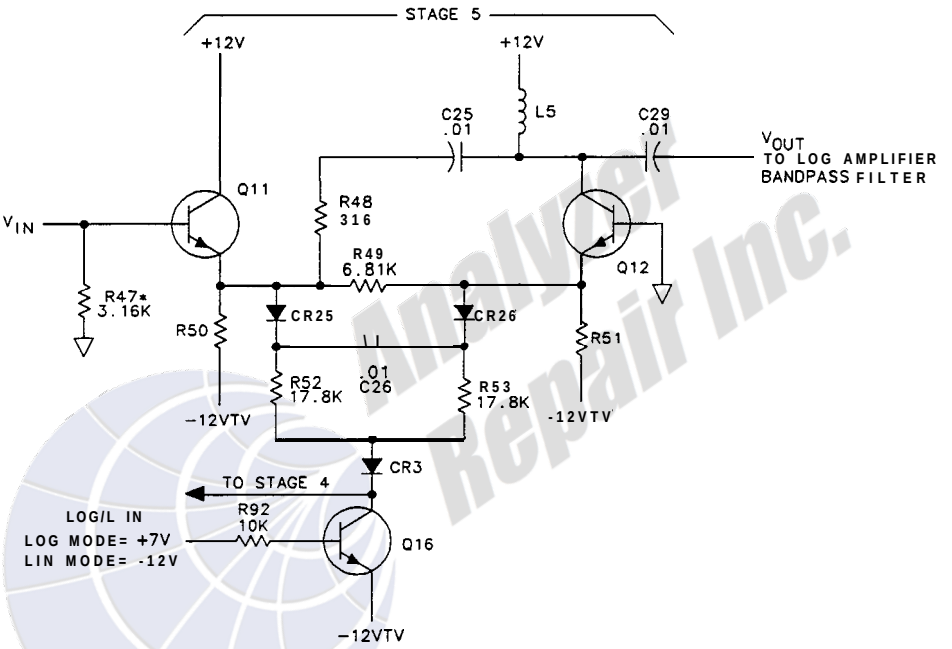

Figure 1. Log Amplifier Stage, Simplified Schematic

Log Stages

All nine of the log amplifier stages in A4A2 and A4A3 are similar in operation, although there are variations in certain stages. While all stages except the first three contain two log diodes each, the first two stages contain six diodes each, and the third contains four diodes. More diodes are used in Stages 1 through 3 because these stages have their logging action at higher signal levels than the other log stages. Log diodes of Stages 1 and 2 are biased so that the logging action occurs at signal levels of approximately 0 dBm to $10 dBm, whereas the remaining stages log at lower signal levels. To provide proper log fidelity (log amplifier output versus input), attenuation is required between the output of a higher level log stage and the input of a lower level log stage. Resistive divider R20, R29, and R30 attenuates the output of Stage 2, and a similar attenuator is used between Stages 3 and 4. Resistors in series with the log diodes of Stage 1 through 3 are factory-selected to compensate for variations in log diode resistance. Correct stage gain is required for proper log fidelity. Refer to the A4A3 schematic note for the method of checking the gain of Stages 1 through 5 in log mode.

Analyzer Repair Inc.

10 dB Linear Gain Step

Stage 5 is used as a switchable 10 dB gain step in linear mode at low reference levels. When control line LG10 is low (-12 V typical), Q17 is off and CR27 is reverse biased, preventing CR27 from being a signal path. When control line LG10 is high (more positive than -3 V), the Q17 collector is saturated to the -12 VTV supply, and PIN diode CR27 is forward biased. LG10 adjustment R83 sets the bias current (and thus resistance) of PIN diode CR27. The resistance of CR27 plus R54 is set so that the gain of Stage 5 will increase by 10 dB when CR27 is turned on. (Refer to the foregoing gain formula.) Since PIN diode resistance is unaffected by signal level, Stage 5 operates as a non-limiting amplifier. This 10 dB gain step, in conjunction with a similar 20 dB gain step in A4A2, is used for the last 30 dB of step gain (lowest 30 dB of reference level) in linear mode. See the schematic note for the reference levels at which this gain step is checked.

Bandpass Filters ©

In narrow resolution bandwidths, noise generated in the log amplifiers is reduced by the Bandpass Filter following Log Amplifier Stage 5. The bandwidth of this filter is switchable between wide (>20 MHz) and narrow (about 1 MHz). In resolution bandwidths of 30 kHz or less, the filter bandwidth is narrow. This reduces the log amplifier noise contribution 90 dB down from the reference level. In resolution bandwidths of 100 kHz and greater, the bandwidth of the filter is wide enough so as not to affect the shape of the wide resolution bandwidth filters. (See Figure 2.)

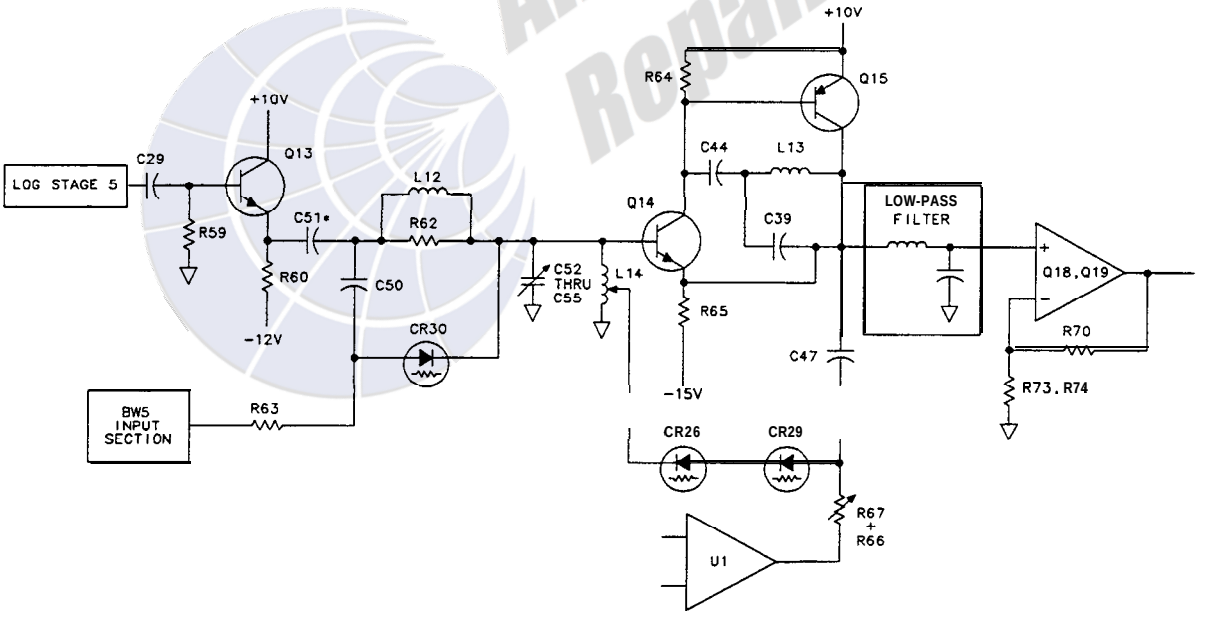

Figure 2. Bandpass Filter, Simplified Schematic

Bandpass Filter Switching

Emitter follower Q13 buffers the output of Log Amplifier Stage 5 and drives the Bandpass Filter. The filter bandwidth is determined by the resistance through which the LC tank network (L14 and C52 through C55) is driven. In resolution bandwidths of 3 MHz to 100 kHz, bandwidth control line BW5 is high (+15 V) and CR30 is forward biased through R63, resulting in a low filter drive impedance and wide bandwidth. When the analyzer resolution

bandwidth is less than 100 kHz, BW5 is low (about -0.6 V). CR30 is reverse biased, and the LC shunt network is driven through R62, setting the filter bandwidth at about 1 MHz. The signal is buffered by Q14 and Q15. The output of buffer amplifier Q14/Q15 provides a low impedance drive for the Low-Pass Filter. The Buffer Amplifier Q14/Q15 also drives the center tap of L14 through the resistance of PIN diodes CR28 and CR29. This feedback results in an apparent negative input resistance in parallel with L14. The negative input resistance compensates for the parallel resistance present in the tank circuit because of the Q of L14. The gain of the filter in narrow mode is set equal to that in wide mode by setting the resistance CR28 and CR29. The resistance of CR28 and CR29 is set by adjusting the diode bias current with FILTER AMPTD adjustment R67. L13 and C39 are frequency compensation for Q14 and Q15.

BW5 Input Section

TP7 and TP8 provide a means to adjust the bandpass filter for equal gain in wide and narrow modes. This can be done without changing IF bandwidth, which might in itself introduce an amplitude change. With the analyzer in narrow resolution bandwidths (30 kHz through 10 Hz), BW5 is approximately -0.6 V, which reverse biases CR30. This places the Bandpass Filter in narrow mode. The center frequency of the bandpass filter can be adjusted with CTR adjustment C55. To place the Bandpass Filter in wide mode, TP7 and TP8 are shorted together with a jumper wire. This forward biases CR30 through R89 and R63. Filter amplitude can then be set with FILTER AMPTD adjustment R67 so that amplitudes are equal in wide (test points jumpered) and narrow (jumper removed) modes.

Filter Temperature Compensation Ⓓ

The Filter Temperature Compensation circuit stabilizes the gain of the bandpass filter with temperature changes.

Op Amp U1 and associated circuitry provide temperature dependent bias for CR28 and CR29 to compensate for temperature-dependent change in the Q of L14 and the resistance of CR28 and CR29. As temperature increases, diode bias current increases as the voltage at U1 pin 6 increases. CR5 and CR6 operate as temperature-sensing elements to control the voltage at U1 pin 6.

Low-Pass Filter Ⓔ

The Low-Pass Filter consists of L15, L16, C56 through C59, R67, and R68. It has a bandwidth of about 30 MHz, which removes harmonics of the 21.4 HMz IF signal to reduce log fidelity variations between wide and narrow settings of the Bandpass Filter. The Low-Pass Filter has a loss of 6 dB, which is compensated for by buffer amplifier Q18/Q19, which has a gain of 6 dB. R74* is factory-selected to adjust the gain of Q18/Q19 for proper log fidelity.

A4A3 Log Amplifier-Filter, Troubleshooting

If the amplitude of the displayed signals is approximately 10 dB low (CAL OUTPUT appears to be -20 dBm) in the log mode but correct in the linear display mode, then one of the log amplifier stages in the A4A3 Log Amplifier-Filter board or the A4A2 Log Amplifier-Detector board is defective. Connect. a 10 dB step attenuator between the CAL OUTPUT and the spectrum analyzer input. Refer to the Log Amplifier Stage Gain Check note on the service sheets for the necessary front-panel control settings. When forward biased in log mode, the Schottky diodes should have voltage drops of 200 to 400 mV.

The following procedure will determine if the Linear Gain Steps, LG10 and LG20, are operating properly. The LG10 circuitry is located on the A4A3 Log Amplifier-Filter board while the LG20 circuitry is located on the A4A2 Log Amplifier-Detector board. Connect a 10 dB step attenuator set to 0 dB between the CAL OUTPUT and the spectrum analyzer input. Press Instrument Preset and key in the following settings:

[CENTER FREQUENCY] ..... equal to the CAL OUTPUT frequency

[FREQUENCY SPAN] ..... 10 kHz

[RES.BW.] ..... 3 kHz

[ATTEN] ..... 0 dB

[SHIFT] LOG SCALE [ENTER dB/DIV] (Turns off IF Step Gains)

[REFERENCE LEVEL] ..... -60 dBm

SCALE LIN

The peak of the displayed signal should be on the top graticule. Adjust the front panel AMPTD CAL control to place the peak of the signal one division below the top graticule. If the signal limits at the top of the display, one of the Linear Gain Steps is stuck in the on state.

Set the 10 dB step attenuator to 10 dB and key in [REFERENCE LEVEL] -70 dBm. The peak of the displayed signal should be one division below the top graticule. If signal limits at, the top of the display, the LG20 circuitry is defective. A signal approximately 3 divisions high indicates the LG10 circuitry is defective.

Set the 10 dB step attenuator to 20 dB and key in [REFERENCE LEVEL] -80 dBm. The peak of the displayed signal should be one division below the top graticule. The LG10 circuitry is defective if the signal limits at the top of the display. The LG20 circuitry is faulty if the displayed signal is approximately 3 divisions high.

The detector circuit. on the A4A2 Log Amplifier-Detector board is most easily checked with dc voltages. These are derived using 0 Hz [FREQUENCY SPAN] and attenuating the CAL OUTPUT signal. The easiest point to check the Detector output without removing boards is A4A1TP1. Connect a DVM to this test point. The voltage at A4A1TP1 should be +1 V for a signal displayed on the top graticule. The output will be 0.1 V less for each division down from the top in either the linear or the 10 dB/DIV log modes when the detector is operating properly.

Analyzer Repair Inc.

HP Part Number 85662-60009

A4A3 Log Amplifier-Filter

Reference Designatio	HP Part Number	C D	Qty	Description	Mfr Code	Mfr Part Number
A4A3	85662-6000	9	1	BOARD ASSEMBLY, LOG AMPLIFIER-FILTER (SERIAL PREFIXES: 2403A-3001A)	2848	85662-60009
A4A3C1	0160-2055	9	1	CAPACITOR-FXD .01UF +BO-20% 100VDC CER		805-504 Y5V 103Z
A4A3C2	0160-2055	9	1	CAPACITOR-FXD .01UF +80-20% 100VDC CER		805-504 Y5V 1032
A4A3C3	0160-2055	9	1	CAPACITOR-FXD .01UF +80-20% 100VDC CER		805-504 Y5V 103Z
A4A3C4	0160-2055	9	1	CAPACITOR-FXD .01UF +80-20% 100VDC CER		805-504 Y5V 1032
A4A3C5	0160-2055	9	1	CAPACITOR-FXD .01UF +80-20% 100VDC CER		805-504 Y5V 1032
A4A3C6	0160-2055	9	1	CAPACITOR-FXD .01UF +80-20% 100VDC CER		805-504 Y5V 103Z
A4A3C7	0160-2244	8	1	CAP-FXD 3pF 500 V	5276:	
A4A3C8	0160-2055	9	1	CAPACITOR-FXD .01UF +80-20% 100VDC CER		805-504 Y5V 103Z
A4A3C9	0160-2236	8	1	CAP-FXD 1pF 500 V	5276:	
A4A3C10	0160-2055	9	1	CAPACITOR-FXD .01UF +80-20% 100VDC CER		805-504 Y5V 1032
A4A3C11	0160-2055	9	1	CAPACITOR-FXD .01UF +80-20% 100VDC CER		805-504 Y5V 1032
A4A3C12	0160-2055	3	1	CAPACITOR-FXD .01UF +80-20% 100VDC CER		805-504 Y5V 1032
A4A3C13	0160-2055	3	1	CAPACITOR-FXD .01UF +80-20% 100VDC CER		805-504 Y5V 1032
A4A3C14	0160-2055	3	1	CAPACITOR-FXD .01UF +80-20% 100VDC CER		805-504 Y5V 1032
A4A3C15	3160-2055	3	1	CAPACITOR-FXD .01UF +80-20% 100VDC CER		805-504 Y5V 103Z
A4A3C16	0160-2055	3	1	CAPACITOR-FXD .01UF +80-20% 100VDC CER		805-504 Y5V 1032
A4A3C17	0160-2055	9	1	CAPACITOR-FXD .01UF +80-20% 100VDC CER		805-504 Y5V 1032
A4A3C18	X60-2055	9	1	CAPACITOR-FXO .01UF +80-20% 100VDC CER		805-504 Y5V 1032
A4A3C19	0160-2055	9	1	CAPACITOR-FXD .01UF +80-20% 100VDC CER		805-504 Y5V 103Z
A4A3C20	1160-2055	9	1	CAPACITOR-FXD .01UF +80-20% 100VDC CER		805-504 Y5V 103Z
A4A3C23	0160-2055	9	1	CAPACITOR-FXD .01UF +80-20% 100VDC CER		805-504 Y5V 1032
A4A3C24	0160-2055	9	1	CAPACITOR-FXD .01UF +80-20% 100VDC CER		805-504 Y5V 103Z
A4A3C25	0160-2055	9	1	CAPACITOR-FXD .01UF +80-20% 100VDC CER		805-504 Y5V 103Z
A4A3C26	0160-2055	9	1	CAPACITOR-FXD .01UF +80-20% 100VDC CER		805-504 Y5V 1032
A4A3C27	0160-2055	9	1	CAPACITOR-FXD .01UF +80-20% 100VDC CER		805-504 Y5V 103Z
A4A3C28	0160-2055	9	1	CAPACITOR-FXD .01UF +80-20% 100VDC CER		805-504 Y5V 1032
A4A3C29	1160-2055	9	1	CAPACITOR-FXD .01UF +80-20% 100VDC CER		805-504 Y5V 103Z
A4A3C31	1160-4297	5	1	CAPACITOR-FXD .022UF +80-20% IOOVDC CER		562CZC101AH223ZA23
A4A3C32	1160-4297	5	1	CAPACITOR-FXD .022UF +80-20% 100VDC CER		562CZC101AH223ZA23
A4A3C33	1160-2055	9	1	CAPACITOR-FXD .01UF +80-20% 100VDC CER		805-504 Y5V 1032
A4A3C34	0160-2055	9	1	CAPACITOR-FXD .01UF +80-20% 100VDC CER		805-504 Y5V 1032
A4A3C37	0160-4297	5	1	CAPACITOR-FXD .022UF +80-20% 100VDC CER		562CZC101AH223ZA23
A4A3C38	0160-2055	9	1	CAPACITOR-FXD .01UF +80-20% 100VDC CER		805-504 Y5V 1032
A4A3C39	0160-2255		1	CAP-FXD 8.2pF 500 V	52763	
A4A3C40	0160-2055	9	1	CAPACITOR-FXD .01UF +80-20% 100VDC CER		805-504 Y5V 103Z
A4A3C41	0160-4297	5	1	CAPACITOR-FXD .022UF +80-20% IOOVDC CER		562CZC101AH223ZA23
A4A3C42	0160-2055		1	CAPACITOR-FXD .01UF +80-20% 100VDC CER		805-504 Y5V 1032
A4A3C43	160-2055		1	CAPACITOR-FXD .01UF +80-20% 100VDC CER		805-504 Y5V 103Z
A4A3C44	160-2055		1	CAPACITOR-FXD .01UF +80-20% 100VDC CER		805-504 Y5V 1032
A4A3C45	160-2055		1	CAPACITOR-FXD .01UF +80-20% 100VDC CER		805-504 Y5V 1032
A4A3C46	160-2055		1	CAPACITOR-FXD .01UF +80-20% 100VDC CER		805-504 Y5V 1032
A4A3C47	160-2055	9	1	CAPACITOR-FXD .01UF +80-20% 100VDC CER		805-504 Y5V 1032
A4A3C48	160-2055		1	CAPACITOR-FXD .01UF +80-20% 100VDC CER		805-504 Y5V 103Z
A4A3C49	160-2055	9	1	CAPACITOR-FXD .01UF +80-20% 100VDC CER		805-504 Y5V 1032
A4A3C50	160-2055	9	1	CAPACITOR-FXD .01UF +80-20% 100VDC CER		805-504 Y5V 1032

**Indicates factory-selected value*

HP Part Number 85662-60009

A4A3 Log Amplifier-Fitter

Reference Designation	HP Part Number	CD	Qty	Description	Mfr Code	Mfr Part Number
A4A3C51*	0160-3533	0	1	CAPACITOR-FXD 470PF +-5% 300VDC MICA 0+7	09023	CD15FD471J03
A4A3C52*	0160-2252	8	1	CAPACITOR-FXD 6.2pF 500V	52763	
A4A3C53*	0160-0839	3	1	CAP-FXD 110pF 0 V MICA	09023	CD15FD111F03
A4A3C54	0160-0455	9	1	CAP-FXD 18pF 600 V		301-648-U2J0-110G
A4A3C55	0121-0493	3	1	CAPACITOR-V TRMR-AIR 1.7-11PF 175V PC-MT	74970	187-0306-125
A4A3C56	0160-2251	7	1	CAP-FXD 5.6pF 500 V	52763	
A4A3C57	0160-2236	8	1	CAP-FXD 1pF 500 V	52763	
A4A3C58	0160-2262	0	1	CAP-FXD 16pF 500 V	52763	
A4A3C59	0160-2252	8	1	CAP-FXD 6.2pF 500 V	52763	
A4A3C61	0160-2055	9	1	CAPACITOR-FXD .01UF +80-20% 100VDC CER		805-504 Y5V 103Z
A4A3C62	0160-2055	9	1	CAPACITOR-FXD .01UF +BO-20% 100VDC CER		805-504 Y5V 1032
A4A3C63	0160-2055	9	1	CAPACITOR-FXD .01UF +80-20% 100VDC CER		805-504 Y5V 1032
A4A3C65	0160-2055	9	1	CAPACITOR-FXD .01UF +80-20% 100VDC CER		805-504 Y5V 103Z
A4A3C66	0160-4297	5	1	CAPACITOR-FXD .022UF +80-20% 100VDC CER		562CZC101AH223ZA23
A4A3C67	0160-2055	9	1	CAPACITOR-FXD .01UF +80-20% 100VDC CER		805-504 Y5V 103Z
A4A3C68	0160-2055	9	1	CAPACITOR-FXD .01UF +80-20% 100VDC CER		805-504 Y5V 1032
A4A3C69	0160-2055	9	1	CAPACITOR-FXD .01UF +80-20% 100VDC CER		805-504 Y5V 103Z
A4A3C70	0160-2055	9	1	CAPACITOR-FXD .01UF +80-20% 100VDC CER		805-504 Y5V 1032
A4A3C71	0160-4297	5	1	CAPACITOR-FXD .022UF +80-20% 100VDC CER		562CZC101AH223ZA23
A4A3CR1	1901-0047	8	1	DIODE-SWITCHING 20V 75MA 10NS DO-35	71468	
A4A3CR2	1901-0047	8	1	DIODE-SWITCHING 20V 75MA 10NS DO-35	71468	
A4A3CR3	1901-0047	8	1	DIODE-SWITCHING 20V 75MA 10NS DO-35	71468	
A4A3CR4	1901-0047	8	1	DIODE-SWITCHING 20V 75MA IONS DO-35	71468	
A4A3CR5	85662-80026	2	1	DIODE-SWITCHING DTC-SELECTED 1901-0050	28480	85662-80026
A4A3CR6	85662-80026	2	1	DIODE-SWITCHING DTC-SELECTED 1901-0050	28480	85662-80026
A4A3CR7	1901-1085	6	1	DIODE-SCHOTTKY SM SIG	28480	
A4A3CR8	1901-1085	6	1	DIODE-SCHOTTKY SM SIG	28480	
A4A3CR9	1901-1085	6	1	DIODE-SCHOTTKY SM SIG	28480	
A4A3CR10	1901-1085	6	1	DIODE-SCHOTTKY SM SIG	28480	
A4A3CR11	1901-1085	6	1	DIODE-SCHOTTKY SM SIG	28480	
A4A3CR12	1901-1085	6	1	DIODE-SCHOTTKY SM SIG	28480	
A4A3CR13	1901-1085	6	1	DIODE-SCHOTTKY SM SIG	28480	
A4A3CR14	1901-1085	6	1	DIODE-SCHOTTKY SM SIG	28480	
A4A3CR15	1901-1085	6	1	DIODE-SCHOTTKY SM SIG	28480	
A4A3CR16	1901-1085	6	1	DIODE-SCHOTTKY SM SIG	28480	
A4A3CR17	1901-1085	6	1	DIODE-SCHOTTKY SM SIG	28480	
A4A3CR18	1901-1085	6	1	DIODE-SCHOTTKY SM SIG	28480	
A4A3CR19	1901-1085	6	1	DIODE-SCHOTTKY SM SIG	28480	
A4A3CR20	1901-1085	6	1	DIODE-SCHOTTKY SM SIG	28480	
A4A3CR21	1901-1085	6	1	DIODE-SCHOTTKY SM SIG	28480	
A4A3CR22	1901-1085	6	1	DIODE-SCHOTTKY SM SIG	28480	
A4A3CR23	1901-1085	6	1	DIODE-SCHOTTKY SM SIG	28480	
A4A3CR24	1901-1085	6	1	DIODE-SCHOTTKY SM SIG	28480	
A4A3CR25	1901-1085	6	1	DIODE-SCHOTTKY SM SIG	28480	
A4A3CR26	1901-1085	6	1	DIODE-SCHOTTKY SM SIG	28480	
A4A3CR27	1901-1070	9	1	DIODE-PIN 110V	28480	
A4A3CR28	1901-1070	9	1	DIODE-PIN 110V	28480	
A4A3CR29	1901-1070	9	1	DIODE-PIN 110V	28480	

**Indicates factory-selected value*

HP Part Number 85662-60009

A4A3 Log Amplifier-Filter

Reference Designation	HP Part Number	C D	Qty	Description	Mfr Code	Mfr Part Number
A4A3CR30	1901-1070	9	1	DIODE-PIN 110V	28480	
A4A3CR31	1901-0047	8	1	DIODE-SWITCHING 20V 75MA 10NS DO-35	71468	
A4A3E1	9170-0029	3	1	CORE-SHIELDING BEAD	02114	56-590-65A2/4A
A4A3E2	9170-0029	3	1	CORE-SHIELDING BEAD	02114	56-590-65A2/4A
A4A3E3	9170-0029	3	1	CORE-SHIELDING BEAD	02114	56-590-65A2/4A
A4A3E4	9170-0029	3	1	CORE-SHIELDING BEAD	02114	56-590-65A2/4A
A4A3E5	9170-0029	3	1	CORE-SHIELDING BEAD	02114	56-590-65A2/4A
A4A3E6	9170-0029	3	1	CORE-SHIELDING BEAD	02114	56-590-65A2/4A
A4A3E7	9170-0029	3	1	CORE-SHIELDING BEAD	02114	56-590-65A2/4A
A4A3E8	9170-0029	3	1	CORE-SHIELDING BEAD	02114	56-590-65A2/4A
A4A3E9	9170-0029	3	1	CORE-SHIELDING BEAD	02114	56-590-65A2/4A
A4A3E10	9170-0029	3	1	CORE-SHIELDING BEAD	02114	56-590-65A2/4A
A4A3E12	9170-0029	3	1	CORE-SHIELDING BEAD	02114	56-590-65A2/4A
A4A3L1	9100-1619	2	1	INDUCTOR RF-CH-MLD 6.8UH +-10% .166D-INX	99800	1537-32
A4A3L2	9140-0105	3	1	INDUCTOR RF-CH-MLD 8.2UH +-10% .166D-INX	99800	1537-34
A4A3L3	9140-0105	3	1	INDUCTOR RF-CH-MLD 8.2UH +-10% .166D-INX	99800	1537-34
A4A3L4	9140-0105	3	1	INDUCTOR RF-CH-MLD 8.2UH +-10% .166D-INX	99800	1537-34
A4A3L5	9140-0105	3	1	INDUCTOR RF-CH-MLD 8.2UH +-10% .166D-INX	99800	1537-34
A4A3L6	9100-1618	1	1	INDUCTOR RF-CH-MLD 5.6UH +-10% .166D-INX	99800	1537-30
A4A3L7	9100-1618	1	1	INDUCTOR RF-CH-MLD 5.6UH +-10% .166D-INX	99800	1537-30
A4A3L8	9100-1618	1	1	INDUCTOR RF-CH-MLD 5.6UH +-10% .166D-INX	99800	1537-30
A4A3L9	9100-1618	1	1	INDUCTOR RF-CH-MLD 5.6UH +-10% .166D-INX	99800	1537-30
A4A3L10	9100-1618	1	1	INDUCTOR RF-CH-MLD 5.6UH +-10% .166D-INX	99800	1537-30
A4A3L11	9100-1618	1	1	INDUCTOR RF-CH-MLD 5.6UH +-10% .166D-INX	99800	1537-30
A4A3L12	9100-1623	8	1	INDUCTOR RF-CH-MLD 27UH +-5% .166D-INX.3	99800	1537-48
A4A3L13	9140-0105	3	1	INDUCTOR RF-CH-MLD 8.2UH +-10% .166D-INX	99800	1537-34
A4A3L14	9100-3854	1	1	INDUCTOR 400NH +-10% .3D-INX1.016LG-IN		
A4A3L15	9140-0111	1	1	INDUCTOR RF-CH-MLD 3.3UH +-10% .166D-INX	99800	1537-24
A4A3L16	9140-0098	3	1	INDUCTOR RF-CH-MLD 2.2UH +-10% .166D-INX	99800	1537-20
A4A3MP1	6960-0069	3	1	PLUG-HOLE CNCL-HD FOR .125-D-HOLE NYL	02768	207-080501-00-0101
A4A3MP2				NOT ASSIGNED		
A4A3MP3	6960-0069	3	1	PLUG-HOLE CNCL-HD FOR .125-D-HOLE NYL	02768	207-080501-00-0101
A4A3MP4	6960-0069	3	1	PLUG-HOLE CNCL-HD FOR .125-D-HOLE NYL	02768	207-080501-00-0101
A4A3Q1	1854-0345	8	1	TRANSISTOR NPN 2N5179 SI TO-72 PD=200MW	04713	2N5179
A4A3Q2	1853-0007	7	1	TRANSISTOR PNP 213251 SI TO-18 PD=360MW	04713	213251
A4A3Q3	1854-0019	3	1	TRANSISTOR NPN SI TO-18 PD=360MW	04713	
A4A3Q4	1854-0019	3	1	TRANSISTOR NPN SI TO-18 PD=360MW	04713	
A4A3Q5	1853-0007	7	1	TRANSISTOR PNP 2N3251 SI TO-18 PD=360MW	04713	2N3251
A4A3Q6	1854-0019	3	1	TRANSISTOR NPN SI TO-18 PD=360MW	04713	
A4A3Q7	1854-0019	3	1	TRANSISTOR NPN SI TO-18 PD=360MW	04713	
A4A3Q8	1854-0019	3	1	TRANSISTOR NPN SI TO-18 PD=360MW	04713	
A4A3Q9	1854-0019	3	1	TRANSISTOR NPN SI TO-18 PD=360MW	04713	
A4A3Q10	1854-0019	3	1	TRANSISTOR NPN SI TO-18 PD=360MW	04713	
A4A3Q11	1854-0019	3	1	TRANSISTOR NPN SI TO-18 PD=360MW	04713	
A4A3Q12	1854-0019	3	1	TRANSISTOR NPN SI TO-18 PD=360MW	04713	
A4A3Q13	1854-0019	3	1	TRANSISTOR NPN SI TO-18 PD=360MW	04713	
A4A3Q14	1854-0686	0	1	TRANSISTOR NPN SI TO-72 PD=200MW FT=4GHZ	25403	

**Indicates factory-selected value*

HP Part Number 85662-60009

A4A3 Log Amplifier-Filter

Reference Designation	HP Part Number	CD	Qty	Description	Mfr Code	Mfr Part Number
A4A3Q15	1853-0007	7	1	TRANSISTOR PNP 213251 SI TO-18 PD=360MW	04713	2N3251
A4A3Q16	1854-0404	0	1	TRANSISTOR NPN SI TO-18 PD=360MW	04713	
A4A3Q17	1854-0404	0	1	TRANSISTOR NPN SI TO-18 PD=360MW	04713	
A4A3Q18	1854-0019	3	1	TRANSISTOR NPN SI TO-18 PD=360MW	04713	
A4A3Q19	1853-0405	9	1	TRANSISTOR PNP SI PD=300MW FT=850MHZ	04713	2N4209
A4A3R2	0757-0346	2	1	RESISTOR 10 +-1% .125W TF TC=0+-100	91637	CMF-55-1, T-1
A4A3R4	0757-0346	2	1	RESISTOR 10 +-1% .125W TF TC=0+-100	91637	CMF-55-1, T-1
A4A3R5	0757-0346	2	1	RESISTOR 10 +-1% .125W TF TC=0+-100	91637	CMF-55-1. T-1
A4A3R6	0757-0346	2	1	RESISTOR 10 +-1% .125W TF TC=0+-100	91637	CMF-55-1. T-1
A4A3R7	0757-0346	2	1	RESISTOR 10 +-1% .125W TF TC=0+-100	91637	CMF-55-1, T-1
A4A3R8	0757-0401	0	1	RESISTOR 100 +-1% .125W TF TC=0+-100	19701	SFR25H
A4A3R9	0757-0439	4	1	RESISTOR 6.81K +-1% .125W TF TC=D+-100	19701	SFR25H
A4A3R10	0698-3444	1	1	RESISTOR 316 1% .125W TF TC=0+-100	19701	SFR25H
A4A3R11	0698-3439	4	1	RESISTOR 178 1% .125W TF TC=0+-100	19701	SFR25H
A4A3R12	0698-3429	2	1	RESISTOR 19.6 1% .125W TF TC=0+-100	19701	SFR25H
A4A3R13	0757-0279	0	1	RESISTOR 3.16K +-1% .125W TF TC=0+-100	19701	SFR25H
A4A3R14	0757-0279	0	1	RESISTOR 3.16K +-1% .125W TF TC=0+-100	19701	SFR25H
A4A3R15*	0757-0394	0	1	RESISTOR 51.1 +-1% .125W TF TC=0+-100	19701	SFR25H
A4A3R16	0698-0083	8	1	RESISTOR 1.96K 1% .125W TF TC=0+-100	19701	SFR25H
A4A3R17	0698-0085	0	1	RESISTOR 2.61K 1% .125W TF TC=0+-100	19701	SFR25H
A4A3R19	0757-0439	4	1	RESISTOR 6.81K +-1% .125W TF TC=0+-100	19701	SFR25H
A4A3R20	0698-3444	1	1	RESISTOR 316 1% .125W TF TC=0+-100	19701	SFR25H
A4A3R21	0698-3429	2	1	RESISTOR 19.6 1% .125W TF TC=0+-100	19701	SFR25H
A4A3R22	0698-3439	4	1	RESISTOR 178 1% .125W TF TC=0+-100	19701	SFR25H
A4A3R23	0757-0274	5	1	RESISTOR 1.21K +-1% .125W TF TC=0+-100	19701	SFR25H
A4A3R24	0757-0279	0	1	RESISTOR 3.16K +-1% .125W TF TC=0+-100	19701	SFR25H
A4A3R25*	0757-0394	0	1	RESISTOR 51.1 +-1% .125W TF TC=0+-100	19701	SFR25H
A4A3R26	0698-0085	0	1	RESISTOR 2.61K 1% .125W TF TC=0+-100	19701	SFR25H
A4A3R27	0698-0083	8	1	RESISTOR 1.96K 1% .125W TF TC=0+-100	19701	SFR25H
A4A3R29*	0698-3440	7	1	RESISTOR 196 1% .125W TF TC=0+-100	19701	SFR25H
A4A3R30	0698-3444	1	1	RESISTOR 316 1% .125W TF TC=0+-100	19701	SFR25H
A4A3R31	0698-3444	1	1	RESISTOR 316 1% .125W TF TC=0+-100	19701	SFR25H
A4A3R32	0757-0439	4	1	RESISTOR 6.81K +-1% .125W TF TC=0+-100	19701	SFR25H
A4A3R33	0757-0279	0	1	RESISTOR 3.16K +-1% .125W TF TC=0+-100	19701	SFR25H
A4A3R34	0757-0279	0	1	RESISTOR 3.16K +-1% .125W TF TC=0+-100	19701	SFR25H
A4A3R35*	0757-0180	2	1	RESISTOR 31.6 +-1% .125W TF TC=0+-100	19701	SFR25H
A4A3R36	0757-0440	7	1	RESISTOR 7.5K +-1% .125W TF TC=0+-100	19701	SFR25H
A4A3R37	0757-0440	7	1	RESISTOR 7.5K +-1% .125W TF TC=0+-100	19701	SFR25H
A4A3R38*	0698-3443	0	1	RESISTOR 287 1% .125W TF TC=D+-100	19701	SFR25H
A4A3R39	0698-3446	3	1	RESISTOR 383 1% .125W TF TC=0+-100	19701	SFR25H
A4A3R40	0698-3444	1	1	RESISTOR 316 1% .125W TF TC=0+-100	19701	SFR25H
A4A3R41	0757-0439	4	1	RESISTOR 6.81K +-1% .125W TF TC=0+-100	19701	SFR25H
A4A3R42	0757-0279	0	1	RESISTOR 3.16K +-1% .125W TF TC=0+-100	19701	SFR25H
A4A3R43	0757-0279	0	1	RESISTOR 3.16K +-1% .125W TF TC=0+-100	19701	SFR25H
A4A3R44	0757-0447	4	1	RESISTOR 16.2K +-1% .125W TF TC=0+-100	19701	SFR25H
A4A3R45	0757-0447	4	1	RESISTOR 16.2K +-1% .125W TF TC=0+-100	19701	SFR25H
A4A3R47*	0757-0279	0	1	RESISTOR 3.16K +-1% .125W TF TC=0+-100	19701	SFR25H
A4A3R48	0698-3444	1	1	RESISTOR 316 1% .125W TF TC=0+-100	19701	SFR25H

Indicates facto y-selected value

HP Part Number 85662-60009

A4A3 Log Amplifier-Filter

Reference Designatior	HP Part Number	C D	Qty	Description	Mfr Code	Mfr Part Number
A4A3R49	0757-0439		1	RESISTOR 6.81K +-1% .125W TF TC=0+-100	19701	SFR25H
A4A3R50	0757-0279	(	1	RESISTOR 3.16K +-1% .125W TF TC=0+-100	19701	SFR25H
A4A3R51	0757-0279	(	1	RESISTOR 3.16K +-1% .125W TF TC=0+-100	19701	SFR25H
A4A3R52	0757-0447	4	1	RESISTOR 16.2K +-1% .125W TF TC=0+-100	19701	SFR25H
A4A3R53	0757-0447	4	1	RESISTOR 16.2K +-1% .125W TF TC=0+-100	19701	SFR25H
A4A3R54*	0757-0399	!	1	RESISTOR 82.5 +-1% .125W TF TC=0+-100	19701	SFR25H
A4A3R57	0757-0442	(	1	RESISTOR 10K +-1% .125W TF TC=0+-100	19701	SFR25H
A4A3R59	0757-0439	4	1	RESISTOR 6.81K +-1% .125W TF TC=0+-100	19701	SFR25H
A4A3R60	0698-0084	9	1	RESISTOR 2.15K 1% .125W TF TC=D+-100	19701	SFR25H
A4A3R61	0698-0082	7	1	RESISTOR 464 1% .125W TF TC=0+-100	19701	SFR25H
A4A3R62	0757-0274	5	1	RESISTOR 1.21K +-1% .125W TF TC=0+-100	19701	SFR25H
A4A3R63	0757-0439	4	1	RESISTOR 6.81K +-1% .125W TF TC=0+-100	19701	SFR25H
A4A3R64	0698-3439	4	1	RESISTOR 178 1% .125W TF TC=0+-100	19701	SFR25H
A4A3R65	0757-0274	5	1	RESISTOR 1.21K +-1% .125W TF TC=0+-100	19701	SFR25H
A4A3R66*	0757-0466	7	1	RESISTOR 110K +-1% .125W TF TC=0+-100	19701	SFR25H
A4A3R67	2100-3054	6	1	RESISTOR-TRMR 50K 10% TKF SIDE-ADJ 17-TR	73138	89PR50K
A4A3R68	0698-0082	7	1	RESISTOR 464 1% .125W TF TC=0+-100	19701	SFR25H
A4A3R69	0698-3444	1	1	RESISTOR 316 1% .125W TF TC=0+-100	19701	SFR25H
A4A3R70	0757-0416	7	1	RESISTOR 511 +-1% .125W TF TC=0+-100	19701	SFR25H
A4A3R71	0757-0394	C	1	RESISTOR 51.1 +-1% .125W TF TC=0+-100	19701	SFR25H
A4A3R72	0757-0280	3	1	RESISTOR 1K +-1% .125W TF TC=0+-100	19701	SFR25H
A4A3R73	0757-0418	9	1	RESISTOR 619 +-1% .125W TF TC=0+-100	19701	SFR25H
A4A3R74*	0757-0279	0	1	RESISTOR 3.16K +-1% .125W TF TC=D+-100	19701	SFR25H
A4A3R76	0757-0442	9	1	RESISTOR 10K +-1% .125W TF TC=0+-100	19701	SFR25H
A4A3R77	0757-0442	9	1	RESISTOR 10K +-1% .125W TF TC=0+-100	19701	SFR25H
A4A3R78	0757-0442	9	1	RESISTOR 10K +-1% .125W TF TC=0+-100	19701	SFR25H
A4A3R79*	0757-0458	7	1	RESISTOR 51.1K +-1% .125W TF TC=0+-100	19701	SFR25H
A4A3R80*	0698-0083	8	1	RESISTOR 1.96K 1% .125W TF TC=0+-100	19701	SFR25H
A4A3R81*	3757-0447	4	1	RESISTOR 16.2K +-1% .125W TF TC=0+-100	19701	SFR25H
A4A3R82	0757-0279	0	1	RESISTOR 3.16K +-1% .125W TF TC=0+-100	19701	SFR25H
A4A3R83	2100-3161	6	1	RESISTOR-TRMR 20K 10% TKF SIDE-ADJ 17-TR	73138	89PR20K
A4A3R84	1757-0279	0	1	RESISTOR 3.16K +-1% .125W TF TC=0+-100	19701	SFR25H
A4A3R85	1757-0442	9	1	RESISTOR 10K +-1% .125W TF TC=0+-100	19701	SFR25H
A4A3R87	1757-0346	2	1	RESISTOR 10 +-1% .125W TF TC=0+-100	91637	CMF-55-1. T-1
A4A3R88	1698-3160	8	1	RESISTOR 31.6K 1% .125W TF TC=0+-100	19701	SFR25H
A4A3R89	0757-0280	3	1	RESISTOR 1K +-1% .125W TF TC=0+-100	19701	SFR25H
A4A3R90	0757-0465	6	1	RESISTOR 100K +-1% .125W TF TC=0+-100	19701	SFR25H
A4A3R92	0757-0442	9	1	RESISTOR 10K +-1% .125W TF TC=0+-100	19701	SFR25H
A4A3R93	0757-0280	3	1	RESISTOR 1K +-1% .125W TF TC=0+-100	19701	SFR25H
A4A3TP1	1251-0600	0	1	CONNECTOR-SGL CONT PIN 1.14-MM-BSC-SZ SQ	27264	16-06-0034
A4A3TP2	1251-0600	0	1	CONNECTOR-SGL CONT PIN 1.14-MM-BSC-SZ SQ	27264	16-06-0034
A4A3TP3	1251-0600	0	1	CONNECTOR-SGL CONT PIN 1.14-MM-BSC-SZ SQ	27264	16-06-0034
A4A3TP4	1251-0600	3	1	CONNECTOR-SGL CONT PIN 1.14-MM-BSC-SZ SQ	27264	16-06-0034
A4A3TP5	1251-0600	3	1	CONNECTOR-SGL CONT PIN 1.14-MM-BSC-SZ SQ	27264	16-06-0034
A4A3TP6	1251-0600	3	1	CONNECTOR-SGL CONT PIN 1.14-MM-BSC-SZ SQ	27264	16-06-0034
A4A3TP7	1251-0600	3	1	CONNECTOR-SGL CONT PIN 1.14-MM-BSC-SZ SQ	27264	16-06-0034
A4A3TP8	1251-0600	3	1	CONNECTOR-SGL CONT PIN 1.14-MM-BSC-SZ SQ	27264	16-06-0034

**Indicates factory-selected value*

HP Part Number 85662160009

A4A3 Log Amplifier-Filter

Reference Designation	HP Part Number	CD	Qty	Description	Mfr Code	Mfr Part Number
A4A3TP9	1251-0600	0	1	CONNECTOR-SGL CONT PIN 1.14-MM-BSC-SZ SQ	27264	16-06-0034
A4A3TP10	1251-0600	0	1	CONNECTOR-SGL CONT PIN 1.14-MM-BSC-SZ SQ	27264	16-06-0034
A4A3TP11	1251-0600	0	1	CONNECTOR-SGL CONT PIN 1.14-MM-BSC-SZ SQ	27264	16-06-0034
A4A3TP12	0360-0124	3	1	CONNECTOR-SGL CONT PIN .04-IN-BSC-SZ RND	97300	
A4A3U1	1826-1058	3	1	IC OP AMP GP 8-TO-99 PKG	06665	OP-02CJ
A4A3VR1	1902-0126	6	1	DIODE-ZNR 2.61V 5% DO-7 PD=.4W TC=-.072%	04713	
A4A3VR2	1902-0579	3	1	DIODE-ZNR 5.1V 5% PD=1W IR=10UA	04713	
A4A3VR3	1902-0041	4	1	DIODE-ZNR 5.11V 5% DO-35 PD=.4W	04713	

Analyzer Repair Inc.

**Indicates factory-selected value*

HP Part Number 85662-60246

A4A3 Log Amplifier-Filter

Reference Designatio	HP Part Number	C D	Qty	Description	Mfr Code	Mfr Part Number
A4A3	85662-60246		1	BOARD ASSEMBLY, LOG AMPLIFIER-FILTER (SERIAL PREFIXES: 3001A AND ABOVE)	2848(	85662-60246
A4A3C1	0160-2055		1	CAPACITOR-FXD .01UF +BO-20% 100VDC CER		805-504 Y5V 103Z
A4A3C2	0160-2055		1	CAPACITOR-FXD .01UF +80-20% 100VDC CER		805-504 Y5V 103Z
A4A3C3	0160-2055		1	CAPACITOR-FXD .01UF +BO-20% 100VDC CER		805-504 Y5V 103Z
A4A3C4	0160-2055		1	CAPACITOR-FXD .01UF +80-20% 100VDC CER		805-504 Y5V 103Z
A4A3C5	0160-2055		1	CAPACITOR-FXD .01UF +80-20% 100VDC CER		805-504 Y5V 103Z
A4A3C6	0160-2055		1	CAPACITOR-FXD .01UF +80-20% 100VDC CER		805-504 Y5V 103Z
A4A3C7	0160-2244		1	CAP-FXD 3pF 500 V	52763	
A4A3C8	0160-2055		1	CAPACITOR-FXD .01UF +80-20% 100VDC CER		805-504 Y5V 103Z
A4A3C9	0160-2236		1	CAP-FXD 1pF 500 V	52763	
A4A3C10	0160-2055		1	CAPACITOR-FXD .01UF +80-20% 100VDC CER		805-504 Y5V 103Z
A4A3C11	0160-2055		1	CAPACITOR-FXD .01UF +80-20% 100VDC CER		805-504 Y5V 103Z
A4A3C12	0160-2055		1	CAPACITOR-FXD .01UF +80-20% 100VDC CER		805-504 Y5V 103Z
A4A3C13	0160-2055		1	CAPACITOR-FXD .01UF +80-20% 100VDC CER		805-504 Y5V 103Z
A4A3C14	0160-2055		1	CAPACITOR-FXD .01UF +BO-20% 100VDC CER		805-504 Y5V 103Z
A4A3C15	0160-2055		1	CAPACITOR-FXD .01UF +80-20% 100VDC CER		805-504 Y5V 103Z
A4A3C16	0160-2055		1	CAPACITOR-FXD .01UF +80-20% 100VDC CER		805-504 Y5V 103Z
A4A3C17	0160-2055		1	CAPACITOR-FXD .01UF +80-20% 100VDC CER		805-504 Y5V 103Z
A4A3C18	3160-2055		1	CAPACITOR-FXD .01UF +80-20% 100VDC CER		805-504 Y5V 103Z
A4A3C19	1160-2055		1	CAPACITOR-FXD .01UF +80-20% 100VDC CER		805-504 Y5V 103Z
A4A3C20	0160-2055		1	CAPACITOR-FXD .01UF +80-20% 100VDC CER		805-504 Y5V 103Z
A4A3C23	0160-2055		1	CAPACITOR-FXD .01UF +80-20% 100VDC CER		805-504 Y5V 103Z
A4A3C24	0160-2055		1	CAPACITOR-FXD .01UF +80-20% 100VDC CER		805-504 Y5V 103Z
A4A3C25	1160-2055		1	CAPACITOR-FXD .01UF +80-20% 100VDC CER		805-504 Y5V 103Z
A4A3C26	1160-2055		1	CAPACITOR-FXD .01UF +80-20% 100VDC CER		805-504 Y5V 103Z
A4A3C27	1160-2055		1	CAPACITOR-FXD .01UF +80-20% 100VDC CER		805-504 Y5V 103Z
A4A3C28	0160-2055		1	CAPACITOR-FXD .01UF +80-20% 100VDC CER		805-504 Y5V 103Z
A4A3C29	0160-2055		1	CAPACITOR-FXD .01UF +80-20% 100VDC CER		805-504 Y5V 103Z
A4A3C31	0160-4297		1	CAPACITOR-FXD .022UF +BD-20% 100VDC CER		562CZC101AH223ZA23
A4A3C32	0160-4297		1	CAPACITOR-FXD .022UF +80-20% 100VDC CER		562CZC101AH223ZA23
A4A3C33	0160-2055		1	CAPACITOR-FXD .01UF +80-20% 100VDC CER		805-504 Y5V 103Z
A4A3C34	0160-2055		1	CAPACITOR-FXD .01UF +80-20% 100VDC CER		805-504 Y5V 103Z
A4A3C37	1160-4297		1	CAPACITOR-FXD .022UF +80-20% 100VDC CER		562CZC101AH223ZA23
A4A3C38	0160-2055		1	CAPACITOR-FXD .01UF +80-20% 100VDC CER		805-504 Y5V 103Z
A4A3C39	1160-2255		1	CAP-FXD 8.2pF 500 V	52763	
A4A3C40	1160-2055		1	CAPACITOR-FXD .01UF +80-20% 100VDC CER		805-504 Y5V 103Z
A4A3C41	0160-4297		1	CAPACITOR-FXD .022UF +80-20% 100VDC CER		562CZC101AH223ZA23
A4A3C42	1160-2055		1	CAPACITOR-FXD .01UF +80-20% 100VDC CER		805-504 Y5V 103Z
A4A3C43	0160-2055		1	CAPACITOR-FXD .01UF +80-20% 100VDC CER		805-504 Y5V 103Z
A4A3C44	0160-2055		1	CAPACITOR-FXD .01UF +80-20% 100VDC CER		805-504 Y5V 103Z
A4A3C45	0160-2055		1	CAPACITOR-FXD .01UF +80-20% 100VDC CER		805-504 Y5V 103Z
A4A3C46	0160-2055		1	CAPACITOR-FXD .01UF +BO-20% 100VDC CER		805-504 Y5V 103Z
A4A3C47	0160-2055		1	CAPACITOR-FXD .01UF +80-20% 100VDC CER		805-504 Y5V 103Z
A4A3C48	160-2055		1	CAPACITOR-FXD .01UF +80-20% 100VDC CER		805-504 Y5V 103Z
A4A3C49	160-2055		1	CAPACITOR-FXD .01UF +80-20% 100VDC CER		805-504 Y5V 103Z
A4A3C50	160-2055		1	CAPACITOR-FXD .01UF +80-20% 100VDC CER		805-504 Y5V 103Z

**Indicates factory-selected value*

HP Part Number 85662-60246

A4A3 Log Amplifier-Filter

Reference Designatio	HP Part Number	C D	Qty	Description	Mfr Code	Mfr Part Number
A4A3C51*	0160-3533		1	CAPACITOR-FXD 470PF +-5% 300VDC MICA 0+	0902:	CD15FD471J03
A4A3C52*	0160-2252		1	CAPACITOR-FXD 6.2pF 500V	5276:	
A4A3C53*	0160-0839		1	CAP-FXD 110pF 300 V MICA	0902:	CD15FD111F03
A4A3C54	0160-0455		1	CAP-FXD 18pF 600 V		301-648-U2J0-110G
A4A3C55	0121-0493		1	CAPACITOR-V TRMR-AIR 1.7-11PF 175V PC-M	7497(	187-0306-125
A4A3C56	0160-2251		1	CAP-FXD 5.6pF 500 V	5276:	
A4A3C57	0160-2236		1	CAP-FXD 1pF 500 V	5276:	
A4A3C58	0160-2262		1	CAP-FXD 16pF 500 V	5276:	
A4A3C59	0160-2252		1	CAP-FXD 6.2pF 500 V	5276:	
A4A3C61	0160-2055		1	CAPACITOR-FXD .01UF +80-20% 100VDC CER		805-504 Y5V 1032
A4A3C62	0160-2055		1	CAPACITOR-FXD .01UF +80-20% 100VDC CER		805-504 Y5V 103Z
A4A3C63	0160-2055		1	CAPACITOR-FXD .01UF +80-20% 100VDC CER		805-504 Y5V 1032
A4A3C65	0160-2055		1	CAPACITOR-FXD .01UF +80-20% 100VDC CER		805-504 Y5V 1032
A4A3C66	0160-4297		1	CAPACITOR-FXD .022UF +80-20% 100VDC CER		562CZC101AH223ZA23
A4A3C67	0160-2055		1	CAPACITOR-FXD .01UF +80-20% 100VDC CER		805-504 Y5V 103Z
A4A3C68	1160-2055		1	CAPACITOR-FXD .01UF +80-20% 100VDC CER		805-504 Y5V 103Z
A4A3C69	0160-2055		1	CAPACITOR-FXD .01UF +80-20% 100VDC CER		805-504 Y5V 103Z
A4A3C70	1160-2055		1	CAPACITOR-FXD .01UF +80-20% 100VDC CER		805-504 Y5V 103Z
A4A3C71	1160-4297		1	CAPACITOR-FXD .022UF +80-20% 100VDC CER		562CZC101AH223ZA23
A4A3CR1	1901-0047		1	DIODE-SWITCHING 20V 75MA 10NS DO-35	71468	
A4A3CR2	1901-0047		1	DIODE-SWITCHING 20V 75MA 10NS DO-35	71468	
A4A3CR3	1901-0047		1	DIODE-SWITCHING 20V 75MA 10NS DO-35	71468	
A4A3CR4	1901-0047		1	DIODE-SWITCHING 20V 75MA 10NS DO-35	71468	
A4A3CR5	15662-80026		1	DIODE-SWITCHING DTC-SELECTED 1901-0050	28480	85662-80026
A4A3CR6	15662-80026		1	DIODE-SWITCHING DTC-SELECTED 1901-0050	28480	85662-80026
A4A3CR7	1901-1085		1	DIODE-SCHOTTKY SM SIG	28480	
A4A3CR8	1901-1085		1	DIODE-SCHOTTKY SM SIG	28480	
A4A3CR9	1901-1085		1	DIODE-SCHOTTKY SM SIG	28480	
A4A3CR10	1901-1085		1	DIODE-SCHOTTKY SM SIG	28480	
A4A3CR11	901-1085		1	DIODE-SCHOTTKY SM SIG	28480	
A4A3CR12	901-1085		1	DIODE-SCHOTTKY SM SIG	28480	
A4A3CR13	901-1085		1	DIODE-SCHOTTKY SM SIG	28480	
A4A3CR14	901-1085		1	DIODE-SCHOTTKY SM SIG	28480	
A4A3CR15	901-1085		1	DIODE-SCHOTTKY SM SIG	28480	
A4A3CR16	901-1085		1	DIODE-SCHOTTKY SM SIG	28480	
A4A3CR17	901-1085		1	DIODE-SCHOTTKY SM SIG	28480	
A4A3CR18	901-1085		1	DIODE-SCHOTTKY SM SIG	28480	
A4A3CR19	901-1085		1	DIODE-SCHOTTKY SM SIG	28480	
A4A3CR20	901-1085		1	DIODE-SCHOTTKY SM SIG	28480	
A4A3CR21	901-1085		1	DIODE-SCHOTTKY SM SIG	28480	
A4A3CR22	901-1085		1	DIODE-SCHOTTKY SM SIG	28480	
A4A3CR23	901-1085		1	DIODE-SCHOTTKY SM SIG	28480	
A4A3CR24	901-1085		1	DIODE-SCHOTTKY SM SIG	28480	
A4A3CR25	901-1085		1	DIODE-SCHOTTKY SM SIG	28480	
A4A3CR26	901-1085		1	DIODE-SCHOTTKY SM SIG	28480	
A4A3CR27	901-1070		1	DIODE-PIN 110V	28480	
A4A3CR28	901-1070		1	DIODE-PIN 110V	28480	
A4A3CR29	901-1070		1	DIODE-PIN 110V	28480	

Indicates factory-selected value

HP Part Number 85662-60246

A4A3 Log Amplifier-Filter

Reference Designation	HP Part Number	C D	Qty	Description	Mfr Code	Mfr Part Number
A4A3CR30	1901-1070	9	1	DIODE-PIN 110V	2848C	
A4A3CR31	1901-0047	8	1	DIODE-SWITCHING 20V 75MA 10NS DO-35	71468	
A4A3CR32	1901-1085	6	1	DIODE-SCHOTTKY SM SIG	2848C	
A4A3CR33	1901-1085	6	1	DIODE-SCHOTTKY SM SIG	2848C	
A4A3CR34	1901-1085	6	1	DIODE-SCHOTTKY SM SIG	2848C	
A4A3CR35	1901-1085	6	1	DIODE-SCHOTTKY SM SIG	2848C	
A4A3E1	9170-0029	3	1	CORE-SHIELDING BEAD	02114	56-590-65A2/4A
A4A3E2	9170-0029	3	1	CORE-SHIELDING BEAD	02114	56-590-65A2/4A
A4A3E3	9170-0029	3	1	CORE-SHIELDING BEAD	02114	56-590-65A2/4A
A4A3E4	9170-0029	3	1	CORE-SHIELDING BEAD	02114	56-590-65A2/4A
A4A3E5	9170-0029	3	1	CORE-SHIELDING BEAD	02114	56-590-65A2/4A
A4A3E6	9170-0029	3	1	CORE-SHIELDING BEAD	02114	56-590-65A2/4A
A4A3E7	9170-0029	3	1	CORE-SHIELDING BEAD	02114	56-590-65A2/4A
A4A3E8	9170-0029	3	1	CORE-SHIELDING BEAD	02114	56-590-65A2/4A
A4A3E9	9170-0029	3	1	CORE-SHIELDING BEAD	02114	56-590-65A2/4A
A4A3E10	9170-0029	3	1	CORE-SHIELDING BEAD	02114	56-590-65A2/4A
A4A3E12	9170-0029	3	1	CORE-SHIELDING BEAD	02114	56-590-65A2/4A
A4A3L1	9100-1619	2	1	INDUCTOR RF-CH-MLD 6.8UH +-10% .166D-INX	99800	1537-32
A4A3L2	9140-0105	3	1	INDUCTOR RF-CH-MLD 8.2UH +-10% .166D-INX	99800	1537-34
A4A3L3	9140-0105	3	1	INDUCTOR RF-CH-MLD 8.2UH +-10% .166D-INX	99800	1537-34
A4A3L4	9140-0105	3	1	INDUCTOR RF-CH-MLD 8.2UH +-10% .166D-INX	99800	1537-34
A4A3L5	9140-0105	3	1	INDUCTOR RF-CH-MLD 8.2UH +-10% .166D-INX	99800	1537-34
A4A3L6	9100-1618	1	1	INDUCTOR RF-CH-MLD 5.6UH +-10% .166D-INX	99800	1537-30
A4A3L7	9100-1618	1	1	INDUCTOR RF-CH-MLD 5.6UH +-10% .166D-INX	99800	1537-30
A4A3L8	9100-1618	1	1	INDUCTOR RF-CH-MLD 5.6UH +-10% .166D-INX	99800	1537-30
A4A3L9	3100-1618	1	1	INDUCTOR RF-CH-MLD 5.6UH +-10% .166D-INX	99800	1537-30
A4A3L10	9100-1618	1	1	INDUCTOR RF-CH-MLD 5.6UH +-10% .166D-INX	99800	1537-30
A4A3L11	3100-1618	1	1	INDUCTOR RF-CH-MLD 5.6UH +-10% .166D-INX	99800	1537-30
A4A3L12	3100-1623	8	1	INDUCTOR RF-CH-MLD 27UH +-5% .166D-INX.3	99800	1537-48
A4A3L13	3140-0105	3	1	INDUCTOR RF-CH-MLD 8.2UH +-10% .166D-INX	99800	1537-34
A4A3L14	9100-3854	1	1	INDUCTOR 400NH +-10% .3D-INX1.016LG-IN		
A4A3L15	3140-0111	1	1	INDUCTOR RF-CH-MLD 3.3UH +-10% .166D-INX	99800	1537-24
A4A3L16	3140-0098	3	1	INDUCTOR RF-CH-MLD 2.2UH +-10% .166D-INX	99800	1537-20
A4A3MP1	5960-0069	3	1	PLUG-HOLE CNCL-HD FOR .125-D-HOLE NYL	02768	207-080501-00-0101
A4A3MP2				NOT ASSIGNED		
A4A3MP3	5960-0069	3	1	PLUG-HOLE CNCL-HD FOR .125-D-HOLE NYL	02768	207-080501-00-0101
A4A3MP4	5960-0069	3	1	PLUG-HOLE CNCL-HD FOR .125-D-HOLE NYL	02768	207-080501-00-0101
A4A3Q1	1854-0345	8	1	TRANSISTOR NPN 2N5179 SI TO-72 PD=200MW	04713	2N5179
A4A3Q2	1853-0007	7	1	TRANSISTOR PNP 213251 SI TO-18 PD=360MW	04713	213251
A4A3Q3	1854-0019	3	1	TRANSISTOR NPN SI TO-18 PD=360MW	04713	
A4A3Q4	854-0019	3	1	TRANSISTOR NPN SI TO-18 PD=360MW	04713	
A4A3Q5	853-0007	7	1	TRANSISTOR PNP 2N3251 SI TO-18 PD=360MW	04713	2N3251
A4A3Q6	854-0019	3	1	TRANSISTOR NPN SI TO-18 PD=360MW	04713	
A4A3Q7	854-0019	3	1	TRANSISTOR NPN SI TO-18 PD=360MW	04713	
A4A3Q8	854-0019	3	1	TRANSISTOR NPN SI TO-18 PD=360MW	04713	
A4A3Q9	854-0019	3	1	TRANSISTOR NPN SI TO-18 PD=360MW	04713	
A4A3Q10	854-0019	3	1	TRANSISTOR NPN SI TO-18 PD=360MW	04713	

**Indicates factory-selected value*

HP Part Number 85662-60246

A4A3 Log Amplifier-Filter

Reference Designatio	HP Part Number	C D	Qty	Description	Mfr Code	Mfr Part Number
A4A3Q11	1854-0019		1	TRANSISTOR NPN SI TO-18 PD=360MW	0471:	
A4A3Q12	1854-0019		1	TRANSISTOR NPN SI TO-18 PD=360MW	0471:	
A4A3Q13	1854-0019		1	TRANSISTOR NPN SI TO-18 PD=360MW	0471:	
A4A3Q14	1854-0686		1	TRANSISTOR NPN SI TO-72 PD=200MW FT=4GH	2540:	
A4A3Q15	1853-0007		1	TRANSISTOR PNP 213251 SI TO-18 PD=360MW	0471:	2N3251
A4A3Q16	1854-0404		1	TRANSISTOR NPN SI TO-18 PD=360MW	0471:	
A4A3Q17	1854-0404		1	TRANSISTOR NPN SI TO-18 PD=360MW	0471:	
A4A3Q18	1854-0019		1	TRANSISTOR NPN SI TO-18 PD=360MW	0471:	
A4A3Q19	1853-0405		1	TRANSISTOR PNP SI PD=300MW FT=850MHZ	0471:	2N4209
A4A3R2	0757-0346		1	RESISTOR 10 +-1% .125W TF TC=0+-100	91637	CMF-55-1, T-1
A4A3R4	0757-0346		1	RESISTOR 10 +-1% .125W TF TC=0+-100	91637	CMF-55-1, T-1
A4A3R5	0757-0346		1	RESISTOR 10 +-1% .125W TF TC=0+-100	91637	CMF-55-1, T-1
A4A3R6	0757-0346		1	RESISTOR 10 +-1% .125W TF TC=0+-100	91637	CMF-55-1, T-1
A4A3R7	0757-0346		1	RESISTOR 10 +-1% .125W TF TC=0+-100	91637	CMF-55-1, T-1
A4A3R8	0757-0401	(	1	RESISTOR 100 +-1% .125W TF TC=0+-100	19701	SFR25H
A4A3R9	0757-0439	,	1	RESISTOR 6.81K +-1% .125W TF TC=0+-100	19701	SFR25H
A4A3R10	0698-3444		1	RESISTOR 316 1% .125W TF TC=0+-100	19701	SFR25H
A4A3R11	0698-3439	,	1	RESISTOR 178 1% .125W TF TC=0+-100	19701	SFR25H
A4A3R12	0698-3429	.	1	RESISTOR 19.6 1% .125W TF TC=0+-100	19701	SFR25H
A4A3R13	0757-0279	(	1	RESISTOR 3.16K +-1% .125W TF TC=0+-100	19701	SFR25H
A4A3R14	0757-0279	(	1	RESISTOR 3.16K +-1% .125W TF TC=0+-100	19701	SFR25H
A4A3R15*	0757-0294	(	1	RESISTOR 17.8 1% .125W TF TC=0+-100	19701	SFR25H
A4A3R16	0698-0083	8	1	RESISTOR 1.96K 1% .125W TF TC=0+-100	19701	SFR25H
A4A3R17	0698-0085	(	1	RESISTOR 2.61K 1% .125W TF TC=0+-100	19701	SFR25H
A4A3R19	0757-0439	4	1	RESISTOR 6.81K +-1% .125W TF TC=0+-100	19701	SFR25H
A4A3R20	0698-3444	1	1	RESISTOR 316 1% .125W TF TC=0+-100	19701	SFR25H
A4A3R21	3698-3429	2	1	RESISTOR 19.6 1% .125W TF TC=0+-100	19701	SFR25H
A4A3R22	3698-3439	4	1	RESISTOR 178 1% .125W TF TC=0+-100	19701	SFR25H
A4A3R23	3757-0274	F	1	RESISTOR 1.21K +-1% .125W TF TC=0+-100	19701	SFR25H
A4A3R24	0757-0279	D	1	LESISTOR 3.16K +-1% .125W TF TC=0+-100	19701	SFR25H
A4A3R25*	1698-3433	3	1	LESISTOR 28.7 1% .125W		
A4A3R26	0698-0085	3	1	ESISTOR 2.61K 1% .125W TF TC=0+-100	19701	SFR25H
A4A3R27	0698-0083	3	1	ESISTOR 1.96K 1% .125W TF TC=0+-100	19701	SFR25H
A4A3R29*	1698-3440	7	1	ESISTOR 196 1% .125W TF TC=0+-100	19701	SFR25H
A4A3R30	0698-3444	L	1	ESISTOR 316 1% .125W TF TC=0+-100	19701	SFR25H
A4A3R31	0698-3444	L	1	ESISTOR 316 1% .125W TF TC=0+-100	19701	SFR25H
A4A3R32	0757-0439	I	1	ESISTOR 6.81K +-1% .125W TF TC=0+-100	19701	SFR25H
A4A3R33	0757-0279	)	1	ESISTOR 3.16K +-1% .125W TF TC=0+-100	19701	SFR25H
A4A3R34	0757-0279	)	1	ESISTOR 3.16K +-1% .125W TF TC=0+-100	19701	SFR25H
A4A3R35*	0757-0180	,	1	ESISTOR 31.6 +-1% .125W TF TC=0+-100	19701	SFR25H
A4A3R36	0757-0440	/	1	RESISTOR 7.5K +-1% .125W TF TC=0+-100	19701	SFR25H
A4A3R37	0757-0440	7	1	RESISTOR 7.5K +-1% .125W TF TC=0+-100	19701	SFR25H
A4A3R38*	0698-3443	C	1	RESISTOR 287 1% .125W TF TC=0+-100	19701	SFR25H
A4A3R39	0698-3446	3	1	RESISTOR 383 1% .125W TF TC=0+-100	19701	SFR25H
A4A3R40	3698-3444	1	1	RESISTOR 316 1% .125W TF TC=0+-100	19701	SFR25H
A4A3R41	3757-0439	4	1	RESISTOR 6.81K +-1% .125W TF TC=0+-100	19701	SFR25H
A4A3R42	0757-0279	D	1	RESISTOR 3.16K +-1% .125W TF TC=0+-100	19701	SFR25H
A4A3R43	0757-0279	^	1	LESISTOR 3.16K +-1% .125W TF TC=0+-100	19701	SFR25H

**Indicates factory-selected value*

HP Part Number 85662160246

A4A3 Log Amplifier-Filter

Reference Designation	HP Part Number	CD	Qty	Description	Mfr Code	Mfr Part Number
A4A3R44	0757-0447		1	RESISTOR 16.2K +-1% .125W TF TC=0+-100	19701	SFR25H
A4A3R45	0757-0447		1	RESISTOR 16.2K +-1% .125W TF TC=0+-100	19701	SFR25H
A4A3R47*	0757-0279		1	RESISTOR 3.16K +-1% .125W TF TC=0+-100	19701	SFR25H
A4A3R48	0698-3444		1	RESISTOR 316 1% .125W TF TC=0+-100	19701	SFR25H
A4A3R49	0757-0439		1	RESISTOR 6.81K +-1% .125W TF TC=0+-100	19701	SFR25H
A4A3R50	0757-0279		1	RESISTOR 3.16K +-1% .125W TF TC=0+-100	19701	SFR25H
A4A3R51	0757-0279		1	RESISTOR 3.16K +-1% .125W TF TC=0+-100	19701	SFR25H
A4A3R52	0757-0447		1	RESISTOR 16.2K +-1% .125W TF TC=0+-100	19701	SFR25H
A4A3R53	0757-0447		1	RESISTOR 16.2K +-1% .125W TF TC=0+-100	19701	SFR25H
A4A3R54*	0757-0399		1	RESISTOR 82.5 +-1% .125W TF TC=D+-100	19701	SFR25H
A4A3R57	0757-0442		1	RESISTOR 10K +-1% .125W TF TC=0+-100	19701	SFR25H
A4A3R59	0757-0439		1	RESISTOR 6.81K +-1% .125W TF TC=0+-100	19701	SFR25H
A4A3R60	0698-0084		1	RESISTOR 2.15K 1% .125W TF TC=0+-100	19701	SFR25H
A4A3R61	0698-0082		1	RESISTOR 464 1% .125W TF TC=0+-100	19701	SFR25H
A4A3R62	0757-0274		1	RESISTOR 1.21K +-1% .125W TF TC=0+-100	19701	SFR25H
A4A3R63	0757-0439		1	RESISTOR 6.81K +-1% .125W TF TC=0+-100	19701	SFR25H
A4A3R64	0698-3439		1	RESISTOR 178 1% .125W TF TC=0+-100	19701	SFR25H
A4A3R65	0757-0274		1	RESISTOR 1.21K +-1% .125W TF TC=0+-100	19701	SFR25H
A4A3R66*	0757-0466		1	RESISTOR 110K +-1% .125W TF TC=0+-100	19701	SFR25H
A4A3R67	2100-3054		1	RESISTOR-TRMR 50K 10% TKF SIDE-ADJ 17-TR	73138	89PR50K
A4A3R68	0698-0082		1	RESISTOR 464 1% .125W TF TC=0+-100	19701	SFR25H
A4A3R69	0698-3444		1	RESISTOR 316 1% .125W TF TC=0+-100	19701	SFR25H
A4A3R70	0757-0416		1	RESISTOR 511 +-1% .125W TF TC=0+-100	19701	SFR25H
A4A3R71	0757-0394		1	RESISTOR 51.1 +-1% .125W TF TC=0+-100	19701	SFR25H
A4A3R72	0757-0280		1	RESISTOR 1K +-1% .125W TF TC=0+-100	19701	SFR25H
A4A3R73	0757-0418		1	RESISTOR 619 +-1% .125W TF TC=0+-100	19701	SFR25H
A4A3R74*	0757-0279		1	RESISTOR 3.16K +-1% .125W TF TC=D+-100	19701	SFR25H
A4A3R76	0757-0442		1	RESISTOR 10K +-1% .125W TF TC=0+-100	19701	SFR25H
A4A3R77	0757-0442		1	RESISTOR 10K +-1% .125W TF TC=0+-100	19701	SFR25H
A4A3R78	0757-0442		1	RESISTOR 10K +-1% .125W TF TC=0+-100	19701	SFR25H
A4A3R79*	0757-0458		1	RESISTOR 51.1K +-1% .125W TF TC=0+-100	19701	SFR25H
A4A3R80*	0698-0083		1	RESISTOR 1.96K 1% .125W TF TC=0+-100	19701	SFR25H
A4A3R81*	0757-0447		1	RESISTOR 16.2K +-1% .125W TF TC=0+-100	19701	SFR25H
A4A3R82	0757-0279		1	RESISTOR 3.16K +-1% .125W TF TC=0+-100	19701	SFR25H
A4A3R83	2100-3161		1	RESISTOR-TRMR 20K 10% TKF SIDE-ADJ 17-TR	73138	89PR20K
A4A3R84	1757-0279		1	RESISTOR 3.16K +-1% .125W TF TC=0+-100	19701	SFR25H
A4A3R85	1757-0442		1	RESISTOR 10K +-1% .125W TF TC=0+-100	19701	SFR25H
A4A3R87	0757-0346		1	RESISTOR 10 +-1% .125W TF TC=0+-100	91637	CMF-55-1, T-1
A4A3R88	0698-3160		1	RESISTOR 31.6K 1% .125W TF TC=0+-100	19701	SFR25H
A4A3R89	0757-0280		1	RESISTOR 1K +-1% .125W TF TC=0+-100	19701	SFR25H
A4A3R90	0757-0465		1	RESISTOR 100K +-1% .125W TF TC=0+-100	19701	SFR25H
A4A3R92	1757-0442		1	RESISTOR 10K +-1% .125W TF TC=0+-100	19701	SFR25H
A4A3R93	0757-0280		1	RESISTOR 1K +-1% .125W TF TC=0+-100	19701	SFR25H
A4A3TP1	251-0600		1	CONNECTOR-SGL CONT PIN 1.14-MM-BSC-SZ SQ	27264	16-06-0034
A4A3TP2	251-0600		1	CONNECTOR-SGL CONT PIN 1.14-MM-BSC-SZ SQ	27264	16-06-0034
A4A3TP3	251-0600		1	CONNECTOR-SGL CONT PIN 1.14-MM-BSC-SZ SQ	27264	16-06-0034
A4A3TP4	251-0600		1	CONNECTOR-SGL CONT PIN 1.14-MM-BSC-SZ SQ	27264	16-06-0034

**Indicates factory-selected value*

HP Part Number 85662-60246

A4A3 Log Amplifier-Filter

Reference Designation	HP Part Number	C. D	Qty	Description	Mfr Code	Mfr Part Number
A4A3TP5	1251-0600	(	1	CONNECTOR-SGL CONT PIN 1.14-MM-BSC-SZ SQ	27264	16-06-0034
A4A3TP6	1251-0600	(	1	CONNECTOR-SGL CONT PIN 1.14-MM-BSC-SZ SQ	27264	16-06-0034
A4A3TP7	1251-0600	(	1	CONNECTOR-SGL CONT PIN 1.14-MM-BSC-SZ SQ	27264	16-06-0034
A4A3TP8	1251-0600	(	1	CONNECTOR-SGL CONT PIN 1.14-MM-BSC-SZ SQ	27264	16-06-0034
A4A3TP9	1251-0600	(	1	CONNECTOR-SGL CONT PIN 1.14-MM-BSC-SZ SQ	27264	16-06-0034
A4A3TP10	1251-0600	(	1	CONNECTOR-SGL CONT PIN 1.14-MM-BSC-SZ SQ	27264	16-06-0034
A4A3TP11	1251-0600	(	1	CONNECTOR-SGL CONT PIN 1.14-MM-BSC-SZ SQ	27264	16-06-0034
A4A3TP12	0360-0124	3	1	CONNECTOR-SGL CONT PIN .04-IN-BSC-SZ RND	97300	
A4A3U1	1826-1058	3	1	IC OP AMP GP 8-TO-99 PKG	06665	DP-02CJ
A4A3VR1	1902-0126	8	1	DIODE-ZNR 2.61V 5% DO-7 PD=.4W TC=-.072%	04719	
A4A3VR2	1902-0579	3	1	DIODE-ZNR 5.1V 5% PD=1W IR=10UA	04713	
A4A3VR3	1902-0041	4	1	DIODE-ZNR 5.11V 5% DO-35 PD=.4W	04713	

Analyzer Repair Inc.

**Indicates factoryselected value*

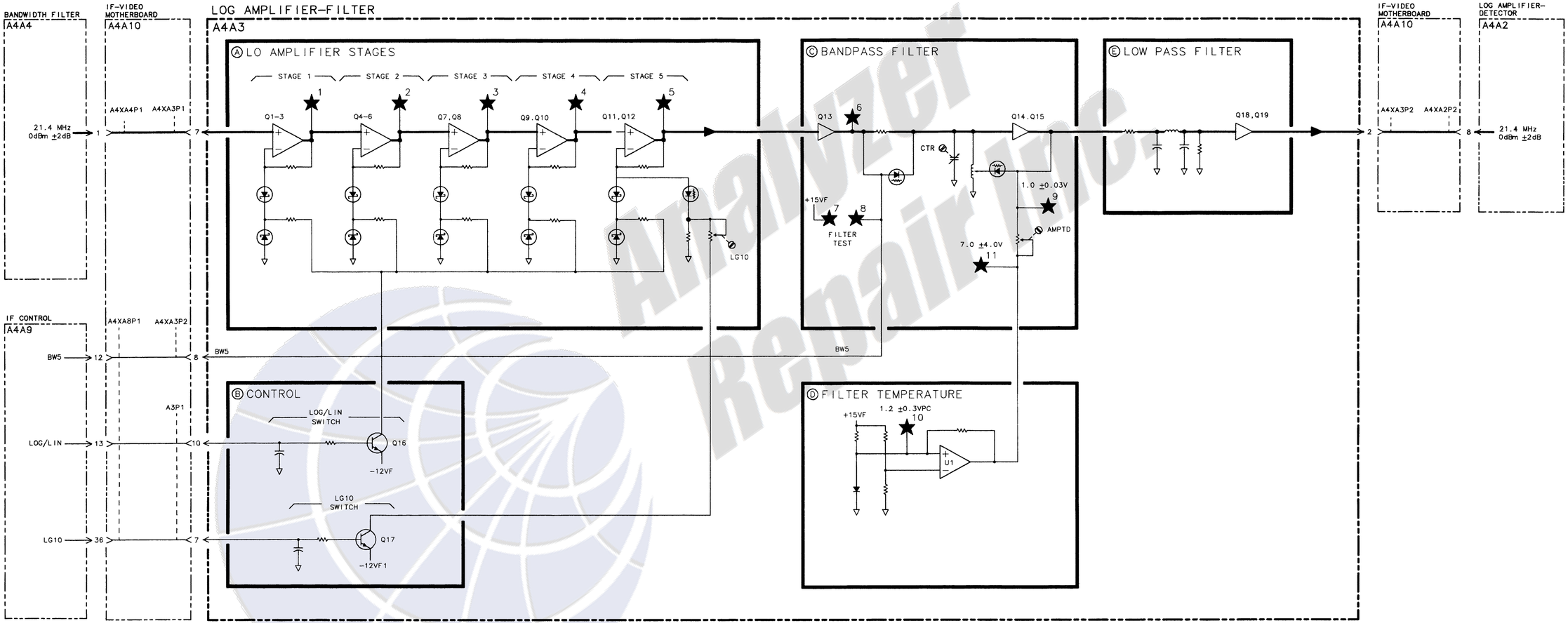

A4A3 LOG AMPLIFIER-FILTER, BLOCK DIAGRAM

Analyzer Repair Inc.

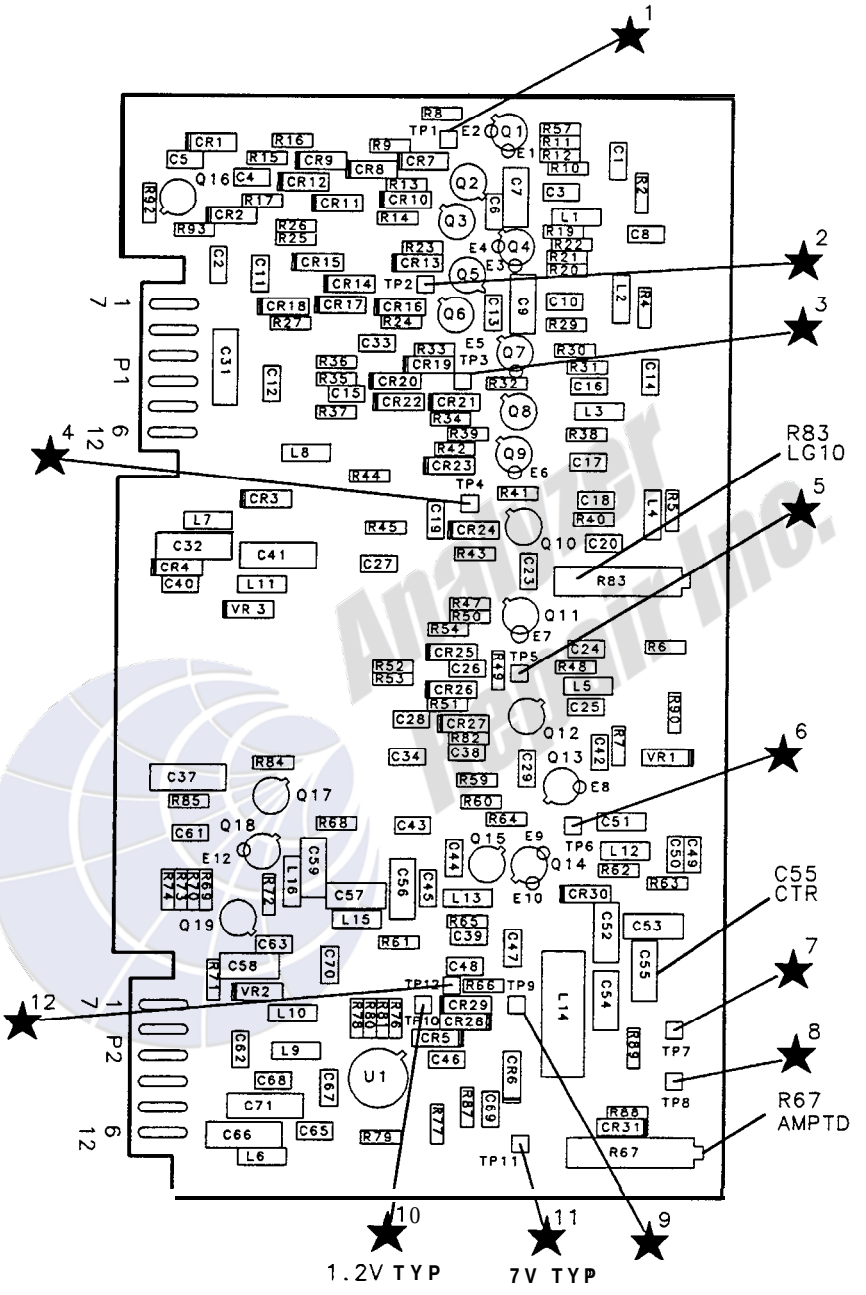

A4A3 Log Amplifier-Filter Component Locations, 85662-60009

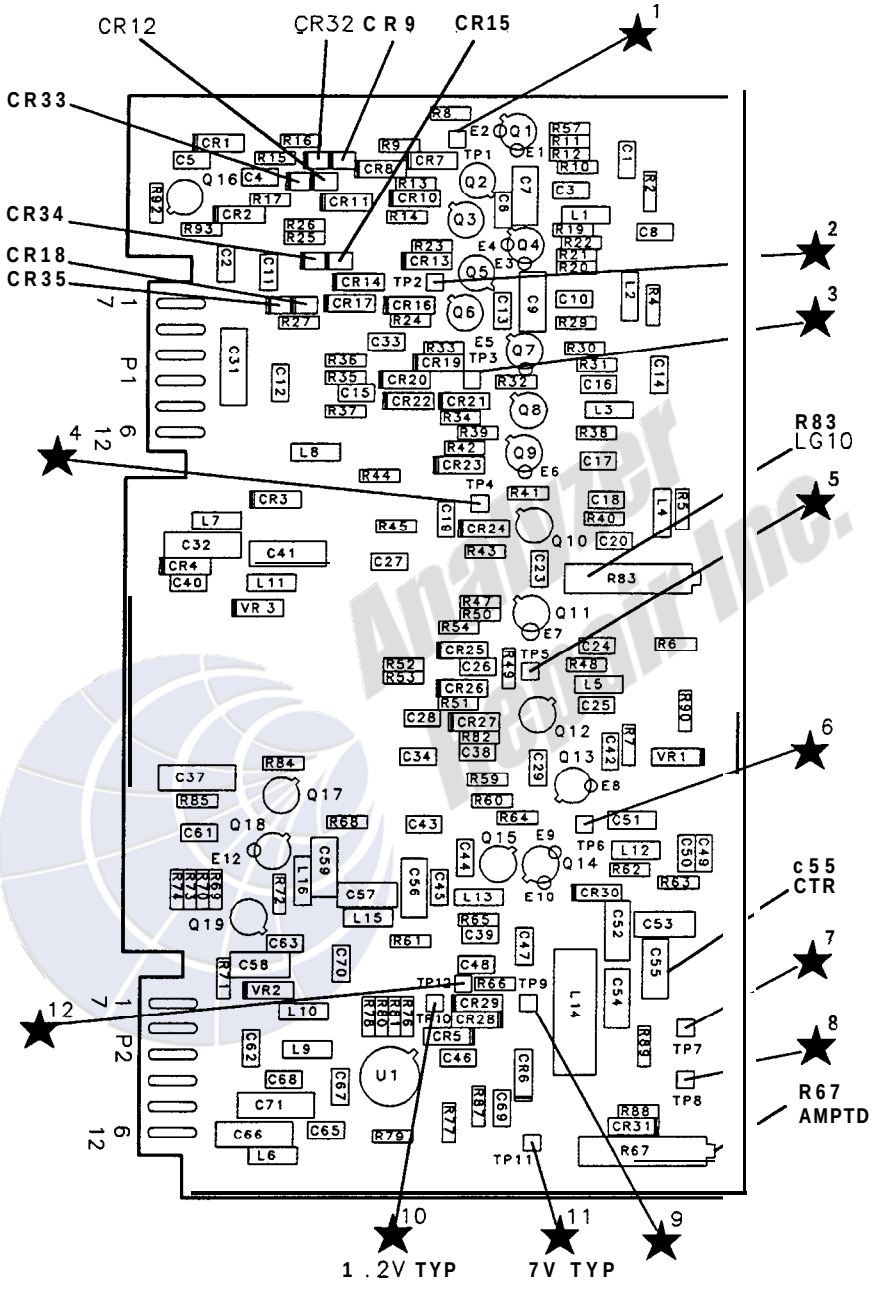

A4A3 Log Amplifier-Filter Component Locations, 85662-60246

A4A3 LOG AMPLIFIER-FILTER
85662-60009
(SERIAL PREFIXES: 2403A-3001A)

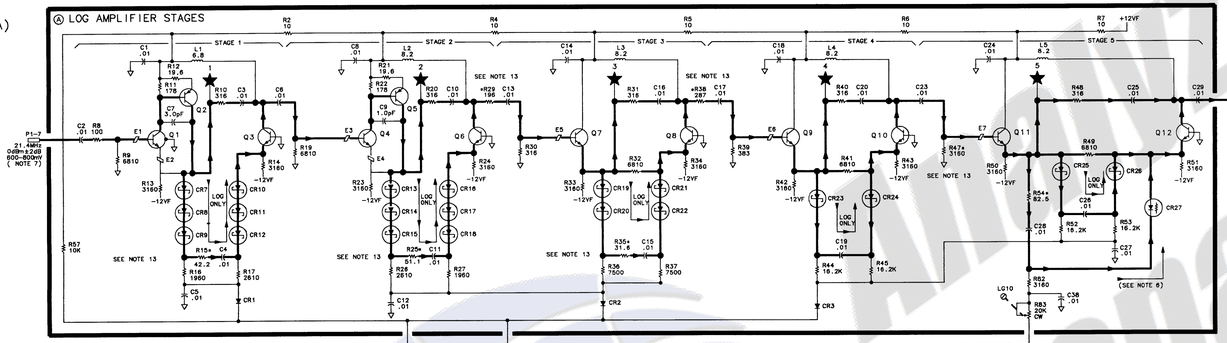

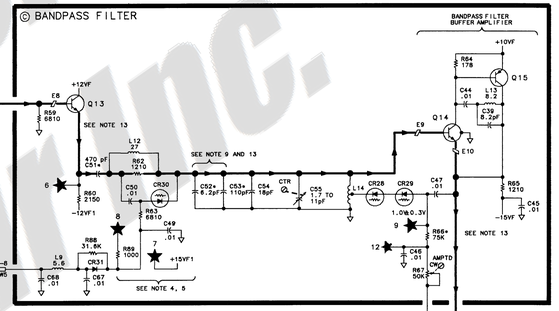

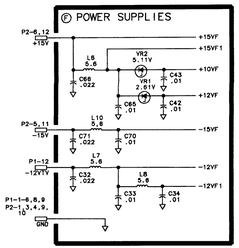

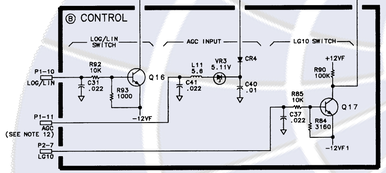

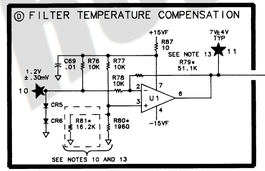

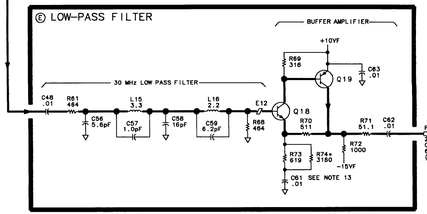

P1

PIN	SIGNAL	TO/FROM	FUNCTION BLOCK
1	GND		F
7	21.4MHz	A4A4P1-1	A
2	GND		F
8	GND		F
3	GND		F
9	GND		F
4	GND		F
10	LOG/LIN	A4A5P1-13	B
5	GND		F
11	AGC	A4A2P1-10	B
6	GND		F
12	-12VTV	A4A2P1-12	F

P2

PIN	SIGNAL	TO/FROM	FUNCTION BLOCK
1	GND		F
7	LG10	A4A5P1-36	B
2	21.4MHz	A4A2P2-8	E
8	BW5	A4A5P1-12	C
3	GND		F
9	GND		F
4	GND		F
10	GND		F
5	-15V		F
11	-15V		F
6	+15V		F
12	+15V		F

NOTES:

1. REFERENCE DESIGNATORS WITHIN THIS ASSEMBLY ARE ABBREVIATED. FOR COMPLETE REFERENCE DESIGNATION, PREFIX ABBREVIATION WITH ASSEMBLY DESIGNATION.
2. UNLESS OTHERWISE INDICATED: RESISTANCE IS IN OHMS (Ω) CAPACITANCE IS IN MICROFARADS(μF) INDUCTANCE IS IN MICROHENRIES(μH)
3. UNLESS OTHERWISE INDICATED: SIGNALS ENTER AT LEFT SIDE AND EXIT AT RIGHT SIDE OF FUNCTION BLOCKS.
4. BANDPASS FILTER WIDE/NARROW CONDITIONS:

BW5	RESOLUTION BW	FILTER BANDWIDTH	CR30 BIAS
HI (+14.8V TYP)	100kHz TO 3MHz	WIDE (APPROX. 20MHz)	FORWARD
LO (-15V TYP)	10Hz TO 30kHz	NARROW (APPROX. 1MHz)	REVERSE

5. FOR ADJUSTMENT OF BANDPASS FILTER, TP8 IS SHORTED TO TP7 WHICH FORWARD BIASES CR30 TO PLACE FILTER IN "WIDE" MODE (APPROX. 20MHz).
6. LG 10 OPERATION: CONTROL SETTINGS: (INSTR PRESET)
   ATTENUATOR 0dB
   SCALE/DIV 10dB
   RESOLUTION BANDWIDTH 3kHz

REFERENCE LEVEL	LG10	CR27 BIAS
50 μV	HI (-3V TO +1V)	FORWARD
50 mV	LO (-14V TO -10V)	REVERSE

7. LOG AMPLIFIER STAGE GAIN CHECK: CONTROL SETTINGS: (INSTR PRESET)
   CENTER FREQUENCY.....CAL. OUT FREQ.
   FREQUENCY SPAN.....0Hz
   RES BW.....100kHz
   REFERENCE LEVEL.....0dBm
   RESOLUTION BW.....3kHz
   CONNECT HP355D ATTENUATOR BETWEEN CAL OUTPUT AND SIGNAL INPUT 2 CONNECTOR

20MHz ATTENUATED BY	CALIBRATOR TEST POINT	LEVELS ±25%
0dB	P1-7	700mV P-P
0dB	1	700mV P-P
10dB	2	700mV P-P
20dB	3	280mV P-P
30dB	4	100mV P-P
30dB	5	330mV P-P
30dB	P2-2	700mV P-P

8. MNEMONIC TABLE:

MNEMONIC	DESCRIPTION
LG10	LINEAR GAIN STEP (10dB)
LOG/LIN	LOG-LINEAR CONTROL
AGC	AUTOMATIC GAIN CONTROL VOLTAGE INPUT
BW5	BANDWIDTH CONTROL LINE 5

9. C52+ AND C53+ ARE FACTORY-SELECTED TO ADJUST FILTER CENTER FREQENCY.
10. R81+ IS FACTORY-SELECTED FOR TEMPERATURE COMPENSATION AND MAY NOT BE PRESENT.
11. LOG/LIN CONTROL LEVELS:

	LOG/LIN
LOG	5V TO 10V
LIN	-15V TO -14V

12. REFER TO NOTE 9 ON A4A2 LOG AMPLIFIER DETECTOR SCHEMATIC.
13. C51+, C52+, C53+, R15+, R25+, R29+, R35+, R38+, R47+, R54+, R66+, R74+, R78+, R80+, R81+ ARE FACTORY-SELECTED COMPONENTS. ACCEPTABLE VALUE RANGES ARE LISTED BELOW.

COMPONENT	RANGE
C51+	390pF - 680pF
C52+	OPEN OR 5.6pF - 15.0pF
C53+	91pF - 130pF
R15+	10Ω - 82.5Ω
R25+	10Ω - 82.5Ω
R29+	10.0Ω - 82.5Ω
R35+	10.0Ω - 61.9Ω
R38+	81.8Ω - 196Ω
R47+	2.15KΩ - 13.3KΩ
R54+	51.1Ω - 133Ω
R66+	48.4KΩ - 215KΩ
R74+	1.78KΩ - 13.3KΩ
R78+	8.25KΩ - 82.5KΩ
R80+	100Ω - 681Ω
R81+	1000Ω - OPEN

A4A3

A4A3 LOG AMPLIFIER-FILTER, SCHEMATIC DIAGRAM

A4A3 LOG AMPLIFIER-FILTER
85662-60246
(SERIAL PREFIX: 3001A)

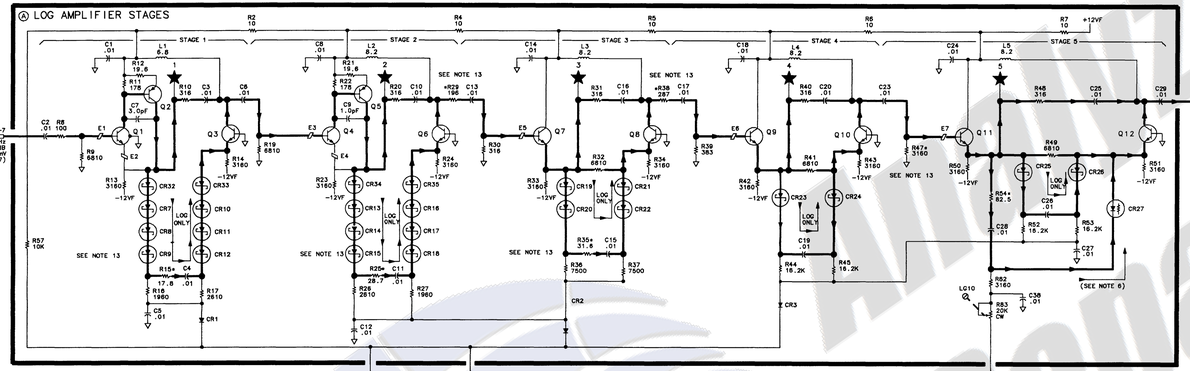

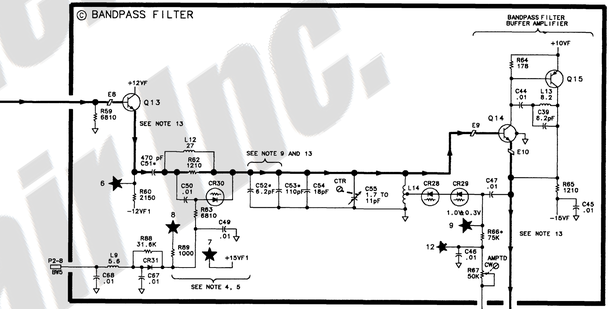

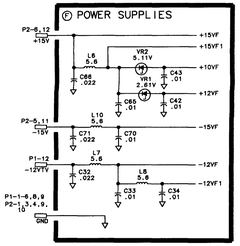

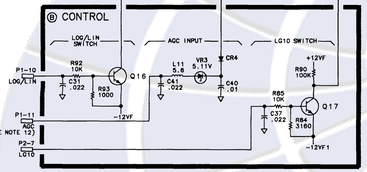

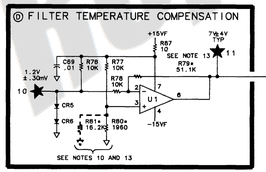

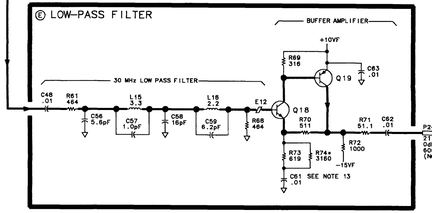

P1

PIN	SIGNAL	TO/FROM	FUNCTION BLOCK
1	GND		F
7	21.4MHz	A4A4P1-1	A
2	GND		F
8	GND		F
3	GND		F
9	GND		F
4	GND		F
10	LOG/LIN	A4A5P1-13	B
5	GND		F
11	AGC	A4A2P1-10	B
6	GND		F
12	-12VTV	A4A2P1-12	F

P2

PIN	SIGNAL	TO/FROM	FUNCTION BLOCK
1	GND		F
7	LG10	A4A5P1-36	B
2	21.4MHz	A4A2P2-8	E
8	BWS	A4A5P1-12	C
3	GND		F
9	GND		F
4	GND		F
10	GND		F
5	-15V		F
11	-15V		F
6	+15V		F
12	+15V		F

NOTES:

1. REFERENCE DESIGNATORS WITHIN THIS ASSEMBLY ARE ABBREVIATED. FOR COMPLETE REFERENCE DESIGNATION, PREFIX ABBREVIATION WITH ASSEMBLY DESIGNATION.
2. UNLESS OTHERWISE INDICATED: RESISTANCE IS IN OHMS (Ω) CAPACITANCE IS IN MICROFARADS (μF) INDUCTANCE IS IN MICROHENRIES (μH)
3. UNLESS OTHERWISE INDICATED: SIGNALS ENTER AT LEFT SIDE AND EXIT AT RIGHT SIDE OF FUNCTION BLOCKS.
4. BANDPASS FILTER WIDE/NARROW CONDITIONS:

BWS	RESOLUTION BW	FILTER BANDWIDTH	CR30 BIAS
+14.8V (+10V)	100kHz TO 3MHz	WIDE (APPROX. 20MHz)	FORWARD
0V (+10V)	10Hz TO 30kHz	NARROW (APPROX. 4MHz)	REVERSE

5. FOR ADJUSTMENT OF BANDPASS FILTER, TP8 IS SHORTED TO TP7 WHICH FORWARD BIASES CR30 AND PLACES FILTER IN WIDE MODE (APPROX. 20MHz).
6. LG 10 OPERATION: CONTROL SETTINGS: (INSTR PRESET) ATTENUATION 0dB LG10 RESOLUTION BANDWIDTH 3kHz

REFERENCE LEVEL	LG10	CR27 BIAS
20 mV	HI (-3V TO +1V)	FORWARD
50 mV	LO (-14V TO -10V)	REVERSE

7. LOG AMPLIFIER-STAGE GAIN CHECK: CONNECT HP3500 SWEEP OSCILLATOR: CENTER FREQUENCY.....CAL. OUT FREQ. FREQUENCY SPAN.....0Hz RES BW.....100kHz VERTICAL LEVEL.....0dBm ATTENUATION.....0dB CONNECT HP3500 ATTENUATOR BETWEEN CAL. OUTPUT AND SIGNAL INPUT 2 CONNECTOR

20MHz CALIBRATOR ATTENUATED BY	TEST POINT	LEVELS ±25%
0dB	P1-7	700mV P-P
0dB	1	700mV P-P
10dB	2	70mV P-P
20dB	3	28mV P-P
30dB	4	10mV P-P
30dB	5	330mV P-P
30dB	P2-2	700mV P-P

8. MNEMONIC TABLE:

MNEMONIC	DESCRIPTION
LG10	LINEAR GAIN STEP (10dB)
LOG/LIN	LOG-LINEAR CONTROL
AGC	AUTOMATIC GAIN CONTROL VOLTAGE INPUT
BWS	BANDWIDTH CONTROL LINE 5

9. C52+ AND C53+ ARE FACTORY-SELECTED TO ADJUST FILTER CENTER FREQUENCY.
10. RB1+ IS FACTORY-SELECTED FOR TEMPERATURE COMPENSATION AND MAY NOT BE PRESENT.
11. LOG/LIN CONTROL LEVELS:

	LOG/LIN
LOG	5V TO 10V
LIN	10V TO +14V

12. REFER TO NOTE 9 ON A4A2 LOG AMPLIFIER DETECTOR SCHEMATIC.
13. C51+, C52+, C53+, R15+, R25+, R29+, R35+, R38+, R47+, R64+, R66+, R74+, R79+, R80+, R81+ ARE FACTORY-SELECTED COMPONENTS. ACCEPTABLE VALUE RANGES ARE LISTED BELOW.

COMPONENT	RANGE
C51+	360pF – 680pF
C52+	OPEN OR 5.6pF – 15.0pF
C53+	91pF – 130pF
R15+	19.0Ω – 82.5Ω
R25+	19.0Ω – 82.5Ω
R29+	51.1Ω – 1000Ω
R35+	10.0Ω – 61.9Ω
R38+	61.9Ω – 1960Ω
R47+	2.15KΩ – 13.3KΩ
R54+	51.1Ω – 133Ω
R66+	46.4KΩ – 215KΩ
R74+	1.78KΩ – 13.3KΩ
R79+	8.25KΩ – 82.5KΩ
R80+	1000Ω – 6810Ω
R81+	1000Ω – OPEN

A4A3

A4A3 LOG AMPLIFIER-FILTER, SCHEMATIC DIAGRAM

A4A4

A4A4 Bandwidth Filter, Circuit Description

A4A4 Bandwidth Filter determines the bandwidth of the 21.4 MHz IF in conjunction with A4A8 Attenuator-Bandwidth Filter. A4A4 is very similar to A4A8 except that it does not have a switchable gain input amplifier, and it has an extra stage of crystal filtering. Only the 10 dB Gain Input Buffer Amplifier will be described here. For descriptions of the other circuits in A4A4, refer to descriptions of the corresponding circuits in A4A8.

Input Buffer Amplifier Ⓐ

The 10 dB Input Buffer Amplifier (Figure 1) functions as a noninverting op amp.

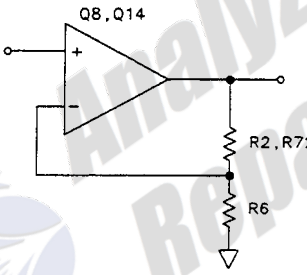

Figure 1. A4A4 Input Buffer Amplifier, Equivalent Circuit

In the crystal mode (30 kHz, 10 kHz, and 3 kHz bandwidths), the amplifier includes Q7. The biasing of the amplifier is independent of its RF (21.4 MHz) operation but is very critical for its proper functioning. If a malfunction occurs, the dc bias should be checked first.

The current through Q14 is determined by the difference between two current sources, one involving Q7 and the other involving Q8. (See Figure 2.) The most convenient way to find the current from each source is to measure the voltage across each emitter resistor (A 1 kΩ resistor should be used in series with the voltmeter probe tip to prevent the circuit from oscillating and giving an erroneous reading). For Q7, the current through R90 must be included. If results are inconsistent, the emitter resistor should be checked also. Check to see that the BW5 line is at the voltage specified on the schematic.

In the LC mode (the four wider bandwidths), the BW5 line goes to approximately +14.8 V and turns off the current source Q7. The current supplied by Q7 in the crystal mode is now supplied through CR1 and R12 from the BW5 line. In the LC mode, the current through Q14 can be found by subtracting the current through R12 from the current through R4.

Analyzer Repair Inc.

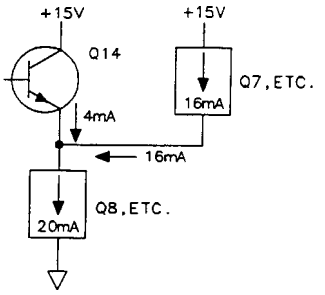

Figure 2. A4A4 Input Buffer Amplifier, Current Sinks

Analyzer Repair Inc.

HP Part Number 85662-60142

A4A4 Bandwidth Filter

Reference Designation	HP Part Number	CD	Qty	Description	Mfr Code	Mfr Part Number
A4A4	85662-60142	1	1	BOARD ASSEMBLY. BANDWIDTH FILTER (SERIAL PREFIXES: 2403A-2648A)	28480	85662-60142
A4A4C1	0160-4832	4	1	CAPACITOR-FXD .01UF +-10% 100VDC CER	04222	SA101C103KAAH
A4A4C2	0160-4832	4	1	CAPACITOR-FXD .01UF +-10% 100VDC CER	04222	SA101C103KAAH
A4A4C3	0160-2254	0	1	CAP-FXD 7.5pF 500 V	52763	
A4A4C4	0160-4832	4	1	CAPACITOR-FXD .01UF +-10% 100VDC CER	04222	SA101C103KAAH
A4A4C5	0160-4832	4	1	CAPACITOR-FXD .01UF +-10% 100VDC CER	04222	SA101C103KAAH
A4A4C6	0160-4833	5	1	CAPACITOR-FXD .022UF +-10% 100VDC CER	04222	SA201C223KAAH
A4A4C7	0160-4832	4	1	CAPACITOR-FXD .01UF +-10% 100VDC CER	04222	SA101C103KAAH
A4A4C8	0160-2257	3	1	CAPACITOR-FXD 10PF +-5% 500VDC CER 0+-60	52763	2RDPLX0501RNP0
A4A4C9	0121-0059	7	1	CAPACITOR-V TRMR-CER 2-8PF 350V PC-MTG	52763	304-324-139
A4A4C10*	0160-2249	3	1	CAPACITOR-FXD 4.7PF +-.25PF 500VOC CER	52763	2RDPLX0504R7NP0
A4A4C11	0160-4832	4	1	CAPACITOR-FXD .01UF +-10% 100VDC CER	04222	SA101C103KAAH
A4A4C13	0160-4832	4	1	CAPACITOR-FXD .01UF +-10% 100VDC CER	04222	SA101C103KAAH
A4A4C14	0160-4832	4	1	CAPACITOR-FXD .01UF +-10% 100VDC CER	04222	SA101C103KAAH
A4A4C15	0160-4574	1	1	CAPACITOR-FXD 1000PF +-10% 100VDC CER	04222	SA101C102KAAH
A4A4C16	0160-0437	7	1	CAP-FXD 12pF 500 V		301-000-P3K0-120J
A4A4C17*	0160-0134	1	1	CAPACITOR-FXD 220PF +-5% 300VDC MICA 0+7	09023	CD15FD221J03
A4A4C18	0160-4832	4	1	CAPACITOR-FXD .01UF +-10% 100VDC CER	04222	SA101C103KAAH
A4A4C19	0121-0036	0	1	CAPACITOR-V TRMR-CER 5.5-18PF 350V PC-MT	52763	304-324-237
A4A4C20	0121-0446	6	1	CAP-VAR 4.5pF 2pF 160 V	52763	302-450-502
A4A4C21	0160-4832	4	1	CAPACITOR-FXD .01UF +-10% 100VDC CER	04222	SA101C103KAAH
A4A4C22	0160-4832	4	1	CAPACITOR-FXD .01UF +-10% 100VDC CER	04222	SA101C103KAAH
A4A4C23	0160-4832	4	1	CAPACITOR-FXD .01UF +-10% 100VDC CER	04222	SA101C103KAAH
A4A4C24	0160-4832	4	1	CAPACITOR-FXD .01UF +-10% 100VDC CER	04222	SA101C103KAAH
A4A4C25	0160-4832	4	1	CAPACITOR-FXD .01UF +-10% 100VDC CER	04222	SA101C103KAAH
A4A4C26	0160-4832	4	1	CAPACITOR-FXD .01UF +-10% 100VDC CER	04222	SA101C103KAAH
A4A4C27	0160-4832	4	1	CAPACITOR-FXD .01UF +-10% 100VDC CER	04222	SA101C103KAAH
A4A4C28	0140-0194	1	1	CAPACITOR-FXD 110PF +-5% 300VDC MICA	09023	CD15FD111J03
A4A4C29	0160-4832	4	1	CAPACITOR-FXD .01UF +-10% 100VDC CER	04222	SA101C103KAAH
A4A4C30	0160-4832	4	1	CAPACITOR-FXD .01UF +-10% 100VDC CER	04222	SA101C103KAAH
A4A4C31	0160-2207	3	1	CAP-FXD 300pF 300 V MICA	09023	CD15FD301J03
A4A4C32	0160-4832	4	1	CAPACITOR-FXD .01UF +-10% 100VDC CER	04222	SA101C103KAAH
A4A4C33	0160-4833	5	1	CAPACITOR-FXD .022UF +-10% 100VDC CER	04222	SA201C223KAAH
A4A4C34	0160-4832	4	1	CAPACITOR-FXD .01UF +-10% 100VDC CER	04222	SA101C103KAAH
A4A4C35	0160-4832	4	1	CAPACITOR-FXD .01UF +-10% 100VDC CER	04222	SA101C103KAAH
A4A4C36	0160-4832	4	1	CAPACITOR-FXD .01UF +-10% 100VDC CER	04222	SA101C103KAAH
A4A4C37	0160-2257	3	1	CAPACITOR-FXD 10PF +-5% 500VDC CER 0+-60	52763	2RDPLX0501RNP0
A4A4C38*	0160-2249	3	1	CAPACITOR-FXD 4.7PF +-.25PF 500VDC CER	52763	2RDPLX0504R7NP0
A4A4C39	0121-0059	7	1	CAPACITOR-V TRMR-CER 2-8PF 350V PC-MTG	52763	304-324-139
A4A4C40	0160-4832	4	1	CAPACITOR-FXD .01UF +-10% 100VDC CER	04222	SA101C103KAAH
A4A4C41	0121-0452	4	1	CAPACITOR-V TRMR-AIR 1.3-5.4PF 175V PC-M	74970	187-0103-028
A4A4C43	0121-0452	4	1	CAPACITOR-V TRMR-AIR 1.3-5.4PF 175V PC-M	74970	187-0103-028
A4A4C46	0160-4835	7	1	CAPACITOR-FXD .1UF +-10% 50VDC CER	04222	SA115C104KAAH
A4A4C47	0160-4832	4	1	CAPACITOR-FXD .01UF +-10% 100VDC CER	04222	SA101C103KAAH
A4A4C48	0160-4832	4	1	CAPACITOR-FXD .01UF +-10% 100VDC CER	04222	SA101C103KAAH
A4A4C49	0160-4832	4	1	CAPACITOR-FXD .01UF +-10% 100VDC CER	04222	SA101C103KAAH

**Indicates factory-selected value*

HP Part Number 85662-60142

A4A4 Bandwidth Filter

Reference Designation	HP Part Number	C. D	Qty	Description	Mfr Code	Mfr Part Number
A4A4C50	0160-4832	4	1	CAPACITOR-FXD .01UF +-10% 100VDC CER	04222	SA101C103KAAH
A4A4C52	0160-4832	4	1	CAPACITOR-FXD .01UF +-10% 100VDC CER	04222	SA101C103KAAH
A4A4C53	0160-4832	4	1	CAPACITOR-FXD .01UF +-10% 100VDC CER	04222	SA101C103KAAH
A4A4C54	0160-4832	4	1	CAPACITOR-FXD .01UF +-10% 100VDC CER	04222	SA101C103KAAH
A4A4C55	0160-4833	5	1	CAPACITOR-FXD .022UF +-10% 100VDC CER	04222	SA201C223KAAH
A4A4C56	0160-4832	4	1	CAPACITOR-FXD .01UF +-10% 100VDC CER	04222	SA101C103KAAH
A4A4C57	0160-2207	3	1	CAP-FXD 300pF 300 V MICA	09023	CD15FD301J03
A4A4C58	0160-4832	4	1	CAPACITOR-FXD .01UF +-10% 100VDC CER	04222	SA101C103KAAH
A4A4C59	0160-4832	4	1	CAPACITOR-FXD .01UF +-10% 100VDC CER	04222	SA101C103KAAH
A4A4C60	0160-4832	4	1	CAPACITOR-FXD .01UF +-10% 100VDC CER	04222	SA101C103KAAH
A4A4C61	0160-4832	4	1	CAPACITOR-FXD .01UF +-10% 100VDC CER	04222	SA101C103KAAH
A4A4C62	0160-4574	1	1	CAPACITOR-FXD 1000PF +-10% 100VDC CER	04222	SA101C102KAAH
A4A4C63	0160-4832	4	1	CAPACITOR-FXD .01UF +-10% 100VDC CER	04222	SA101C103KAAH
A4A4C64	0160-2257	3	1	CAPACITOR-FXD 10PF +-5% 50DVDC CER 0+-60	52763	2RDPLX0501RNP0
A4A4C65	0121-0059	7	1	CAPACITOR-V TRMR-CER 2-8PF 350V PC-MTG	52763	304-324-139
A4A4C66*	0160-2249	3	1	CAPACITOR-FXD 4.7PF +-.25PF 500VDC CER	52763	2RDPLX0504R7NP0
A4A4C67	0121-0036	0	1	CAPACITOR-V TRMR-CER 5.5-18PF 350V PC-MT	52763	304-324-237
A4A4C68	3160-4832	4	1	CAPACITOR-FXD .01UF +-10% 100VDC CER	04222	SA101C103KAAH
A4A4C69	0160-0437	7	1	CAP-FXD 12pF 500 V		301-000-P3K0-120J
A4A4C70*	0160-0134	1	1	CAPACITOR-FXD 220PF +-5% 300VDC MICA 0+7	09023	CD15FD221J03
A4A4C71	0160-4832	4	1	CAPACITOR-FXD .01UF +-10% 100VDC CER	04222	SA101C103KAAH
A4A4C72	X60-4832	4	1	CAPACITOR-FXD .01UF +-10% 100VDC CER	04222	SA101C103KAAH
A4A4C73	0121-0446	6	1	CAP-VAR 4.5pF 2pF 160 V	52763	302-450-502
A4A4C74	0121-0446	6	1	CAP-VAR 4.5pF 2pF 160 V	52763	302-450-502
A4A4C76	1160-4832	4	1	CAPACITOR-FXD .01UF +-10% 100VDC CER	04222	SA101C103KAAH
A4A4C77	1160-4832	4	1	CAPACITOR-FXD .01UF +-10% 100VDC CER	04222	SA101C103KAAH
A4A4C78	1160-4832	4	1	CAPACITOR-FXD .01UF +-10% 100VDC CER	04222	SA101C103KAAH
A4A4C79	1160-4832	4	1	CAPACITOR-FXD .01UF +-10% 100VDC CER	04222	SA101C103KAAH
A4A4C80	1160-4832	4	1	CAPACITOR-FXD .01UF +-10% 100VDC CER	04222	SA101C103KAAH
A4A4C81	1160-4832	4	1	CAPACITOR-FXD .01UF +-10% 100VDC CER	04222	SA101C103KAAH
A4A4C84	1160-2207	3	1	CAP-FXD 300pF 300 V MICA	09023	CD15FD301J03
A4A4C86	0160-4832	4	1	CAPACITOR-FXD .01UF +-10% 100VDC CER	04222	SA101C103KAAH
A4A4C87	0160-4835	7	1	CAPACITOR-FXD .1UF +-10% 50VDC CER	04222	SA115C104KAAH
A4A4C88	0160-4835	7	1	CAPACITOR-FXD .1UF +-10% 50VDC CER	04222	SA115C104KAAH
A4A4C89	0160-4832	4	1	CAPACITOR-FXD .01UF +-10% 100VDC CER	04222	SA101C103KAAH
A4A4C90	0160-4832	4	1	CAPACITOR-FXD .01UF +-10% 100VDC CER	04222	SA101C103KAAH
A4A4C91	0160-2258	4	1	CAP-FXD 11pF 500 V	52763	
A4A4C92	0160-0134	1	1	CAPACITOR-FXD 220PF +-5% 300VDC MICA 0+7	09023	CD15FD221J03
A4A4C93	0160-4832	4	1	CAPACITOR-FXD .01UF +-10% 100VDC CER	04222	SA101C103KAAH
A4A4C94	0160-2258	4	1	CAP-FXD 11pF 500 V	52763	
A4A4C95	0160-4832	4	1	CAPACITOR-FXD .01UF +-10% 100VDC CER	04222	SA101C103KAAH
A4A4C96	0160-2258	4	1	CAP-FXD 11pF 500 V	52763	
A4A4C97	0160-0134	1	1	CAPACITOR-FXD 220PF +-5% 300VDC MICA 0+7	09023	CD15FD221J03
A4A4C98	0160-4832	4	1	CAPACITOR-FXD .01UF +-10% 100VDC CER	04222	SA101C103KAAH
A4A4CR1	1901-0047	8	1	DIODE-SWITCHING 20V 75MA 10NS DO-35	71468	
A4A4CR3	1901-0047	8	1	DIODE-SWITCHING 20V 75MA 10NS DO-35	71468	
A4A4CR4	1901-1070	3	1	DIODE-PIN 110V	28480	
A4A4CR5	1901-1070	9	1	DIODE-PIN 110V	28480	

**Indicates factory-selected value*

HP Part Number 85662-60142

A4A4 Bandwidth Filter

Reference Designation	HP Part Number	2-D	Qty	Description	Mfr Code	Mfr Part Number
A4A4CR6	1901-0535	C	1	DIODE-SCHOTTKY SM SIG		
A4A4CR7	1901-0047	E	1	DIODE-SWITCHING 20V 75MA 10NS DO-35	71468	
A4A4CR8	1901-0535	S	1	DIODE-SCHOTTKY SM SIG		
A4A4CR10	1901-0047	E	1	DIODE-SWITCHING 20V 75MA 10NS DO-35	71466	
A4A4CR12	1901-0047	E	1	DIODE-SWITCHING 20V 75MA 10NS DO-35	71466	
A4A4CR13	1901-1070	S	1	DIODE-PIN 110V	28480	
A4A4CR14	1901-0535	S	1	DIODE-SCHOTTKY SM SIG		
A4A4CR15	1901-0047	E	1	DIODE-SWITCHING 20V 75MA 10NS DO-35	71468	
A4A4CR16	1901-0535	S	1	DIODE-SCHOTTKY SM SIG		
A4A4CR18	1901-0047	E	1	DIODE-SWITCHING 20V 75MA 10NS DO-35	71468	
A4A4CR19	1901-1070	S	1	DIODE-PIN 110V	28480	
A4A4CR20	1901-0047	E	1	DIODE-SWITCHING 20V 75MA 10NS DO-35	71468	
A4A4CR21	1901-1070	S	1	DIODE-PIN 110V	28480	
A4A4CR22	1901-0535	S	1	DIODE-SCHOTTKY SM SIG		
A4A4CR23	1901-0047	E	1	DIODE-SWITCHING 20V 75MA 10NS DO-35	71468	
A4A4CR24	1901-0535	S	1	DIODE-SCHOTTKY SM SIG		
A4A4CR25	1901-1070	S	1	DIODE-PIN 110V	28480	
A4A4CR27	1901-0535	S	1	DIODE-SCHOTTKY SM SIG		
A4A4CR28	1901-0535	S	1	DIODE-SCHOTTKY SM SIG		
A4A4CR29	1901-0047	E	1	DIODE-SWITCHING 20V 75MA 10NS DO-35	71468	
A4A4CR30	1901-0047	E	1	DIODE-SWITCHING 20V 75MA 10NS DO-35	71468	
A4A4E1	9170-0029	3	1	CORE-SHIELDING BEAD	02114	56-590-65A2/4A
A4A4E2	9170-0029	3	1	CORE-SHIELDING BEAD	02114	56-590-65A2/4A
A4A4E3	9170-0029	3	1	CORE-SHIELDING BEAD	02114	56-590-65A2/4A
A4A4E4	9170-0029	3	1	CORE-SHIELDING BEAD	02114	56-590-65A2/4A
A4A4E5	9170-0029	3	1	CORE-SHIELDING BEAD	02114	56-590-65A2/4A
A4A4E6	9170-0029	3	1	CORE-SHIELDING BEAD	02114	56-590-65A2/4A
A4A4E7	9170-0029	3	1	CORE-SHIELDING BEAD	02114	56-590-65A2/4A
A4A4E8	1170-0029	3	1	CORE-SHIELDING BEAD	02114	56-590-65A2/4A
A4A4E9	1170-0029	3	1	CORE-SHIELDING BEAD	02114	56-590-65A2/4A
A4A4E10	9170-0029	3	1	CORE-SHIELDING BEAD	02114	56-590-65A2/4A
A4A4E11	9170-0029	3	1	CORE-SHIELDING BEAD	02114	56-590-65A2/4A
A4A4E12	9170-0029	3	1	CORE-SHIELDING BEAD	02114	56-590-65A2/4A
A4A4E13	9170-0029	3	1	CORE-SHIELDING BEAD	02114	56-590-65A2/4A
A4A4E14	9170-0029	3	1	CORE-SHIELDING BEAD	02114	56-590-65A2/4A
A4A4E15	9170-0029	3	1	CORE-SHIELDING BEAD	02114	56-590-65A2/4A
A4A4E16	9170-0029	3	1	CORE-SHIELDING BEAD	02114	56-590-65A2/4A
A4A4L1	9100-1641	D	1	INDUCTOR RF-CH-MLD 240UH +-5% .166D-INX.	99800	1537-94
A4A4L2	9140-0114	4	1	INDUCTOR RF-CH-MLD 10UH +-10% .166D-INX.	99800	1537-36
A4A4L3	9140-0178	D	1	INDUCTOR RF-CH-MLD 12UH +-10% .166D-INX.	99800	1537-38
A4A4L4	9100-2813	D	1	INDUCTOR 385NH +-5% .312D-INX1.016LG-IN	52763	5087-0273-1
A4A4L5	9140-0098	3	1	INDUCTOR RF-CH-MLD 2.2UH +-10% .166D-INX	99800	1537-20
A4A4L6	9100-1620	5	1	INDUCTOR RF-CH-MLD 15UH +-10% .166D-INX.	99800	1537-40
A4A4L7	9140-0453	4	1	INDUCTOR RF-CH-MLD 6.8UH +-5% .166D-INX.	24226	15M-681J
A4A4L8	9140-0098	3	1	INDUCTOR RF-CH-MLD 2.2UH +-10% .166D-INX	99800	1537-20
A4A4L9	9100-1618	1	1	INDUCTOR RF-CH-MLD 5.6UH +-10% .166D-INX	99800	1537-30
A4A4L10	9100-1618	1	1	INDUCTOR RF-CH-MLD 5.6UH +-10% .166D-INX	99800	1537-30

**Indicates factory-selected value*

HP Part Number 85662-60142
A4A4 Bandwidth Filter

Reference Designatio	HP Part Number	C D	Qty	Description	Mfr Code	Mfr Part Number
A4A4L12	9100-1618		1	INDUCTOR RF-CH-MLD 5.6UH +-10% .166D-IN	9980	1537-30
A4A4L13	9100-1620		1	INDUCTOR RF-CH-MLD 15UH +-10% .166D-INX	99801	1537-40
A4A4L14	9100-1618		1	INDUCTOR RF-CH-MLD 5.6UH +-10% .166D-IN	9980	1537-30
A4A4L15	9140-0114		1	INDUCTOR RF-CH-MLD 10UH +-10% .166D-INX	99801	1537-36
A4A4L16	9140-0114		1	INDUCTOR RF-CH-MLD 10UH +-10% .166D-INX	99801	1537-36
A4A4L17	9140-0178		1	INDUCTOR RF-CH-MLD 12UH +-10% .166D-INX	9980	1537-38
A4A4L18	9100-2813		1	INDUCTOR 385NH +-5% .312D-INX1.016LG-IN	5276:	5087-0273-1
A4A4L19	9140-0098		1	INDUCTOR RF-CH-MLD 2.2UH +-10% .166D-IN	9980	1537-20
A4A4L20	9140-0453		1	INDUCTOR RF-CH-MLD 6.8UH +-5% .166D-INX	2422t	15M-681J
A4A4L22	9100-1620		1	INDUCTOR RF-CH-MLD 15UH +-10% .166D-INX	9980	1537-40
A4A4L24	9100-1618		1	INDUCTOR RF-CH-MLD 5.6UH +-10% .166D-IN	9980	1537-30
A4A4L25	9100-1618		1	INDUCTOR RF-CH-MLD 5.6UH +-10% .166D-IN	9980	1537-30
A4A4L26	9100-1618		1	INDUCTOR RF-CH-MLD 5.6UH +-10% .166D-IN	9980C	1537-30
A4A4L27	9140-0112		1	INDUCTOR RF-CH-MLD 4.7UH +-10% .166D-IN	9980C	1537-28
A4A4L28	9140-0112		1	INDUCTOR RF-CH-MLD 4.7UH +-10% .166D-IN	9980C	1537-28
A4A4L29	9140-0112		1	INDUCTOR RF-CH-MLD 4.7UH +-10% .166D-IN	9980C	1537-28
A4A4MP1	6960-0016		1	PLUG-HOLE TR-HD FOR .125-D-HOLE NYL	02766	207-080501-01-0101
A4A4MP2				NOT ASSIGNED		
A4A4MP3	85662-20153		1	COVER BANDWIDTH FILTER	28480	85662-20153
A4A4MP4	6960-0016		1	PLUG-HOLE TR-HD FOR .125-D-HOLE NYL	02768	207-080501-01-0101
A4A4MP7	85701-40001		2	EXTRACTOR PC	28480	86701-40001
A4A4Q1	1855-0267		1	TRANSISTOR J-FET N-CHAN D-MODE TO-92 SI	34677	
A4A4Q2	1853-0007		1	TRANSISTOR PNP 213251 SI TO-18 PD=360MW	04713	213251
A4A4Q3	1853-0007		1	TRANSISTOR PNP 2N3251 SI TO-18 PD=360MW	04713	2N3251
A4A4Q4	1853-0007		1	TRANSISTOR PNP 2N3251 SI TO-18 PD=360MW	04713	2N3251
A4A4Q5	1853-0007		1	TRANSISTOR PNP 2N3251 SI TO-18 PD=360MW	04713	213251
A4A4Q6	1853-0007		1	TRANSISTOR PNP 2N3251 SI TO-18 PD=360MW	04713	2N3251
A4A4Q7	1853-0007		1	TRANSISTOR PNP 213251 SI TO-18 PD=360MW	04713	213251
A4A4Q8	1854-0404		1	TRANSISTOR NPN SI TO-18 PD=360MW	04713	
A4A4Q9	1853-0007		1	TRANSISTOR PNP 213251 SI TO-18 PD=360MW	04713	2N3251
A4A4Q10	1854-0404		1	TRANSISTOR NPN SI TO-18 PD=360MW	04713	
A4A4Q11	1855-0267		1	TRANSISTOR J-FET N-CHAN D-MODE TO-92 SI	34677	
A4A4Q12	1854-0404		1	TRANSISTOR NPN SI TO-18 PD=360MW	04713	
A4A4Q13	1855-0267		1	TRANSISTOR J-FET N-CHAN D-MODE TO-92 SI	34677	
A4A4Q14	1854-0345		1	TRANSISTOR NPN 2N5179 SI TO-72 PD=200MW	04713	2N5179
A4A4R1	0757-0441		1	RESISTOR 8.251: +-1% .125W TF TC=0+-100	19701	SFR25H
A4A4R2	0698-3431		1	RESISTOR 23.7 1% .125W TF TC=D+-100	19701	SFR25H
A4A4R3*	1698-8819		1	RESISTOR 3.83 +-1% .125W TF TC=0+-100	91637	CMF-55-1
A4A4R4	0757-0401		1	RESISTOR 100 +-1% .125W TF TC=0+-100	19701	SFR25H
A4A4R5	1757-0442		1	RESISTOR 10K +-1% .125W TF TC=0+-100	19701	SFR25H
A4A4R6	0757-0397		1	RESISTOR 68.1 +-1% .125W TF TC=0+-100	19701	SFR25H
A4A4R7	1698-3155		1	RESISTOR 4.641: 1% .125W TF TC=D+-100	19701	SFR25H
A4A4R8	0757-0280	3	1	RESISTOR 1K +-1% .125W TF TC=0+-100	19701	SFR25H
A4A4R9	0757-0438	3	1	RESISTOR 5.11K +-1% .125W TF TC=0+-100	19701	SFR25H
A4A4R10	1698-3441	8	1	RESISTOR 215 1% .125W TF TC=0+-100	19701	SFR25H
A4A4R11	0757-0443	0	1	RESISTOR 11K +-1% .125W TF TC=0+-100	19701	SFR25H
A4A4R12	0698-0082	7	1	RESISTOR 464 1% .125W TF TC=0+-100	19701	SFR25H
A4A4R13	0698-3444	1	1	RESISTOR 316 1% .125W TF TC=0+-100	19701	SFR25H

**Indicates factory-selected value*

HP Part Number 85662-60142

A4A4 Bandwidth Filter

Reference Designation	HP Part Number	C D	Qty	Description	Mfr Code	Mfr Part Number
A4A4R14	0698-3442		1	RESISTOR 237 1% .125W TF TC=0+-100	1970	SFR25H
A4A4R15	0757-0279		1	RESISTOR 3.16K +-1% .125W TF TC=0+-100	1970.	SFR25H
A4A4R16*	0757-0200		1	RESISTOR 5.621: +-1% .125W TF TC=0+-100	1970:	SFR25H
A4A4R17	0698-3156		1	RESISTOR 14.7K 1% .125W TF TC=0+-100	1970:	SFR25H
A4A4R18	0698-3156		1	RESISTOR 14.7K 1% .125W TF TC=0+-100	1970:	SFR25H
A4A4R19	0757-0280		1	RESISTOR 1K +-1% .125W TF TC=0+-100	1970:	SFR25H
A4A4R20*	0757-0441		1	RESISTOR 8.251: +-1% .125W TF TC=0+-100	1970:	SFR25H
A4A4R21	0757-0290		1	RESISTOR 6.19K +-1% .125W TF TC=0+-100	19701	SFR25H
A4A4R22	0757-0290		1	RESISTOR 6.19K +-1% .125W TF TC=0+-100	19701	SFR25H
A4A4R24	0698-3431		1	RESISTOR 23.7 1% .125W TF TC=0+-100	19701	SFR25H
A4A4R25	0757-0401		1	RESISTOR 100 +-1% .125W TF TC=0+-100	19701	SFR25H
A4A4R26	0757-0280		1	RESISTOR 1K +-1% .125W TF TC=0+-100	19701	SFR25H
A4A4R27	0698-3155		1	RESISTOR 4.641: 1% .125W TF TC=0+-100	19701	SFR25H
A4A4R28	0698-0082		1	RESISTOR 464 1% .125W TF TC=0+-100	19701	SFR25H
A4A4R29	0757-0443		1	RESISTOR 11K +-1% .125W TF TC=0+-100	19701	SFR25H
A4A4R30	0757-0438		1	RESISTOR 5.11K +-1% .125W TF TC=0+-100	19701	SFR25H
A4A4R31	0698-3441		1	RESISTOR 215 1% .125W TF TC=0+-100	19701	SFR25H
A4A4R32	0698-3444		1	RESISTOR 316 1% .125W TF TC=0+-100	19701	SFR25H
A4A4R33	0698-3442		1	RESISTOR 237 1% .125W TF TC=0+-100	19701	SFR25H
A4A4R34	0757-0279		1	RESISTOR 3.16K +-1% .125W TF TC=0+-100	19701	SFR25H
A4A4R35*	0757-0418		1	RESISTOR 619 +-1% .125W TF TC=0+-100	19701	SFR25H
A4A4R37	0757-0442		1	RESISTOR 10K +-1% .125W TF TC=0+-100	19701	SFR25H
A4A4R39	0757-0280		1	RESISTOR 1K +-1% .125W TF TC=0+-100	19701	SFR25H
A4A4R40*	0757-0441		1	RESISTOR 8.251: +-1% .125W TF TC=0+-100	19701	SFR25H
A4A4R41	0757-0290		1	RESISTOR 6.19K +-1% .125W TF TC=0+-100	19701	SFR25H
A4A4R42*				NORMALLY OPEN		
A4A4R43	2100-3163		1	RESISTOR-TRMR 1M 20% TKF SIDE-ADJ 17-TRN	73138	89PR1M
A4A4R44*				NORMALLY OPEN		
A4A4R45*	0757-0346		1	RESISTOR 10 +-1% .125W TF TC=0+-100	91637	CMF-55-1, T-1
A4A4R46	0757-0416		1	RESISTOR 511 +-1% .125W TF TC=0+-100	19701	SFR25H
A4A4R48	0757-0290		1	RESISTOR 6.19K +-1% .125W TF TC=0+-100	19701	SFR25H
A4A4R49	2100-3052		1	RESISTOR-TRMR 50 10% TKF SIDE-ADJ 17-TRN	73138	89PR50
A4A4R50	0757-0401		1	RESISTOR 100 +-1% .125W TF TC=0+-100	19701	SFR25H
A4A4R51	0757-0280		1	RESISTOR 1K +-1% .125W TF TC=0+-100	19701	SFR25H
A4A4R52	0698-3155		1	RESISTOR 4.64K 1% .125W TF TC=0+-100	19701	SFR25H
A4A4R53	0698-0082		1	RESISTOR 464 1% .125W TF TC=0+-100	19701	SFR25H
A4A4R54	0757-0443		1	RESISTOR 11K +-1% .125W TF TC=0+-100	19701	SFR25H
A4A4R55	0757-0438		1	RESISTOR 5.11K +-1% .125W TF TC=0+-100	19701	SFR25H
A4A4R56	0698-3441		1	RESISTOR 215 1% .125W TF TC=0+-100	19701	SFR25H
A4A4R57	0698-3444		1	RESISTOR 316 1% .125W TF TC=0+-100	19701	SFR25H
A4A4R58	0698-3442		1	RESISTOR 237 1% .125W TF TC=0+-100	19701	SFR25H
A4A4R59	0757-0279		1	RESISTOR 3.16K +-1% .125W TF TC=0+-100	19701	SFR25H
A4A4R60*	0757-0200		1	RESISTOR 5.621: +-1% .125W TF TC=0+-100	19701	SFR25H
A4A4R61	0698-3156		1	RESISTOR 14.7K 1% .125W TF TC=0+-100	19701	SFR25H
A4A4R62	0698-3156		1	RESISTOR 14.7K 1% .125W TF TC=0+-100	19701	SFR25H
A4A4R63	0757-0280		1	RESISTOR 1K +-1% .125W TF TC=0+-100	19701	SFR25H
A4A4R64*	0757-0288		1	RESISTOR 9.09K +-1% .125W TF TC=0+-100	19701	SFR25H

**Indicates factory-selected value*

HP Part Number 85662060142

A4A4 Bandwidth Filter

Reference Designatior	HP Part Number	C D	Qty	Description	Mfr Code	Mfr Part Number
A4A4R65*	0757-0317		1	RESISTOR 1.33K +-1% .125W TF TC=0+-100	1970	SFR25H
A4A4R66	0757-0290		1	RESISTOR 6.19K +-1% .125W TF TC=0+-100	1970.	SFR25H
A4A4R67	0757-0290		1	RESISTOR 6.19K +-1% .125W TF TC=0+-100	1970:	SFR25H
A4A4R68	0757-0417		1	RESISTOR 562 +-1% .125W TF TC=0+-100	1970:	SFR25H
A4A4R70	0698-3440		1	RESISTOR 196 1% .125W TF TC=0+-100	1970:	SFR25H
A4A4R72	0698-3438		1	RESISTOR 147 1% .125W TF TC=0+-100	1970:	SFR25H
A4A4R73	0698-0082		1	RESISTOR 464 1% .125W TF TC=0+-100	19701	SFR25H
A4A4R74	0757-0438		1	RESISTOR 5.11K +-1% .125W TF TC=0+-100	19701	SFR25H
A4A4R75	0757-0438		1	RESISTOR 5.11K +-1% .125W TF TC=0+-100	19701	SFR25H
A4A4R76	3757-0438		1	RESISTOR 5.11K +-1% .125W TF TC=0+-100	19701	SFR25H
A4A4R82	)757-0401	(	1	RESISTOR 100 +-1% .125W TF TC=0+-100	19701	SFR25H
A4A4R83	)757-0442	(	1	RESISTOR 10K +-1% .125W TF TC=0+-100	19701	SFR25H
A4A4R84	)757-0442	(	1	RESISTOR 10K +-1% .125W TF TC=0+-100	19701	SFR25H
A4A4R85	1757-0442	(	1	RESISTOR 10K +-1% .125W TF TC=0+-100	19701	SFR25H
A4A4R88	1698-3154	(	1	RESISTOR 4.22K 1% .125W TF TC=0+-100	19701	SFR25H
A4A4R89	1698-3154	(	1	RESISTOR 4.221: 1% .125W TF TC=0+-100	19701	SFR25H
A4A4R90	)698-3154	(	1	RESISTOR 4.22K 1% .125W TF TC=0+-100	19701	SFR25H
A4A4R91	)757-0180	2	1	RESISTOR 31.6 +-1% .125W TF TC=0+-100	19701	SFR25H
A4A4R92	)757-0180	2	1	RESISTOR 31.6 +-1% .125W TF TC=0+-100	19701	SFR25H
A4A4R93	)757-0180	2	1	RESISTOR 31.6 +-1% .125W TF TC=0+-100	19701	SFR25H
A4A4R94*	1757-0465	E	1	RESISTOR 100K +-1% .125W TF TC=0+-100	19701	SFR25H
A4A4R95	)757-0465	E	1	RESISTOR 100K +-1% .125W TF TC=0+-100	19701	SFR25H
A4A4R96	1757-0420	3	1	RESISTOR 750 +-1% .125W TF TC=0+-100	19701	SFR25H
A4A4TP1	1360-1788	7	1	CONNECTOR-SGL CONT PIN .045-IN-BSC-SZ SQ	04574	
A4A4TP2	1360-1788	7	1	CONNECTOR-SGL CONT PIN .045-IN-BSC-SZ SQ	04574	
A4A4TP3	251-0600	3	1	CONNECTOR-SGL CONT PIN 1.14-MM-BSC-SZ SQ	27264	16-06-0034
A4A4TP4	1360-1788	7	1	CONNECTOR-SGL CONT PIN .045-IN-BSC-SZ SQ	04574	
A4A4TP5	1360-1788	7	1	CONNECTOR-SGL CONT PIN .045-IN-BSC-SZ SQ	04574	
A4A4TP6	1360-1788	7	1	CONNECTOR-SGL CONT PIN .045-IN-BSC-SZ SQ	04574	
A4A4TP7	1360-1788	7	1	CONNECTOR-SGL CONT PIN .045-IN-BSC-SZ SQ	04574	
A4A4TP8	251-0600	3	1	CONNECTOR-SGL CONT PIN 1.14-MM-BSC-SZ SQ	27264	16-06-0034
A4A4VR1	902-0048	1	1	DIODE-ZNR 6.81V 5% DO-35 PD=.4W	04713	
A4A4Y1	410-1029	5	1	CRYSTAL. QUARTZ, PART OF A MATCHED SET OF SIX, INCLUDES A4A4Y1-3, A4A6A1Y1, AND A4A8Y1-2		
A4A4Y2				CRYSTAL. QUARTZ, PART OF A MATCHED SET OF SIX, INCLUDES A4A4Y1-3, A4A6A1Y1, AND A4A8Y1-2 (REFER TO A4A4Y1)		
A4A4Y3				CRYSTAL, QUARTZ, PART OF A MATCHED SET OF SIX, INCLUDES A4A4Y1-3, A4A6A1Y1, AND A4A8Y1-2 (REFER TO A4A4Y1)		

**Indicates factory-selected value*

HP Part Number 85662-60189

A4A4 Bandwidth Filter

Reference Designation	HP Part Number	CD	Qty	Description	Mfr Code	Mfr Part Number
A4A4	85662-60189	6	1	BOARD ASSEMBLY, BANDWIDTH FILTER (SERIAL PREFIX: 2810A)	28480	85662-60189
A4A4C1	0160-4832	4	1	CAPACITOR-FXD .01UF +-10% 100VDC CER	04222	SA101C103KAAH
A4A4C2	0160-4832	4	1	CAPACITOR-FXD .01UF +-10% 100VDC CER	04222	SA101C103KAAH
A4A4C3	0160-5899	5	1	CAPACITOR-FXD 7.5PF +-.5PF 200VDC CER 0+		MA12C0G2D7R5D
A4A4C4	0160-4832	4	1	CAPACITOR-FXD .01UF +-10% 100VDC CER	04222	SA101C103KAAH
A4A4C5	0160-4832	4	1	CAPACITOR-FXD .01UF +-10% 100VDC CER	04222	SA101C103KAAH
A4A4C6	0160-4833	5	1	CAPACITOR-FXO .022UF +-10% 100VDC CER	04222	SA201C223KAAH
A4A4C7	0160-4832	4	1	CAPACITOR-FXD .01UF +-10% 100VDC CER	04222	SA101C103KAAH
A4A4C8	0160-4791	4	1	CAPACITOR-FXD 10PF +-5% 100VDC CER 0+-30	04222	SA102A100JAAH
A4A4C9	0121-0059	7	1	CAPACITOR-V TRMR-CER 2-8PF 350V PC-MTG	52763	304-324-139
A4A4C10*	0160-4795	8	1	CAPACITOR-FXD 4.7PF +-.5PF 100VDC CER 0+	04222	SA102A4R7DAAH
A4A4C11	0160-4832	4	1	CAPACITOR-FXO .01UF +-10% 100VDC CER	04222	SA101C103KAAH
A4A4C13	0160-4832	4	1	CAPACITOR-FXD .01UF +-10% 100VDC CER	04222	SA101C103KAAH
A4A4C14	0160-4832	4	1	CAPACITOR-FXD .01UF +-10% 100VDC CER	04222	SA101C103KAAH
A4A4C15	0160-4574	1	1	CAPACITOR-FXO 1000PF +-10% 100VDC CER	04222	SA101C102KAAH
A4A4C16	0160-0437	7	1	CAPACITOR-FXD 12pF 500 V		301-000-P3K0-120J
A4A4C17*	0160-0134	1	1	CAPACITOR-FXD 220PF +-5% 300VOC MICA 0+7	09023	CD15FD221J03
A4A4C18	0160-4832	4	1	CAPACITOR-FXD .01UF +-10% 100VDC CER	04222	SA101C103KAAH
A4A4C19	0121-0036	0	1	CAPACITOR-V TRMR-CER 5.5-18PF 350V PC-MT	52763	304-324-237
A4A4C20	0121-0444	4	1	CAPACITOR-VAR 9pF 3pF 160 V	52763	302-450-204
A4A4C21	0160-4832	4	1	CAPACITOR-FXD .01UF +-10% 100VDC CER	04222	SA101C103KAAH
A4A4C22	0160-4832	4	1	CAPACITOR-FXD .01UF +-10% 100VDC CER	04222	SA101C103KAAH
A4A4C23	0160-4832	4	1	CAPACITOR-FXD .01UF +-10% 100VDC CER	04222	SA101C103KAAH
A4A4C24	0160-4832	4	1	CAPACITOR-FXD .01UF +-10% 100VDC CER	04222	SA101C103KAAH
A4A4C25	0160-4832	4	1	CAPACITOR-FXO .01UF +-10% 100VDC CER	04222	SA101C103KAAH
A4A4C26	0160-4832	4	1	CAPACITOR-FXO .01UF +-10% 100VDC CER	04222	SA101C103KAAH
A4A4C27	0160-4832	4	1	CAPACITOR-FXD .01UF +-10% 100VDC CER	04222	SA101C103KAAH
A4A4C28	0140-0194	1	1	CAPACITOR-FXD 110PF +-5% 300VDC MICA	09023	CD15FD111J03
A4A4C29	0160-4832	4	1	CAPACITOR-FXD .01UF +-10% 100VDC CER	04222	SA101C103KAAH
A4A4C30	0160-4832	4	1	CAPACITOR-FXD .01UF +-10% 100VDC CER	04222	SA101C103KAAH
A4A4C31	0160-2207	3	1	CAPACITOR-FXD 300pF 300 V MICA	09023	CD15FD301J03
A4A4C32	0160-4832	4	1	CAPACITOR-FXD .01UF +-10% 100VDC CER	04222	SA101C103KAAH
A4A4C33	0160-4833	5	1	CAPACITOR-FXD .022UF +-10% 100VDC CER	04222	SA201C223KAAH
A4A4C34	0160-4832	4	1	CAPACITOR-FXD .01UF +-10% 100VDC CER	04222	SA101C103KAAH
A4A4C35	0160-4832	4	1	CAPACITOR-FXD .01UF +-10% 100VDC CER	04222	SA101C103KAAH
A4A4C36	0160-4832	4	1	CAPACITOR-FXD .01UF +-10% 100VDC CER	04222	SA101C103KAAH
A4A4C37	0160-4791	4	1	CAPACITOR-FXD 10PF +-5% 100VDC CER 0+-30	04222	SA102A100JAAH
A4A4C38*	0160-4795	8	1	CAPACITOR-FXD 4.7PF +-.5PF 100VDC CER	04222	SA102A4R7DAAH
A4A4C39	0121-0059	7	1	CAPACITOR-V TRMR-CER 2-8PF 350V PC-MTG	52763	304-324-139
A4A4C40	0160-4832	4	1	CAPACITOR-FXD .01UF +-10% 100VDC CER	04222	SA101C103KAAH
A4A4C41	0121-0452	4	1	CAPACITOR-V TRMR-AIR 1.3-5.4PF 175V PC-M	74970	187-0103-028
A4A4C43	0121-0452	4	1	CAPACITOR-V TRMR-AIR 1.3-5.4PF 175V PC-M	74970	187-0103-028
A4A4C46	0160-4835	7	1	CAPACITOR-FXD .1UF +-10% 50VDC CER	04222	SA115C104KAAH
A4A4C47	0160-4832	4	1	CAPACITOR-FXD .01UF +-10% 100VDC CER	04222	SA101C103KAAH
A4A4C48	0160-4832	4	1	CAPACITOR-FXD .01UF +-10% 100VDC CER	04222	SA101C103KAAH
A4A4C49	0160-4832	4	1	CAPACITOR-FXD .01UF +-10% 100VDC CER	04222	SA101C103KAAH

**Indicates factory-selected value*

HP Part Number 85662-60189

A4A4 Bandwidth Filter

Reference Designation	HP Part Number	CD	Qty	Description	Mfr Code	Mfr Part Number
A4A4C50	0160-4832	4	1	CAPACITOR-FXD .01UF +-10% 100VDC CER	04222	SA101C103KAAH
A4A4C52	0160-4832	4	1	CAPACITOR-FXD .01UF +-10% 100VDC CER	04222	SA101C103KAAH
A4A4C53	0160-4832	4	1	CAPACITOR-FXD .01UF +-10% 100VDC CER	04222	SA101C103KAAH
A4A4C54	0160-4832	4	1	CAPACITOR-FXD .01UF +-10% 100VDC CER	04222	SA101C103KAAH
A4A4C55	0160-4833	5	1	CAPACITOR-FXD .022UF +-10% 100VDC CER	04222	SA201C223KAAH
A4A4C56	0160-4832	4	1	CAPACITOR-FXD .01UF +-10% 100VDC CER	04222	SA101C103KAAH
A4A4C57	0160-2207	3	1	CAPACITOR-FXO 300pF 300 V MICA	09023	CD15FD301J03
A4A4C58	0160-4832	4	1	CAPACITOR-FXD .01UF +-10% 100VDC CER	04222	SA101C103KAAH
A4A4C59	0160-4832	4	1	CAPACITOR-FXD .01UF +-10% 100VDC CER	04222	SA101C103KAAH
A4A4C60	0160-4832	4	1	CAPACITOR-FXD .01UF +-10% 100VDC CER	04222	SA101C103KAAH
A4A4C61	0160-4832	4	1	CAPACITOR-FXD .01UF +-10% 100VDC CER	04222	SA101C103KAAH
A4A4C62	0160-4574	1	1	CAPACITOR-FXD 1000PF +-10% 100VDC CER	04222	SA101C102KAAH
A4A4C63	0160-4832	4	1	CAPACITOR-FXD .01UF +-10% 100VDC CER	04222	SA101C103KAAH
A4A4C64	0160-4791	4	1	CAPACITOR-FXD 10PF +-5% 100VDC CER 0+-30	04222	SA102A100JAAH
A4A4C65	0121-0059	7	1	CAPACITOR-V TRMR-CER 2-8PF 350V PC-MTG	52763	304-324-139
A4A4C66*	0160-4795	8	1	CAPACITOR-FXO 4.7PF +-.5PF 100VDC CER	04222	SA102A4R7DAAH
A4A4C67	0121-0036	0	1	CAPACITOR-V TRMR-CER 5.5-18PF 350V PC-MT	52763	304-324-237
A4A4C68	0160-4832	4	1	CAPACITOR-FXD .01UF +-10% 100VDC CER	04222	SA101C103KAAH
A4A4C69	0160-0437	7	1	CAPACITOR-FXD 12pF 500 V		301-000-P3K0-120J
A4A4C70*	0160-0134	1	1	CAPACITOR-FXD 220PF +-5% 300VDC MICA 0+7	09023	CD15FD221J03
A4A4C71	0160-4832	4	1	CAPACITOR-FXD .01UF +-10% 100VDC CER	04222	SA101C103KAAH
A4A4C72	0160-4832	4	1	CAPACITOR-FXD .01UF +-10% 100VDC CER	04222	SA101C103KAAH
A4A4C73	0121-0444	4	1	CAPACITOR-VAR 9pF 3pF 160 V	52763	302-450-204
A4A4C74	0121-0444	4	1	CAPACITOR-VAR 9pF 3pF 160 V	52763	302-450-204
A4A4C76	0160-4832	4	1	CAPACITOR-FXD .01UF +-10% 100VDC CER	04222	SA101C103KAAH
A4A4C77	0160-4832	4	1	CAPACITOR-FXD .01UF +-10% 100VDC CER	04222	SA101C103KAAH
A4A4C78	0160-4832	4	1	CAPACITOR-FXD .01UF +-10% 100VDC CER	04222	SA101C103KAAH
A4A4C79	0160-4832	4	1	CAPACITOR-FXD .01UF +-10% 100VDC CER	04222	SA101C103KAAH
A4A4C80	0160-4832	4	1	CAPACITOR-FXD .01UF +-10% 100VDC CER	04222	SA101C103KAAH
A4A4C81	0160-4832	4	1	CAPACITOR-FXD .01UF +-10% 100VDC CER	04222	SA101C103KAAH
A4A4C84	0160-2207	3	1	CAPACITOR-FXO 300pF 300 V MICA	09023	CD15FD301J03
A4A4C86	0160-4832	4	1	CAPACITOR-FXD .01UF +-10% 100VDC CER	04222	SA101C103KAAH
A4A4C87	0160-4835	7	1	CAPACITOR-FXO .1UF +-10% 50VDC CER	04222	SA115C104KAAH
A4A4C88	0160-4835	7	1	CAPACITOR-FXD .1UF +-10% 50VDC CER	04222	SA115C104KAAH
A4A4C89	0160-4832	4	1	CAPACITOR-FXD .01UF +-10% 100VDC CER	04222	SA101C103KAAH
A4A4C90	0160-4832	4	1	CAPACITOR-FXD .01UF +-10% 100VDC CER	04222	SA101C103KAAH
A4A4C91	0160-5902	1	1	CAPACITOR-FXO 11PF +-5% 200VDC CER 0+-30		MA12C0G2D110J
A4A4C92*	0160-0134	1	1	CAPACITOR-FXD 220PF +-5% 300VDC MICA 0+7	09023	CD15FD221J03
A4A4C93	0160-4832	4	1	CAPACITOR-FXD .01UF +-10% 100VDC CER	04222	SA101C103KAAH
A4A4C94	0160-5902	1	1	CAPACITOR-FXD 11PF +-5% 200VDC CER 0+-30		MA12C0G2D110J
A4A4C95	0160-4832	4	1	CAPACITOR-FXD .01UF +-10% 100VDC CER	04222	SA101C103KAAH
A4A4C96	0160-5902	1	1	CAPACITOR-FXD 11PF +-5% 200VDC CER 0+-30		MA12C0G2D110J
A4A4C97*	0160-0134	1	1	CAPACITOR-FXD 220PF +-5% 300VDC MICA 0+7	09023	CD15FD221J03
A4A4C98	0160-4832	4	1	CAPACITOR-FXD .01UF +-10% 100VDC CER	04222	SA101C103KAAH
A4A4C99	0160-6634	8	1	CAPACITOR-FXD 9pF 50 V		CC45UJ1H090DYP
A4A4C100	0160-6634	8	1	CAPACITOR-FXO 9pF 50 V		CC45UJ1H090DYP
A4A4C101	0160-6634	8	1	CAPACITOR-FXD 9pF 50 V		CC45UJ1H090DYP
A4A4CR1	1901-0047	8	1	DIODE-SWITCHING 20V 75MA 10NS DO-35	71468	

Indicates factory-selected value

HP Part Number 85662-60189
A4A4 Bandwidth Filter

Reference Designation	HP Part Number	CD	Qty	Description	Mfr Code	Mfr Part Number
A4A4CR3	1901-0047		1	DIODE-SWITCHING 20V 75MA 10NS DO-35	71461	
A4A4CR4	1901-1070		1	DIODE-PIN 110V	2848(	
A4A4CR5	1901-1070		1	DIODE-PIN 110V	2848(	
A4A4CR6	1901-0535		1	DIODE-SCHOTTKY SM SIG		
A4A4CR7	1901-0047		1	DIODE-SWITCHING 20V 75MA 10NS DO-35	7146E	
A4A4CR8	1901-0535		1	DIODE-SCHOTTKY SM SIG		
A4A4CR10	1901-0047		1	DIODE-SWITCHING 20V 75MA 10NS DO-35	7146E	
A4A4CR12	1901-0047		1	DIODE-SWITCHING 20V 75MA 10NS DO-35	71466	
A4A4CR13	1901-1070		1	DIODE-PIN 110V	2848C	
A4A4CR14	1901-0535		1	DIODE-SCHOTTKY SM SIG		
A4A4CR15	1901-0047		1	DIODE-SWITCHING 20V 75MA 10NS DO-35	71468	
A4A4CR16	1901-0535		1	DIODE-SCHOTTKY SM SIG		
A4A4CR18	1901-0047		1	DIODE-SWITCHING 20V 75MA 10NS DO-35	71468	
A4A4CR19	1901-1070		1	DIODE-PIN 110V	28480	
A4A4CR20	1901-0047		1	DIODE-SWITCHING 20V 75MA 10NS DO-35	71468	
A4A4CR21	1901-1070		1	DIODE-PIN 110V	28480	
A4A4CR22	1901-0535		1	DIODE-SCHOTTKY SM SIG		
A4A4CR23	1901-0047		1	DIODE-SWITCHING 20V 75MA 10NS DO-35	71468	
A4A4CR24	1901-0535		1	DIODE-SCHOTTKY SM SIG		
A4A4CR25	1901-1070		1	DIODE-PIN 110V	28480	
A4A4CR27	1901-0535		1	DIODE-SCHOTTKY SM SIG		
A4A4CR28	1901-0535		1	DIODE-SCHOTTKY SM SIG		
A4A4CR29	1901-0047		1	DIODE-SWITCHING 20V 75MA 10NS DO-35	71468	
A4A4CR30	1901-0047		1	DIODE-SWITCHING 20V 75MA 10NS DO-35	71468	
A4A4E1	9170-0029		1	CORE-SHIELDING BEAD	02114	56-590-65A2/4A
A4A4E2	9170-0029		1	CORE-SHIELDING BEAD	02114	56-590-65A2/4A
A4A4E3	9170-0029		1	CORE-SHIELDING BEAD	02114	56-590-65A2/4A
A4A4E4	9170-0029		1	CORE-SHIELDING BEAD	02114	56-590-65A2/4A
A4A4E5	9170-0029		1	CORE-SHIELDING BEAD	02114	56-590-65A2/4A
A4A4E6	9170-0029		1	CORE-SHIELDING BEAD	02114	56-590-65A2/4A
A4A4E7	9170-0029		1	CORE-SHIELDING BEAD	02114	56-590-65A2/4A
A4A4E8	9170-0029		1	CORE-SHIELDING BEAD	02114	56-590-65A2/4A
A4A4E9	9170-0029		1	CORE-SHIELDING BEAD	02114	56-590-65A2/4A
A4A4E10	9170-0029		1	CORE-SHIELDING BEAD	02114	56-590-65A2/4A
A4A4E11	9170-0029		1	CORE-SHIELDING BEAD	02114	56-590-65A2/4A
A4A4E12	9170-0029		1	CORE-SHIELDING BEAD	02114	56-590-65A2/4A
A4A4E13	9170-0029		1	CORE-SHIELDING BEAD	02114	56-590-65A2/4A
A4A4E14	9170-0029		1	CORE-SHIELDING BEAD	02114	56-590-65A2/4A
A4A4E15	9170-0029		1	CORE-SHIELDING BEAD	02114	56-590-65A2/4A
A4A4E16	9170-0029		1	CORE-SHIELDING BEAD	02114	56-590-65A2/4A
A4A4E17	9170-0029		1	CORE-SHIELDING BEAD	02114	56-590-65A2/4A
A4A4L1	9100-1641		1	INDUCTOR RF-CH-ML0 240UH +-5% .166D-INX.	99800	1537-94
A4A4L2	9100-0539		1	INDUCTOR RF-CH-ML0 10UH +-5% .156D-INX.3	24226	15M102J
A4A4L3	9140-0398		1	INDUCTOR RF-CH-ML0 12UH +-5% .166D-INX.3	24226	15M122J
A4A4L4	9100-2813		1	INDUCTOR 385NH +-5% .312D-INX1.016LG-IN	52763	5087-0273-1
A4A4L5	9140-0399		1	INDUCTOR RF-CH-ML0 2.2UH +-5% .166D-INX.	24226	15M221J
A4A4L6	9100-3912		1	INDUCTOR RF-CH-ML0 15UH +-5% .166D-INX.3	24226	15M152J

**Indicates factory-selected value*

HP Part Number 85662-60189

A4A4 Bandwidth Filter

Reference Designation	HP Part Number	C. D	Qty	Description	Mfr Code	Mfr Part Number
A4A4L7	9140-0453	4	1	INDUCTOR RF-CH-ML0 6.8UH +-5% .166D-IN	24226	15M-681J
A4A4L8	9140-0399	7	1	INDUCTOR RF-CH-ML0 2.2UH +-5% .166D-IN	24226	15M221J
A4A4L9	9100-3560	6	1	INDUCTOR RF-CH-ML0 5.6UH +-5% .166D-IN	24226	15M561J
A4A4L10	9100-3560	6	1	INDUCTOR RF-CH-ML0 5.6UH +-5% .166D-IN	24226	15M561J
A4A4L12	9100-3560	6	1	INDUCTOR RF-CH-ML0 5.6UH +-5% .166D-IN	24226	15M561J
A4A4L13	9100-3912	2	1	INDUCTOR RF-CH-ML0 15UH +-5% .166D-INX	24226	15M152J
A4A4L14	9100-3560	6	1	INDUCTOR RF-CH-ML0 5.6UH +-5% .166D-IN	24226	15M561J
A4A4L15	9100-0539	3	1	INDUCTOR RF-CH-ML0 10UH +-5% .156D-INX	24226	15M102J
A4A4L16	9100-0539	3	1	INDUCTOR RF-CH-ML0 10UH +-5% .156D-INX	24226	15M102J
A4A4L17	9140-0398	6	1	INDUCTOR RF-CH-ML0 12UH +-5% .166D-INX	24226	15M122J
A4A4L18	9100-2813	C	1	INDUCTOR 385NH +-5% .312D-INX1.016LG-I	52763	5087-0273-1
A4A4L19	9140-0399	7	1	INDUCTOR RF-CH-ML0 2.2UH +-5% .166D-IN	24226	15M221J
A4A4L20	9140-0453	4	1	INDUCTOR RF-CH-ML0 6.8UH +-5% .166D-IN	24226	15M-681J
A4A4L22	9100-3912	2	1	INDUCTOR RF-CH-ML0 15UH +-5% .166D-INX	24226	15M152J
A4A4L24	9100-3560	6	1	INDUCTOR RF-CH-ML0 5.6UH +-5% .166D-IN	24226	15M561J
A4A4L25	9100-3560	6	1	INDUCTOR RF-CH-ML0 5.6UH +-5% .166D-IN	24226	15M561J
A4A4L26	9100-3560	6	1	INDUCTOR RF-CH-ML0 5.6UH +-5% .166D-IN	24226	15M561J
A4A4L27	9100-3562	a	1	INDUCTOR RF-CH-ML0 4.7UH +-5% .166D-IN	24226	15M471J
A4A4L28	9100-3562	a	1	INDUCTOR RF-CH-ML0 4.7UH +-5% .166D-IN	24226	15M471J
A4A4L29	9100-3562	8	1	INDUCTOR RF-CH-ML0 4.7UH +-5% .166D-IN	24226	15M471J
A4A4MP1				NOT ASSIGNED		
A4A4MP2	6960-0016	0	2	'LUG-HOLE TR-HO FOR .125-D-HOLE NYL	02768	207-080501-01-0101
A4A4MP3	85662-20153	0	1	COVER BANDWIDTH FILTER	28480	85662-20153
A4A4MP4	86701-40001	9	1	EXTRACTOR PC	28480	86701-40001
A4A4MP6	2200-0101	0	4	SCREW-MACH 4-40 .188-IN-LG PAN-HO-POZI	77250	
A4A4Q1	1855-0267	5	1	TRANSISTOR J-FET N-CHAN D-MODE TO-92 SI	34677	
A4A4Q2	1853-0007	7	1	TRANSISTOR PNP 2N3251 SI TO-18 PD=360MW	04713	2N3251
A4A4Q3	1853-0007	7	1	TRANSISTOR PNP 213251 SI TO-18 PD=360MW	04713	2N3251
A4A4Q4	1853-0007	7	1	TRANSISTOR PNP 2N3251 SI TO-18 PD=360MW	04713	2N3251
A4A4Q5	1853-0007	7	1	TRANSISTOR PNP 2N3251 SI TO-18 PD=360MW	04713	2N3251
A4A4Q6	1853-0007	7	1	TRANSISTOR PNP 2N3251 SI TO-18 PD=360MW	04713	2N3251
A4A4Q7	1853-0007	7	1	TRANSISTOR PNP 2N3251 SI TO-18 PD=360MW	04713	2N3251
A4A4Q8	1854-0404	0	1	TRANSISTOR NPN SI TO-18 PD=360MW	04713	
A4A4Q9	1853-0007	7	1	TRANSISTOR PNP 2N3251 SI TO-18 PD=360MW	04713	2N3251
A4A4Q10	1854-0404	0	1	TRANSISTOR NPN SI TO-18 PD=360MW	04713	
A4A4Q11	1855-0267	5	1	TRANSISTOR J-FET N-CHAN D-MODE TO-92 SI	34677	
A4A4Q12	1854-0404	0	1	TRANSISTOR NPN SI TO-18 PD=360MW	04713	
A4A4Q13	1855-0267	5	1	TRANSISTOR J-FET N-CHAN D-MODE TO-92 SI	34677	
A4A4Q14	1854-0345	8	1	TRANSISTOR NPN 2N5179 SI TO-72 PD=200MW	04713	2N5179
A4A4R1	0757-0441	8	1	RESISTOR 8.25K +-1% .125W TF TC=0+-100	19701	SFR25H
A4A4R2	0698-3431	6	1	RESISTOR 23.7 1% .125W TF TC=0+-100	19701	SFR25H
A4A4R3*	0698-8819	4	1	RESISTOR 3.83 +-1% .125W TF TC=0+-100	91637	CMF-55-1
A4A4R4	0757-0401	0	1	RESISTOR 100 +-1% .125W TF TC=0+-100	19701	SFR25H
A4A4R5	0757-0442	9	1	RESISTOR 10K +-1% .125W TF TC=0+-100	19701	SFR25H
A4A4R6	0757-0397	3	1	RESISTOR 68.1 +-1% .125W TF TC=0+-100	19701	SFR25H
A4A4R7	0698-3155	1	1	RESISTOR 4.64K 1% .125W TF TC=0+-100	19701	SFR25H
A4A4R8	0757-0280	3	1	RESISTOR 1K +-1% .125W TF TC=0+-100	19701	SFR25H
A4A4R9	0757-0438	3	1	RESISTOR 5.11K +-1% .125W TF TC=0+-100	19701	SFR25H

**Indicates factory-selected value*

HP Part Number 85662-60189

A4A4 Bandwidth Filter

Reference Designation	HP Part Number	C D	Qty	Description	Mfr Code	Mfr Part Number
A4A4R10	0698-3441	8	1	RESISTOR 215 1% .125W TF TC=0+-100	19701	SFR25H
A4A4R11	0757-0443	0	1	RESISTOR 11K +-1% .125W TF TC=0+-100	19701	SFR25H
A4A4R12	0698-0082	7	1	RESISTOR 464 1% .125W TF TC=0+-100	19701	SFR25H
A4A4R13	0698-3444	1	1	RESISTOR 316 1% .125W TF TC=0+-100	19701	SFR25H
A4A4R14	0698-3442	9	1	RESISTOR 237 1% .125W TF TC=0+-100	19701	SFR25H
A4A4R15	0757-0279	0	1	RESISTOR 3.16K +-1% .125W TF TC=0+-100	19701	SFR25H
A4A4R16*	0757-0200	7	1	RESISTOR 5.62K +-1% .125W TF TC=0+-100	19701	SFR25H
A4A4R17	0698-3156	2	1	RESISTOR 14.7K 1% .125W TF TC=0+-100	19701	SFR25H
A4A4R18	0698-3156	2	1	RESISTOR 14.7K 1% .125W TF TC=0+-100	19701	SFR25H
A4A4R19	0757-0280	3	1	RESISTOR 1K +-1% .125W TF TC=0+-100	19701	SFR25H
A4A4R20*	0757-0441	8	1	RESISTOR 8.251: +-1% .125W TF TC=0+-100	19701	SFR25H
A4A4R21	0757-0290	5	1	RESISTOR 6.19K +-1% .125W TF TC=0+-100	19701	SFR25H
A4A4R22	0757-0290	5	1	RESISTOR 6.19K +-1% .125W TF TC=0+-100	19701	SFR25H
A4A4R24	0698-3431	6	1	RESISTOR 23.7 1% .125W TF TC=0+-100	19701	SFR25H
A4A4R25	0757-0401	0	1	RESISTOR 100 +-1% .125W TF TC=0+-100	19701	SFR25H
A4A4R26	0757-0280	3	1	RESISTOR 1K +-1% .125W TF TC=0+-100	19701	SFR25H
A4A4R27	0698-3155	1	1	RESISTOR 4.641: 1% .125W TF TC=0+-100	19701	SFR25H
A4A4R28	0698-0082	7	1	RESISTOR 464 1% .125W TF TC=0+-100	19701	SFR25H
A4A4R29	0757-0443	0	1	RESISTOR 11K +-1% .125W TF TC=0+-100	19701	SFR25H
A4A4R30	0757-0438	3	1	RESISTOR 5.11K +-1% .125W TF TC=0+-100	19701	SFR25H
A4A4R31	0698-3441	8	1	RESISTOR 215 1% .125W TF TC=0+-100	19701	SFR25H
A4A4R32	0698-3444		1	RESISTOR 316 1% .125W TF TC=0+-100	19701	SFR25H
A4A4R33	0698-3442	9	1	RESISTOR 237 1% .125W TF TC=0+-100	19701	SFR25H
A4A4R34	0757-0279	0	1	RESISTOR 3.16K +-1% .125W TF TC=0+-100	19701	SFR25H
A4A4R35*	0757-0418	9	1	RESISTOR 619 +-1% .125W TF TC=0+-100	19701	SFR25H
A4A4R37	0757-0442	9	1	RESISTOR 10K +-1% .125W TF TC=0+-100	19701	SFR25H
A4A4R39	0757-0280	3	1	RESISTOR 1K +-1% .125W TF TC=0+-100	19701	SFR25H
A4A4R40*	0757-0441	8	1	RESISTOR 8.251: +-1% .125W TF TC=0+-100	19701	SFR25H
A4A4R41	0757-0290	5	1	RESISTOR 6.19K +-1% .125W TF TC=0+-100	19701	SFR25H
A4A4R42*	0698-8959	3	1	RESISTOR 619K +-1% .125W		
A4A4R43	2100-3163	8	1	RESISTOR-TRMR 1M 20% TKF SIDE-ADJ 17-TRN	73138	89PR1M
A4A4R44*	0757-0123	3	1	RESISTOR 34.8K +-1% .125W TF TC=0+-100	2M627	CRB14 OR CRB25
A4A4R45*	0757-0346	2	1	RESISTOR 10 +-1% .125W TF TC=0+-100	91637	CMF-55-1. T-1
A4A4R46	0757-0416	7	1	RESISTOR 511 +-1% .125W TF TC=0+-100	19701	SFR25H
A4A4R48	0757-0290	5	1	RESISTOR 6.19K +-1% .125W TF TC=0+-100	19701	SFR25H
A4A4R49	2100-3052	4	1	RESISTOR-TRMR 50 10% TKF SIDE-AOJ 17-TRN	73138	89PR50
A4A4R50	0757-0401	0	1	RESISTOR 100 +-1% .125W TF TC=0+-100	19701	SFR25H
A4A4R51	0757-0280	3	1	RESISTOR 1K +-1% .125W TF TC=0+-100	19701	SFR25H
A4A4R52	0698-3155	1	1	RESISTOR 4.641: 1% .125W TF TC=0+-100	19701	SFR25H
A4A4R53	0698-0082	7	1	RESISTOR 464 1% .125W TF TC=0+-100	19701	SFR25H
A4A4R54	0757-0443	0	1	RESISTOR 11K +-1% .125W TF TC=0+-100	19701	SFR25H
A4A4R55	0757-0438	3	1	RESISTOR 5.11K +-1% .125W TF TC=0+-100	19701	SFR25H
A4A4R56	0698-3441	8	1	RESISTOR 215 1% .125W TF TC=0+-100	19701	SFR25H
A4A4R57	0698-3444	1	1	RESISTOR 316 1% .125W TF TC=0+-100	19701	SFR25H
A4A4R58	0698-3442	9		RESISTOR 237 1% .125W TF TC=0+-100	19701	SFR25H
A4A4R59	0757-0279	0		RESISTOR 3.16K +-1% .125W TF TC=0+-100	19701	SFR25H
A4A4R60*	0757-0200	7	1	RESISTOR 5.62K +-1% .125W TF TC=0+-100	19701	SFR25H

**Indicates factory-selected value*

HP Part Number 85662-60189

A4A4 Bandwidth Filter

Reference Designatior	HP Part Number	C D	Qty	Description	Mfr Code	Mfr Part Number
A4A4R61	0698-3156		1	RESISTOR 14.7K 1% .125W TF TC=0+-100	19701	SFR25H
A4A4R62	0698-3156	,	1	RESISTOR 14.7K 1% .125W TF TC=0+-100	19701	SFR25H
A4A4R63	0757-0280		1	RESISTOR 1K +-1% .125W TF TC=0+-100	19701	SFR25H
A4A4R64*	0757-0288		1	RESISTOR 9.09K +-1% .125W TF TC=0+-101	19701	SFR25H
A4A4R65*	0757-0317	/	1	RESISTOR 1.33K +-1% .125W TF TC=0+-10(	19701	SFR25H
A4A4R66	0757-0290	*	1	RESISTOR 6.19K +-1% .125W TF TC=0+-10(	19701	SFR25H
A4A4R67	0757-0290	I	1	RESISTOR 6.19K +-1% .125W TF TC=0+-10(	19701	SFR25H
A4A4R68	0757-0417	8	1	RESISTOR 562 +-1% .125W TF TC=0+-100	19701	SFR25H
A4A4R70	0698-3440	7	1	RESISTOR 196 1% .125W TF TC=0+-100	19701	SFR25H
A4A4R72	0698-3438	3	1	RESISTOR 147 1% .125W TF TC=0+-100	19701	SFR25H
A4A4R73	0698-0082	7	1	RESISTOR 464 1% .125W TF TC=0+-100	19701	SFR25H
A4A4R74	0757-0438	.	1	RESISTOR 5.11K +-1% .125W TF TC=0+-10(	19701	SFR25H
A4A4R75	0757-0438	.	1	RESISTOR 5.11K +-1% .125W TF TC=0+-10(	19701	SFR25H
A4A4R76	0757-0438	.	1	RESISTOR 5.11K +-1% .125W TF TC=0+-10(	19701	SFR25H
A4A4R82	0757-0401	C	1	RESISTOR 100 +-1% .125W TF TC=D+-100	19701	SFR25H
A4A4R83	0757-0442	C	1	RESISTOR 10K +-1% .125W TF TC=0+-100	19701	SFR25H
A4A4R84	0757-0442	C	1	RESISTOR 10K +-1% .125W TF TC=0+-100	19701	SFR25H
A4A4R85	0757-0442	C	1	RESISTOR 10K +-1% .125W TF TC=0+-100	19701	SFR25H
A4A4R88	0698-3154	C	1	RESISTOR 4.221: 1% .125W TF TC=0+-100	19701	SFR25H
A4A4R89	0698-3154	C	1	RESISTOR 4.22K 1% .125W TF TC=0+-100	19701	SFR25H
A4A4R90	0698-3154	C	1	RESISTOR 4.22K 1% .125W TF TC=0+-100	19701	SFR25H
A4A4R91	0757-0180	2	1	RESISTOR 31.6 +-1% .125W TF TC=0+-100	19701	SFR25H
A4A4R92	0757-0180	2	1	RESISTOR 31.6 +-1% .125W TF TC=0+-100	19701	SFR25H
A4A4R93	0757-0180	2	1	RESISTOR 31.6 +-1% .125W TF TC=0+-100	19701	SFR25H
A4A4R94*	0757-0465	8	1	RESISTOR 100K +-1% .125W TF TC=0+-100	19701	SFR25H
A4A4R95	0757-0465	.	1	RESISTOR 100K +-1% .125W TF TC=0+-100	19701	SFR25H
A4A4R96	3757-0420	3	1	RESISTOR 750 +-1% .125W TF TC=0+-100	19701	SFR25H
A4A4TP1	0360-1788	7	1	CONNECTOR-SGL CONT PIN .045-IN-BSC-SZ SQ	04574	
A4A4TP2	0360-1788	7	1	CONNECTOR-SGL CONT PIN .045-IN-BSC-SZ SQ	04574	
A4A4TP3	1251-0600	0	1	CONNECTOR-SGL CONT PIN 1.14-MM-BSC-SZ SQ	27264	16-06-0034
A4A4TP4	0360-1788	7	1	CONNECTOR-SGL CONT PIN .045-IN-BSC-SZ SQ	04574	
A4A4TP5	0360-1788	7	1	CONNECTOR-SGL CONT PIN .045-IN-BSC-SZ	04574	
A4A4TP6	0360-1788	7	1	CONNECTOR-SGL CONT PIN .045-IN-BSC-SZ SQ	04574	
A4A4TP7	0360-1788	7	1	CONNECTOR-SGL CONT PIN .045-IN-BSC-SZ	04574	
A4A4TP8	1251-0600	0	1	CONNECTOR-SGL CONT PIN 1.14-MM-BSC-SZ	27264	16-06-0034
A4A4VR1	1902-0048	1	1	DIODE-ZNR 6.81V 5% DO-35 PD=.4W	04713	
A4A4Y1	0410-1029	5	1	CRYSTAL. QUARTZ, PART OF A MATCHED SET SIX. INCLUDES A4A4Y1-3, A4A6A1Y1, AND A4A8Y1-2		
\4A4Y2				:RYSTAL, QUARTZ, PART OF A MATCHED SET :IX, INCLUDES A4A4Y1-3, A4A6A1Y1, AND \4A8Y1-2 (REFER TO A4A4Y1)		
\4A4Y3				:RYSTAL, QUARTZ, PART OF A MATCHED SET :IX, INCLUDES A4A4Y1-3, A4A6A1Y1, AND \4A8Y1-2 (REFER TO A4A4Y1)		

**Indicates factory-selected value*

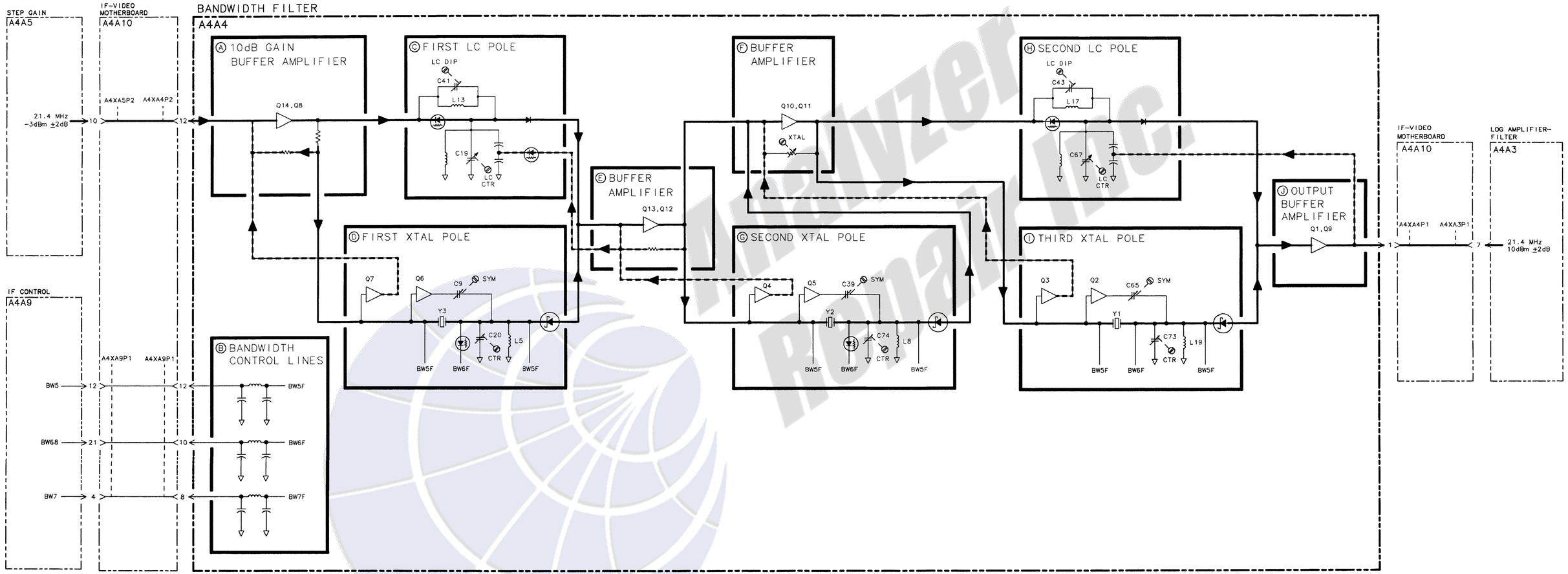

A4A4 BANDWIDTH FILTER, BLOCK DIAGRAM

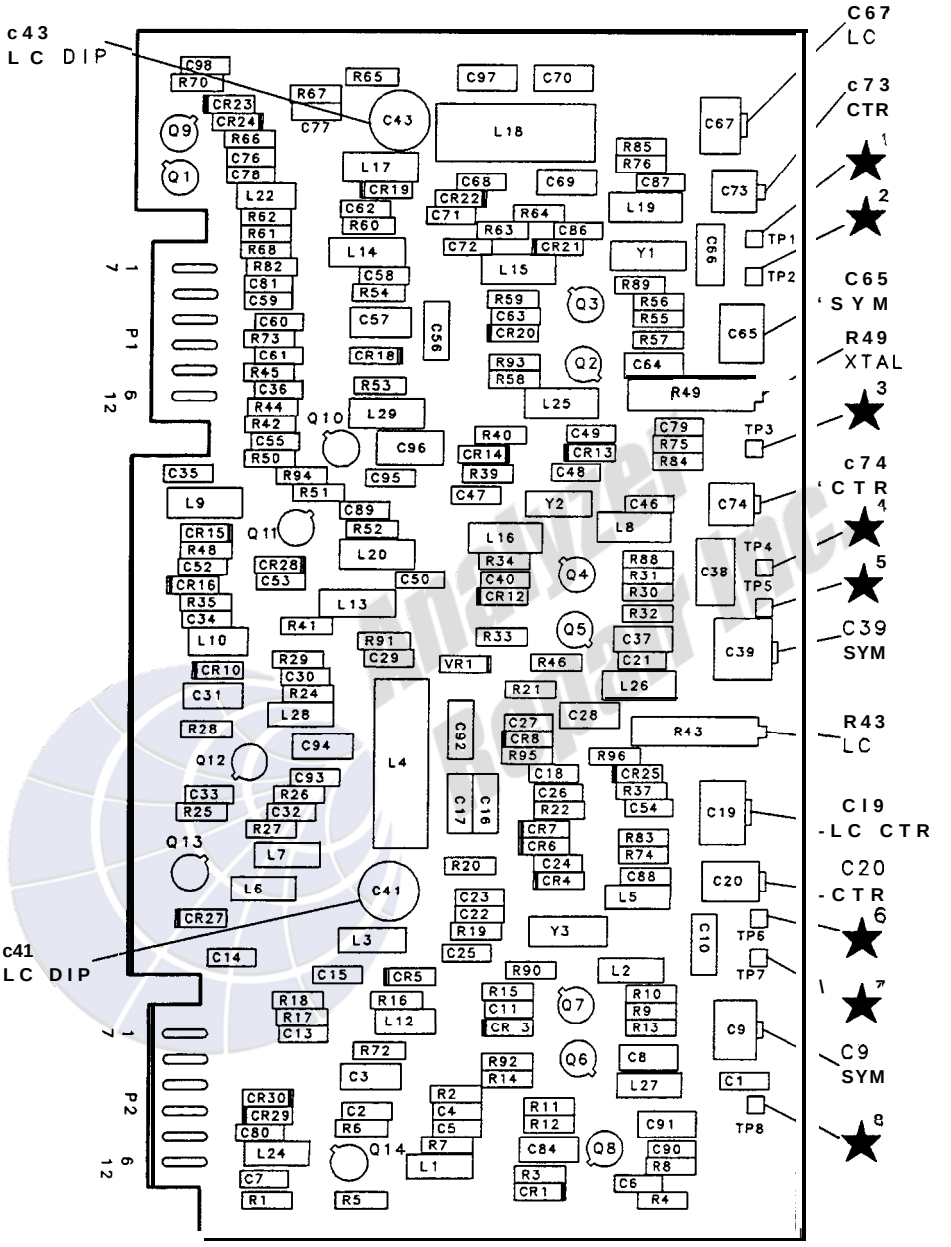

A4A4 Bandwidth Filter Component Locations, 85662-60142

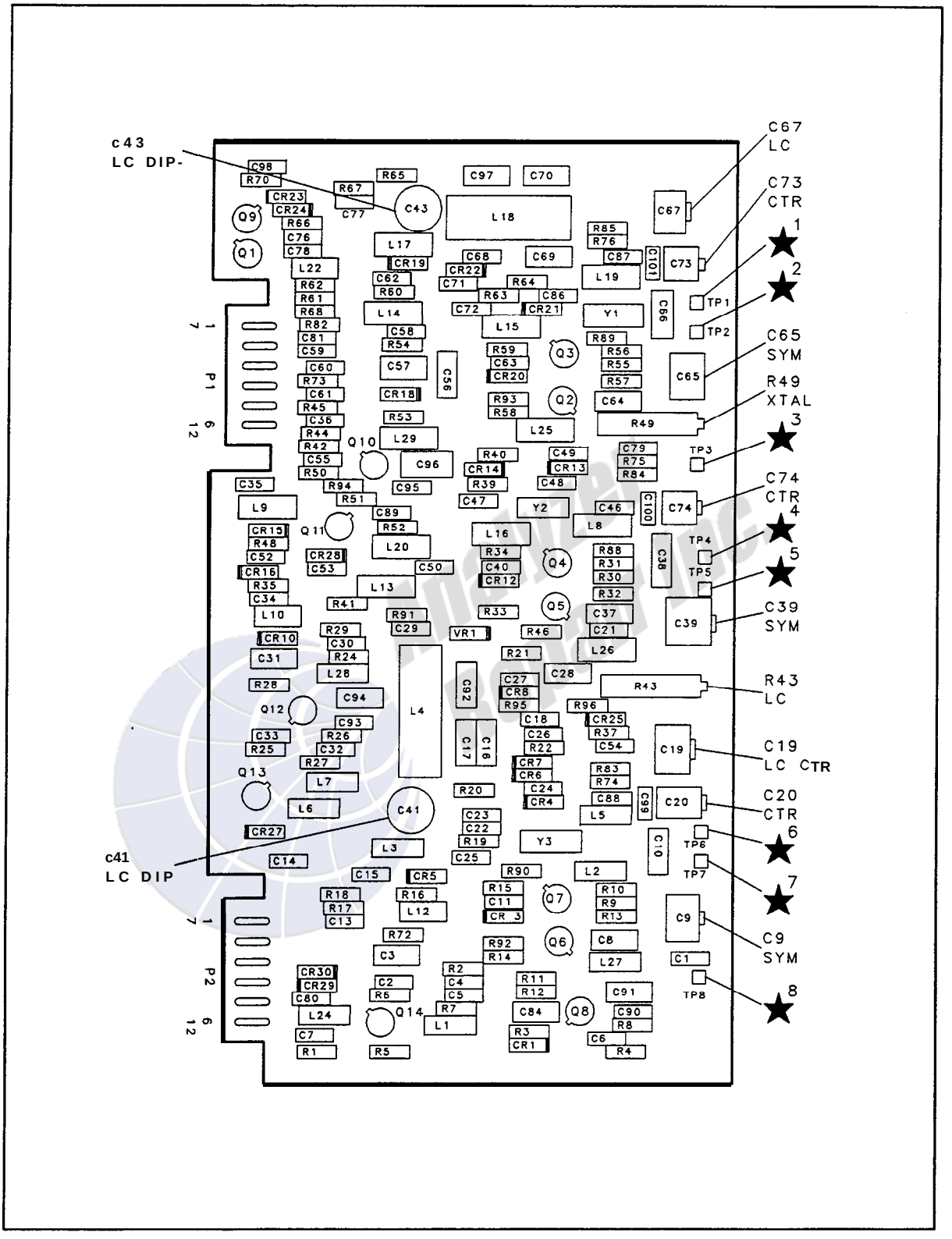

A4A4 Bandwidth Filter Component Locations, 85662-60189

A4A4 BANDWIDTH FILTER
85662-60142
(SERIAL PREFIXES: 2403A – 2648A)

P1

PIN	SIGNAL	TO/FROM	FUNCTION BLOCK
1	21.4 MHz	A4A3,P1-7	J
7	GND		K
2	GND		K
8	BW7	A4A9,P1-4	B
3	GND		K
9	GND		K
4	GND		K
10	BW6B	A4A9,P1-21	B
5	GND		K
11	+10V	A4A5,P1-5	K
6	GND		K
12	BW5	A4A9,P1-12	B

P2

PIN	SIGNAL	TO/FROM	FUNCTION BLOCK
1	GND		K
7	GND		K
2	GND		K
8	GND		K
3	GND		K
9	GND		K
4	-15V		K
10	GND		K
5	+15V		K
11	+15V		K
6	GND		K
12	21.4 MHz	A4A5,P2-10	A

Ⓐ 10 dB GAIN BUFFER AMPLIFIER

Ⓑ BANDWIDTH CONTROL LINES (SEE NOTE 4)

Ⓒ FIRST LC POLE

Ⓓ FIRST XTAL POLE

Ⓔ BUFFER AMPLIFIER

Ⓕ BUFFER AMPLIFIER

Ⓖ SECOND XTAL POLE

Ⓗ SECOND LC POLE

Ⓘ THIRD XTAL POLE

Ⓙ OUTPUT BUFFER AMPLIFIER

Ⓚ POWER SUPPLIES

SEE NOTE 8 FOR RANGE OF VALUES FOR FACTORY-SELECTED COMPONENTS.

NOTES:

1. REFERENCE DESIGNATORS WITHIN THIS ASSEMBLY ARE ABBREVIATED. FOR COMPLETE REFERENCE DESIGNATION, PREFIX ABBREVIATION WITH ASSEMBLY DESIGNATION.
2. UNLESS OTHERWISE INDICATED: RESISTANCE IS IN OHMS (Ω). CAPACITANCE IS IN MICROFARADS (μF) INDUCTANCE IS IN NANOHENRIES (nH).
3. ASTERISK (*) DENOTES A FACTORY SELECTED COMPONENT; TYPICAL VALUE IS SHOWN. REFER TO NOTE 8 FOR RANGE OF VALUES.
4. MNEMONIC TABLE:

MNEMONIC	DESCRIPTION
BW5	BANDWIDTH 5
BW7	BANDWIDTH 7 (LC MODE)
BW6B	BANDWIDTH 6B (XTAL MODE)

5. UNLESS OTHERWISE NOTED, INSTRUMENT SETTINGS ARE AS FOLLOWS:

INSTRUMENT PRESET	
CENTER FREQUENCY	CAL. OUT FREQ
FREQUENCY SPAN	0 Hz
ATTENUATION	0 dB
RESOLUTION BANDWIDTH	3 kHz

6. TABLE OF RESOLUTION BANDWIDTH CONTROL LINE VOLTAGES.

RESOLUTION BANDWIDTH	TYPICAL VALUES		
	BW5	BW6B	BW7
3 MHz	+14.8	-14.0	+ 9.7
1 MHz	+14.8	-14.0	+13.1
300 kHz	+14.8	-14.0	+14.1
100 kHz	+14.8	-14.0	+14.0
30 kHz	-.6	+14.3	+14.3
10 kHz	-.6	+9.3	+14.3
3 kHz	-.6	+9.0	+14.3
1 kHz AND NARROWER	-.6	+9.2	+14.3

7. UNLESS OTHERWISE INDICATED: SIGNALS ENTER AT LEFT SIDE AND EXIT AT RIGHT SIDE OF FUNCTION BLOCKS.
8. THE COMPONENTS LISTED BELOW ARE FACTORY-SELECTED COMPONENTS. THE RANGE OF ACCEPTABLE VALUES FOR EACH FACTORY-SELECTED COMPONENT IS ALSO LISTED.

COMPONENT	ACCEPTABLE VALUES
C12*	1.0pF – 8.2pF
C13*	180pF – 2700pF
C38*	1.0pF – 8.2pF
C66*	1.0pF – 8.2pF
C70*	180pF – 2700pF
R3*	0Ω – 9.09Ω
R16*	3160Ω – 82500Ω
R20*	6.19KΩ – 12.1KΩ
A36*	383Ω – 828Ω
R40*	6.19KΩ – 12.1KΩ
R43*	1KΩ – 100KΩ
R44*	1KΩ – OPEN
R45*	100Ω – 100Ω
R60*	3160Ω – 82500Ω
R64*	6.19KΩ – 12.1KΩ
R65*	909Ω – 27.30Ω
R84*	100KΩ – 1MΩ

A4A4 BANDWIDTH FILTER
85662-60189
(SERIAL PREFIX: 2810A)

P1

PIN	SIGNAL	TO/FROM	FUNCTION BLOCK
1	21.4 MHz	A4A3,P1-7	J
7	GND		K
2 8	GND BW7	A4A9,P1-4	K B
3 9	GND		K K
4 10	GND BW8B	A4A9,P1-21	K B
5 11	GND +10VF	A4A5,P1-5	K K
6 12	GND BW5	A4A9,P1-12	K B

P2

PIN	SIGNAL	TO/FROM	FUNCTION BLOCK
1 7	GND GND		K K
2 8	GND GND		K K
3 9	GND GND		K K
4 10	-15V GND		K K
5 11	+15V +15V		K K
6 12	GND 21.4 MHz	A4A5,P2-10	K A

Ⓐ 10 dB GAIN BUFFER AMPLIFIER

Ⓑ BANDWIDTH CONTROL LINES
(SEE NOTE 4)

Ⓒ FIRST LC POLE

Ⓓ FIRST XTAL POLE

Ⓔ BUFFER AMPLIFIER

Ⓕ BUFFER AMPLIFIER

Ⓖ SECOND XTAL POLE

Ⓗ SECOND LC POLE

Ⓘ THIRD XTAL POLE

Ⓙ OUTPUT BUFFER AMPLIFIER

Ⓚ POWER SUPPLIES

SEE NOTE 8 FOR RANGE OF VALUES FOR FACTORY-SELECTED COMPONENTS.

NOTES:

1. REFERENCE DESIGNATORS WITHIN THIS ASSEMBLY ARE ABBREVIATED. FOR COMPLETE REFERENCE DESIGNATION,PREFIX ABBREVIATION WITH ASSEMBLY DESIGNATION.
2. UNLESS OTHERWISE INDICATED: RESISTANCE IS IN OHMS (Ω) CAPACITANCE IS IN MICROFARADS(μF) INDUCTANCE IS IN MICROHENRIES(μH)
3. ASTERISK (*) DENOTES A FACTORY SELECTED COMPONENT. TYPICAL VALUE IS SHOWN. REFER TO NOTE 8 FOR RANGE OF VALUES.
4. MNEMONIC TABLE:

MNEMONIC	DESCRIPTION
BW5	BANDWIDTH 5
BW7	BANDWIDTH 7 (LC MODE)
BW8B	BANDWIDTH 8B (XTAL MODE)

5. UNLESS OTHERWISE NOTED, INSTRUMENT SETTINGS ARE AS FOLLOWS:

INSTRUMENT PRESET	
CENTER FREQUENCY	CAL. OUT FREQ
FREQUENCY SPAN	0 Hz
ATTENUATION	0 dB
RESOLUTION BANDWIDTH	3 kHz

6. TABLE OF RESOLUTION BANDWIDTH CONTROL LINE VOLTAGES.

RESOLUTION BANDWIDTH	TYPICAL VALUES		
	BW5	BW8B	BW7
3 kHz	+14.8	-14.0	+9.7
1 kHz	+14.8	-14.0	+13.1
300 kHz	+14.8	-14.0	+14.1
100 kHz	+14.8	-14.0	+14.5
30 kHz	-.6	+14.3	+14.3
10 kHz	-.6	+9.3	+14.3
3 kHz	-.6	+9.0	+14.3
1 kHz AND NARROWER	-.6	+9.2	+14.3

7. UNLESS OTHERWISE INDICATED: SIGNALS ENTER AT LEFT SIDE AND EXIT AT RIGHT SIDE OF FUNCTION BLOCKS.
8. THE COMPONENTS LISTED BELOW ARE FACTORY-SELECTED COMPONENTS. THE RANGE OF ACCEPTABLE VALUES FOR EACH FACTORY-SELECTED COMPONENT IS ALSO LISTED.

COMPONENT	ACCEPTABLE VALUES
C10*	1.0pF – 8.2pF
C17*	180pF – 270pF
C38*	1.0pF – 8.2pF
C58*	1.0pF – 8.2pF
C65*	1.0pF – 8.2pF
C97*	180pF – 270pF
R3*	0Ω – 9.09Ω
R16*	316Ω – 8250Ω
R20*	6.19kΩ – 12.1kΩ
R35*	383Ω – 826Ω
R36*	6.19kΩ – 12.1kΩ
R42*	1kΩ – OPEN
R44*	1kΩ – OPEN
R45*	0Ω – 100Ω
R60*	316Ω – 8250Ω
R64*	6.19kΩ – 12.1kΩ
R65*	909Ω – 2730Ω
R84*	100kΩ – 1MΩ

A4A4

A4A4 BANDWIDTH FILTER, SCHEMATIC DIAGRAM

A4A5

A4A5 Step Gain, Circuit Description

A4A5 Step Gain has three functions. It provides 65.9 dB of gain in discrete 0.1 dB steps (from -15.9 dB to +50 dB); it develops a nominal +10 V bias supply; and it provides the 18.4 MHz LO frequency to A4A6A1 Up Converter and A4A6A2 Down Converter.

Step Gain 10 dB + Calibration ©

This circuit is configured as a non-inverting operational amplifier. It provides a minimum of about 2 dB gain (adjustable by CAL potentiometer R33) and a maximum of about 12 dB (adjustable by 10 dB potentiometer R32). (See Figure 1.) The PIN diode CR5 functions as a variable resistor that has about 1 K resistance at minimum and 70Ω of resistance at maximum gain. When the SG10 line is not sinking current (SG10 is off), the PIN resistance is controlled only by R33. When the SG10 line is grounded (SG10 is on), the gain is controlled primarily by R32. If the CAL potentiometer is adjusted, R32 must be adjusted also.

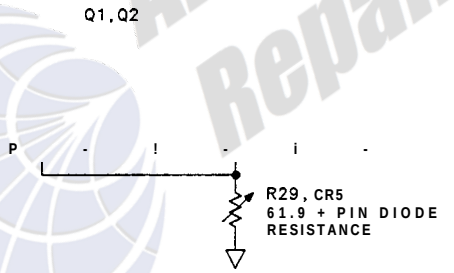

Figure 1. Step Gain 10 dB + Calibration, Equivalent Circuit

Step Gain 20 dB-1 Ⓓ
Step Gain 20 dB-2 Ⓔ

This circuit is similar to the Step Gain 10 dB + Calibration circuit, except that the gain range is from 0 dB to 20 dB. PIN diode CR6 functions as both a switch and as a variable resistor. When the SG20-1 line is low, CR6 is turned on by current adjustable by 20 dB-1 potentiometer R44. More current through the PIN causes the PIN to have a lower resistance and the amplifier to have more gain. The Step Gain 20 dB-2 circuit is identical in operation to the Step Gain 20 dB-1 circuit.

Anaheit Repair Inc.

A0.0—A15.9 dB Attenuators Ⓕ

These attenuators normally operate over the range of 0.0 dB to 9.9 dB except in the Error Correction function [SHIFT] [FREQUENCY SPAN], when they operate over the whole range of 0.0 dB to 15.9 dB. The first three attenuation stages, A8dB, A4dB, and A2dB, are emitter followers with a resistor divider on the output of each one. The dividers are switched in and out with diodes CR8, CR9, and CR10 to yield discrete steps of attenuation. The last attenuator is variable. Its range is adjusted by VR potentiometer R51. R51 sets the emitter voltage of Q16, which in turn determines how much current is sunk through PIN diode CR11 when resistors are switched in A4A9 IF Control. (See Figure 2.)

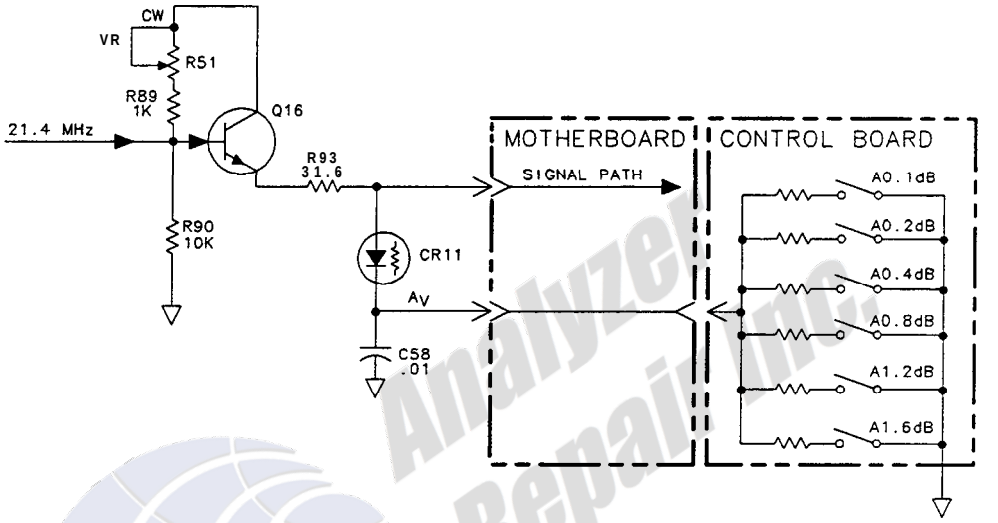

Figure 2. A0.0 to A15.9 dB Attenuators, Simplified Schematic

Analyzer Repair Inc.

+10 V Temperature Compensating Power Supply ©

This supply compensates for the effect of temperature on PIN diodes used on the A4A5, A4A4, and A4A8 assemblies. (See Figure 3.) Its nominal voltage is +10 V and its nominal temperature coefficient is +35 mV/°C. The output voltage is derived from the following equation:

$$
\begin{aligned}
V_o &= V_{R4} + V_{fb} \\
&= (I_{R4})(R_4) + V_{fb} \\
&= \left(\frac{V_{Rs}}{R_s}\right)(R_4) + V_{fb} \\
&\approx \left[\frac{(V_{fb} - V_{CR2})}{R_s}\right](R_4) + V_{fb}
\end{aligned}
$$

where: $V_{fb} \approx 3$ V (the voltage applied across CR2, CR3, CR4, and R5 at U1 pin 2) and is equal to the input voltage.

Using circuit values:

$$
\begin{aligned}
&\approx \left[\frac{3V - 1.8V}{9.09\ K}\right](51.1K) + 3V \\
&\approx 9.75V
\end{aligned}
$$

As temperature changes, the voltage drop across CR2, CR3, and CR4 changes. This results in a change in the current through the feedback resistor R4. Since $V_{out} = V_{fb} + V_{R4}$, the voltage developed across R4 changes the output of the supply. The change in V_{out} is directly proportional to the change in current through R4.

$$\Delta V_{out} = (\Delta I_{R4})(R_4)$$

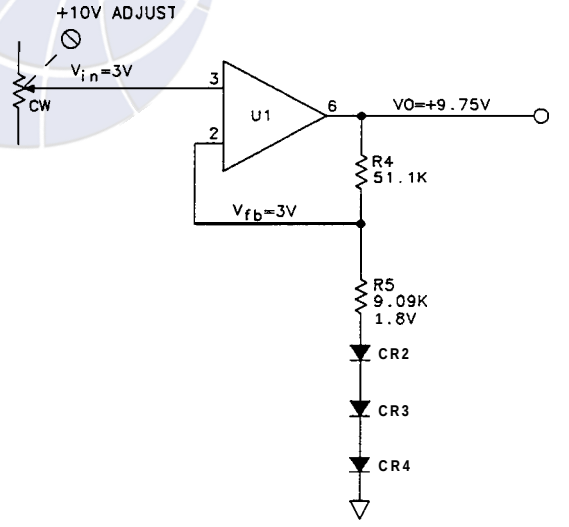

Figure 3. +10 V Temperature-Compensating Power Supply, Simplified Schematic

Analyzer Repair Inc.

18.4 MHz Oscillator Ⓐ

The 18.4 MHz Oscillator is basically a Colpitts oscillator with a crystal Y1 in the feedback path. A simplified schematic is shown in Figure 4.

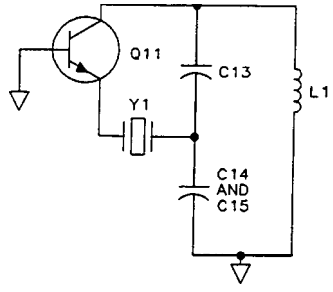

Figure 4. 18.4 MHz Oscillator, Equivalent Circuit

If the crystal were replaced with a large capacitor, the circuit would oscillate at the resonant frequency of the parallel resonant circuit made up of L1, C13, C14, and C15. When the crystal is inserted, the feedback path is broken except at the series resonance of the crystal (18.4 MHz). The parallel combination of varactor CR1, temperature-compensating capacitor C7, and FREQ ZERO COARSE air-variable capacitor Cl0 are in series with the crystal and can pull it several kHz either side of 18.4 MHz.

The voltage output is determined by the current through R10* times the collector load. If the output is too low, R10* can be decreased in size.

The collector voltage is divided by C13, C14, and Cl5 and goes to the Buffer Amplifiers. The division ratio is:

$$\frac{\frac{1}{C_{15}}}{\frac{1}{C_{13}}+\frac{1}{C_{14}}+\frac{1}{C_{15}}} \approx 0.13$$

Buffer Amplifiers Ⓑ

The Buffer Amplifiers are two almost identical amplifier circuits. The top amplifier on the schematic (Q10, Q8) provides the 18.4 MHz LO signal to A4A6A1 Up Converter, while the bottom amplifier (Q12, Q13) provides the signal to A4A6A2 Down Converter.

A4A5 Step Gain, Troubleshooting

Operation of the Step Gains and A0.0 to A15.9 Attenuator can be determined from the display by several easy tests.

The Step Gains are checked in the following way. Connect a 10 dB step attenuator between CAL OUTPUT and the input to the analyzer. Set this attenuator to 90 dB, press Instrument Preset, and key in the following:

[CENTER FREQUENCY] ..... equal to the CAL OUTPUT frequency
[FREQUENCY SPAN] ..... 0 Hz
[RES BW] ..... 1 kHz
[ATTEN] ..... 0 dB
[VIDEO BW] ..... 10 Hz
(SWEEP) ..... 20 s
[REFERENCE LEVEL] ..... -10 dBm

Press the [SINGLE] sweep key and press the DATA STEP [⇩] key to display each step. Figure 5 should be displayed. If one or more of the steps is missing, refer to Note 8 for the Step Gain truth table to determine which stage is faulty. 0 V in the table indicates that a control line is active.

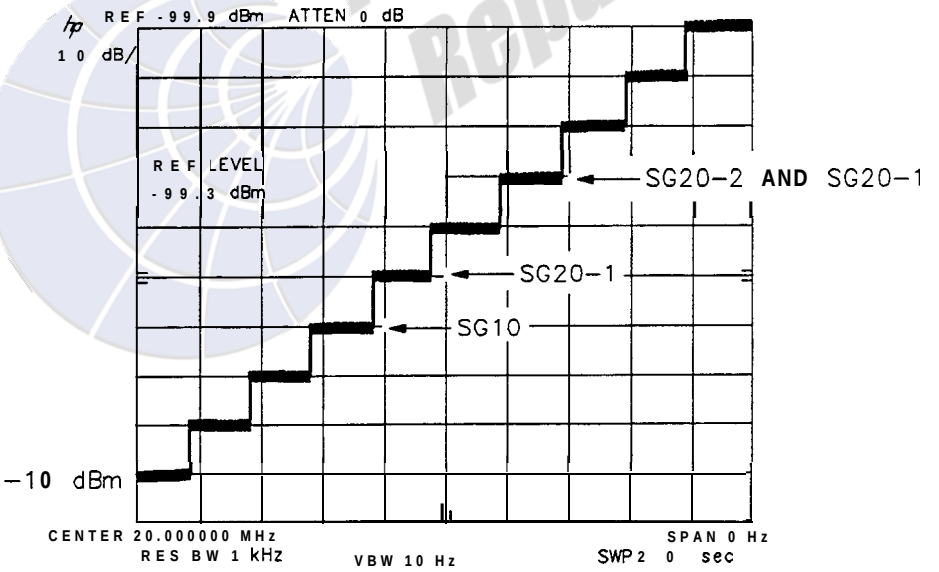

NOTE: Center Frequency readout will be 100.000 000 MHz for an HP8566B

Figure 5. 10 dB Step Gain Test

If a component has been replaced, a simple calibration/diagnostic program exists. The calibration routine is started by connecting a cable from CAL OUTPUT to the input of the analyzer and then pressing [SHIFT] [FREQUENCY SPAN]. When this program has finished, press [SHIFT] [LINE] TRIGGER which will list the calibration data. (Refer to Figure 6). Lines 19

through 26 give the step gain errors. Acceptable error is ±1 dB. Locations of the correction data are given in Table l-l.

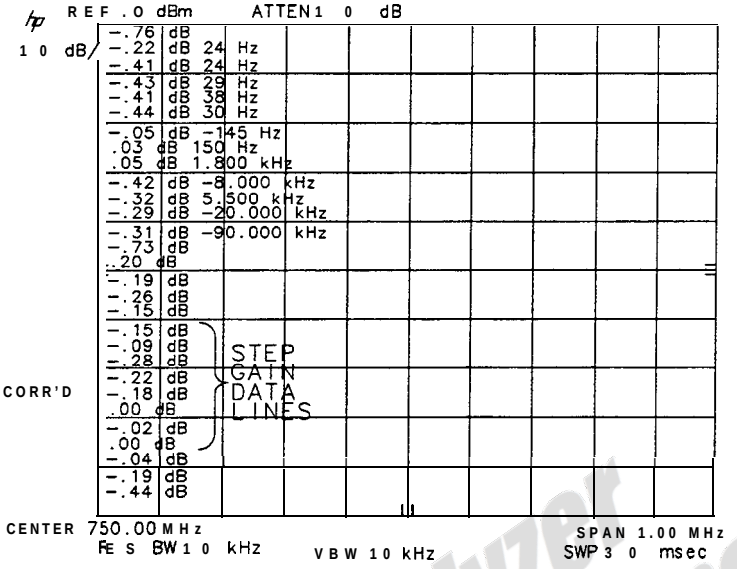

Figure 6. Error Correction Routine Data

Table 1. Locations of Step Gain Calibration Data

Reference Level (dBm)	-10	-20	-30	-40	-50	-60	−70	≤−80
Step Gain Control Line	A20 dB (A4A8 assembly)	A10 dB (A4A8 assembly)		SG10	SG20-1	SG10 SG20-1	SG20-1 SG20-2	SG10 SG20-1 SG20-2
Calibration Line	26	25	24	23	22	21	20	19

The A2dB, A4dB, and A8dB circuitry of the A0.0 to A15.9 Attenuator is activated by the following routine. First, connect a 1 dB step attenuator between CAL OUTPUT and the input to the analyzer. Set this attenuator to 10 dB, press Instrument Preset, and key in the following:

CENTER FREQUENCY ..... equal to the CAL OUTPUT frequency

FREQUENCY SPAN ..... 0 Hz

LOG SCALE ENTER dB/DIV ..... 1 dB

SWEEP TIME ..... 20 s

REFERENCE LEVEL ..... -10 dBm

Press SINGLE sweep and repeatedly press the DATA STEP ⇩ key. The display should appear as in Figure 7. If every other step is missing, the AVdB control line is faulty. Check the A1dB circuitry on the A4A9 IF Control board to find the defective component. If

only a few steps are missing, refer to the control line truth tables (Tables 1 and 2 in A4A9 Troubleshooting) to determine which function is not operating properly. 0 V in the table indicates that a line is active.

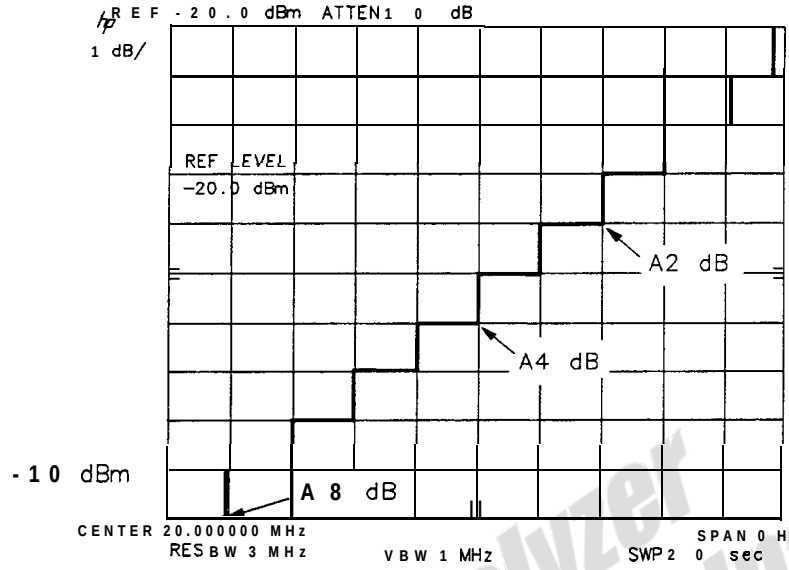

NOTE: Center Frequency readout will be 100.000 000 MHz for an HP8566B

Figure 7. 1 dB Step Gain Test

Often several steps will appear to be slightly in error. Analysis of the truth table (A4A9 Tables 1 and 2) will indicate that no single stage could be faulty. This is caused by log fidelity error in the log amplifier circuitry. If accurate determination of the step size is necessary, IF substitution using a calibrated 1 dB step attenuator will be required.

Operation of the AVdB control line and the 0.1 to 1.9 dB section of the A0.0 to A15dB Attenuator on A4A9 IF Control can be tested with the following method. Press Instrument Preset and key in the following:

[CENTER FREQUENCY] ..... equal to the CAL OUTPUT frequency

[FREQUENCY SPAN] ..... 0 Hz

LIN SCALE

[▲]

[SHIFT] [AUTO] (KSA)

[SWEEP TIME] ..... 20 s

[VIDEO BW] ..... 3 kHz

[REFERENCE LEVEL] ..... -8 dBm

Press the [SINGLE] sweep key and rotate the DATA control knob in a counterclockwise direction. A stepped display similar to Figure 8 should result. If the steps are not monotonic, the circuitry is faulty. The AVdB control line voltage for a -10 dBm Reference Level will vary widely among instruments, although the ratio between the voltage for -11.9 dBm and -10

dBm will remain constant. During the above test, the voltage should vary approximately 8.5% from -10 dBm to -11.9 dBm.

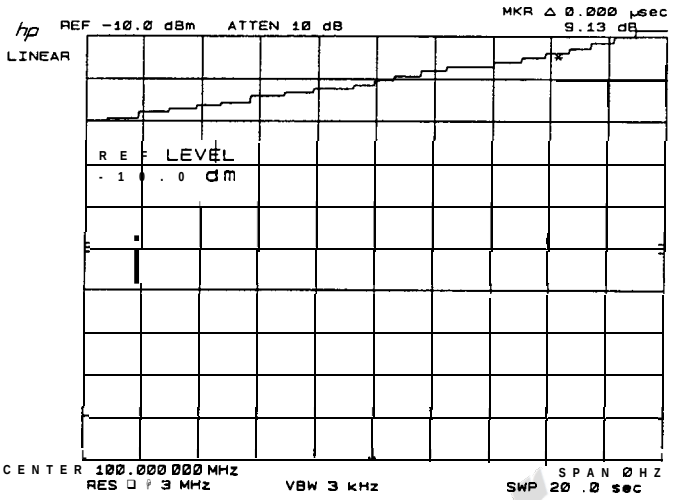

Note

Center Frequency readout will be 20.000 000 MHz for an HP 8568B/HP 8567A.

Figure 8. 0.1 dB Step Gain Test

The absolute step amplitudes can be determined with the MARKER A function. The reference steps are 0.00 dB, 0.90 dB, and 1.90 dB. In the Linear mode, the error should be less than f0.12 dB. If these steps are not correct, or the display is not monotonic, refer to A4A9 IF Control Section for more troubleshooting information.

Analyzer Repair Inc.

HP Part Number 85662-60139

A4A5 Step Gain

Reference Designation	HP Part Number	C D	Qty	Description	Mfr Code	Mfr Part Number
A4A5	85662-60139	6	1	BOARD ASSEMBLY, STEP GAIN	28480	85662-60139
A4A5C1	0160-4833	5	1	CAPACITOR-FXD .022UF +-10% 100VDC CER	04222	SA201C223KAAH
A4A5C3	0160-4832	4	1	CAPACITOR-FXD .01UF +-10% 100VDC CER	04222	SA101C103KAAH
A4A5C4	0180-0197	8	1	CAPACITOR-FXD 2.2UF+-10% 20VDC TA	56289	150D225X9020A2-DYS
A4A5C5	0160-4832	4	1	CAPACITOR-FXD .01UF +-10% 100VDC CER	04222	SA101C103KAAH
A4A5C8	0160-4832	4	1	CAPACITOR-FXD .01UF +-10% 100VDC CER	04222	SA101C103KAAH
A4A5C9*	0160-2251	7	1	CAPACITOR-FXD 5.6pF 500 V	52763	
A4A5C10	0121-0493	3	1	CAPACITOR-V TRMR-AIR 1.7-11PF 175V PC-MT	74970	187-0306-125
A4A5C11	0160-0127	2	1	CAPACITOR-FXD 1uF 50 V	04222	SR835E105MAAH
A4A5C13	0160-0334	3	1	CAPACITOR-FXD 47PF +-.5PF 300VDC MICA -2	09023	CD15ED470D03
A4A5C14	0160-2209	5	1	CAPACITOR-FXD 360PF +-5% 300VDC MICA 0+7	09023	CD15FD361J03
A4A5C15	0160-3538	5	1	CAPACITOR-FXD 750PF +-5% 100VDC MICA 0+7	09023	RDM15F751J1C
A4A5C17	0160-4832	4	1	CAPACITOR-FXD .01UF +-10% 100VDC CER	04222	SA101C103KAAH
A4A5C18	0160-4832	4	1	CAPACITOR-FXD .01UF +-10% 100VDC CER	04222	SA101C103KAAH
A4A5C19	0160-4832	4	1	CAPACITOR-FXD .01UF +-10% IOOVDC CER	04222	SA101C103KAAH
A4A5C20	0160-4832	4	1	CAPACITOR-FXD .01UF +-10% 100VDC CER	04222	SA101C103KAAH
A4A5C21	0160-4832	4	1	CAPACITOR-FXD .01UF +-10% IOOVDC CER	04222	SA101C103KAAH
A4A5C22	0160-4832	4	1	CAPACITOR-FXD .01UF +-10% IOOVDC CER	04222	SA101C103KAAH
A4A5C23	0160-4832	4	1	CAPACITOR-FXD .01UF +-10% IOOVDC CER	04222	SA101C103KAAH
A4A5C24	0160-4832	4	1	CAPACITOR-FXD .01UF +-10% 100VDC CER	04222	SA201C223KAAH
A4A5C25	0160-4833	5	1	CAPACITOR-FXD .022UF +-10% 100VDC CER	04222	SA201C223KAAH
A4A5C26	0160-4832	4	1	CAPACITOR-FXD .01UF +-10% 100VDC CER	04222	SA101C103KAAH
A4A5C27	0160-4832	4	1	CAPACITOR-FXD .01UF +-10% 100VDC CER	04222	SA101C103KAAH
A4A5C28	0160-4832	4	1	CAPACITOR-FXD .01UF +-10% 100VDC CER	04222	SA101C103KAAH
A4A5C29	0160-4832	4	1	CAPACITOR-FXD .01UF +-10% 100VDC CER	04222	SA101C103KAAH
A4A5C31	0160-4832	4	1	CAPACITOR-FXD .01UF +-10% 100VDC CER	04222	SA101C103KAAH
A4A5C32	0160-2252	8	1	CAPACITOR-FXD 6.2pF 500 V	52763	
A4A5C33	0160-4832	4	1	CAPACITOR-FXD .01UF +-10% 100VDC CER	04222	SA101C103KAAH
A4A5C34	0160-4832	4	1	CAPACITOR-FXD .01UF +-10% 100VDC CER	04222	SA101C103KAAH
A4A5C35	0160-4832	4	1	CAPACITOR-FXO .01UF +-10% 100VDC CER	04222	SA101C103KAAH
A4A5C36	0160-4832	4	1	CAPACITOR-FXD .01UF +-10% 100VDC CER	04222	SA101C103KAAH
A4A5C37	0160-2244	8	1	CAPACITOR-FXD 3pF 500 V	52763	
A4A5C38	0160-4832	4	1	CAPACITOR-FXD .01UF +-10% 100VDC CER	04222	SA101C103KAAH
A4A5C39	0160-4832	4	1	CAPACITOR-FXD .01UF +-10% 100VDC CER	04222	SA101C103KAAH
A4A5C40	0160-4832	4	1	CAPACITOR-FXD .01UF +-10% 100VDC CER	04222	SA101C103KAAH
A4A5C41	0160-4832	4	1	CAPACITOR-FXD .01UF +-10% 100VDC CER	04222	SA101C103KAAH
A4A5C42	0160-4832	4	1	CAPACITOR-FXO .01UF +-10% 100VDC CER	04222	SA101C103KAAH
A4A5C44	0160-4832	4	1	CAPACITOR-FXD .01UF +-10% 100VDC CER	04222	SA101C103KAAH
A4A5C45	0160-2244	8	1	CAPACITOR-FXD 3pF 500 V	52763	
A4A5C46	0180-0197	8	1	CAPACITOR-FXO 2.2UF+-10% 20VDC TA	56289	150D225X9020A2-DYS
A4A5C47	0160-4832	4	1	CAPACITOR-FXD .01UF +-10% 100VDC CER	04222	SA101C103KAAH
A4A5C48	0160-4832	4	1	CAPACITOR-FXD .01UF +-10% 100VDC CER	04222	SA101C103KAAH
A4A5C49	0160-4832	4	1	CAPACITOR-FXD .01UF +-10% 100VDC CER	04222	SA101C103KAAH
A4A5C50	0160-4832	4	1	CAPACITOR-FXD .01UF +-10% 100VDC CER	04222	SA101C103KAAH
A4A5C51	0160-4832	4	1	CAPACITOR-FXD .01UF +-10% 100VDC CER	04222	SA101C103KAAH
A4A5C52	0160-4832	4	1	CAPACITOR-FXD .01UF +-10% 100VDC CER	04222	SA101C103KAAH
A4A5C53	0160-4832	4	1	CAPACITOR-FXD .01UF +-10% 100VDC CER	04222	SA101C103KAAH

**Indicates factory-selected value*

HP Part Number 85662-60139

A4A5 Step Gain

Reference Designatior	HP Part Number	C D	Qty	Description	Mfr Code	Mfr Part Number
A4A5C54	0160-4832		1	CAPACITOR-FXO .01UF +-10% 100VDC CER	0422:	SA101C103KAAH
A4A5C55	0160-4832		1	CAPACITOR-FXD .01UF +-10% 100VDC CER	0422;	SA101C103KAAH
A4A5C56	0160-4832		1	CAPACITOR-FXO .01UF +-10% 100VDC CER	0422;	SA101C103KAAH
A4A5C57	0160-4832		1	CAPACITOR-FXD .01UF +-10% 100VDC CER	04221	SA101C103KAAH
A4A5C58	0160-4832		1	CAPACITOR-FXD .01UF +-10% 100VDC CER	0422;	SA101C103KAAH
A4A5C59	0160-4832		1	CAPACITOR-FXD .01UF +-10% 100VDC CER	0422:	SA101C103KAAH
A4A5C61	0160-4832		1	CAPACITOR-FXD .01UF +-10% 100VDC CER	0422:	SA101C103KAAH
A4A5C62	0160-4832		1	CAPACITOR-FXD .01UF +-10% 100VDC CER	0422:	SA101C103KAAH
A4A5C63	0160-4832		1	CAPACITOR-FXD .01UF +-10% 100VDC CER	0422:	SA101C103KAAH
A4A5C64	0180-2216		1	CAPACITOR-FXD 350uF 16 V AL-ELCTLT	5628S	30D357G016DH2-DSM
A4A5CR1	0122-0255		1	DIODE-VVC 1N5144 22PF 10% C4/C60-MIN=3.2	0471:	1N5144
A4A5CR2	1901-0040		1	DIODE-SWITCHING 30V 50MA 2NS DO-35	7146E	
A4A5CR3	1901-0040		1	DIODE-SWITCHING 30V 50MA 2NS DO-35	7146E	
A4A5CR4	1901-0040		1	DIODE-SWITCHING 30V 50MA 2NS 00-35	7146E	
A4A5CR5	1901-1070		1	DIODE-PIN 110V	2848C	
A4A5CR6	1901-1070		1	DIODE-PIN 110V	2848C	
A4A5CR7	1901-1070		1	DIODE-PIN 110V	2848C	
A4A5CR8	1901-1117		1	DIODE-SWITCHING 30V	2M627	1SS135
A4A5CR9	1901-1117		1	DIODE-SWITCHING 30V	2M627	1SS135
A4A5CR10	1901-1117		1	DIODE-SWITCHING 30V	2M627	1SS135
A4A5CR11	1901-1070		1	DIODE-PIN 110V	28480	
A4A5CR12	1901-0040		1	DIODE-SWITCHING 30V 50MA 2NS DO-35	71468	
A4A5CR13	1901-0040		1	DIODE-SWITCHING 30V 50MA 2NS DO-35	71468	
A4A5E1	3170-0029		1	CORE-SHIELDING BEAD	02114	56-590-65A2/4A
A4A5E2	3170-0029		1	CORE-SHIELDING BEAD	02114	56-590-65A2/4A
A4A5E3	3170-0029		1	CORE-SHIELDING BEAD	02114	56-590-65A2/4A
A4A5E4	3170-0029		1	CORE-SHIELDING BEAD	02114	56-590-65A2/4A
A4A5E5	3170-0029		1	CORE-SHIELDING BEAD	02114	56-590-65A2/4A
A4A5E6	3170-0029		1	CORE-SHIELDING BEAD	02114	56-590-65A2/4A
A4A5E7	3170-0029		1	CORE-SHIELDING BEAD	02114	56-590-65A2/4A
A4A5E8	3170-0029		1	CORE-SHIELDING BEAD	02114	56-590-65A2/4A
A4A5E10	3170-0029		1	CORE-SHIELDING BEAD	02114	56-590-65A2/4A
A4A5E11	3170-0029		1	CORE-SHIELDING BEAD	02114	56-590-65A2/4A
A4A5E12	3170-0029		1	CORE-SHIELDING BEAD	02114	56-590-65A2/4A
A4A5E13	3170-0029		1	CORE-SHIELDING BEAD	02114	56-590-65A2/4A
A4A5E14	3170-0029		1	:ORE-SHIELDING BEAD	02114	56-590-65A2/4A
A4A5E15	3170-0029		1	CORE-SHIELDING BEAD	02114	56-590-65A2/4A
A4A5E16	3170-0029		1	:ORE-SHIELDING BEAD	02114	56-590-65A2/4A
A4A5L1	3140-0266		1	[NDUCTOR RF-CH-MLD 1.8UH +-5% .166D-INX.	24226	15M181J
A4A5L2	3140-0158		1	[NDUCTOR RF-CH-ML0 1UH +-10% .105D-INX.2	32159	1A1002M +-10%
A4A5L3	3100-1618		1	INDUCTOR RF-CH-ML0 5.6UH +-10% .166D-INX	99800	1537-30
A4A5L4	3100-1618		1	[NDUCTOR RF-CH-MLD 5.6UH +-10% .166D-INX	99800	1537-30
A4A5L5	3100-1624		1	[NDUCTOR RF-CH-MLD 30UH +-5% .166D-INX.3	99800	1537-50
A4A5L6	3100-1618		1	[NDUCTOR RF-CH-MLD 5.6UH +-10% .166D-INX	99800	1537-30
A4A5L10	1100-1624		1	[NDUCTOR RF-CH-MLD 30UH +-5% .166D-INX.3	99800	1537-50
A4A5L11	3100-1624		1	INDUCTOR RF-CH-MLD 30UH +-5% .166D-INX.3	99800	1537-50
A4A5L12	3100-1624		1	INDUCTOR RF-CH-MLD 30UH +-5% .166D-INX.3	99800	1537-50
A4A5L13	1100-1624		1	INDUCTOR RF-CH-MLD 30UH +-5% .166D-INX.3	99800	1537-50

**Indicates factoryselected value*

HP Part Number 85662-60139

A4A5 Step Gain

Reference Designation	HP Part Number	C. D	Qty	Description	Mfr Code	Mfr Part Number
A4A5L14	9100-1624	9	1	INDUCTOR RF-CH-MLD 30UH +-5% .166D-INX.3	99800	1537-50
A4A5MP1	6960-0016	0	1	PLUG-HOLE TR-HD FOR .125-D-HOLE NYL	02766	207-080501-01-0101
A4A5MP2	85662-20148	3	1	COVER STEP GAIN	28480	85662-20148
A4A5MP3	86701-40001	0	1	EXTRACTOR PC	28480	86701-40001
A4A5MP4				NOT ASSIGNED		
A4A5MP5	2200-0101	0	1	SCREW-MACH 4-40 .188-IN-LG PAN-HD-POZI	77250	
A4A5MP6	1200-0173	9	1	INSULATOR-XSTR DAP-GL	07047	A-10001 OAP
A4A5Q1	1854-0345	8	1	TRANSISTOR NPN 2N5179 SI TO-72 PD=200MW	04713	2N5179
A4A5Q2	1853-0015	7	1	TRANSISTOR PNP SI PD=200MW FT=500MHZ	04713	
A4A5Q3	1854-0345	8	1	TRANSISTOR NPN 2N5179 SI TO-72 PD=200MW	04713	2N5179
A4A5Q4	1853-0015	7	1	TRANSISTOR PNP SI PD=200MW FT=500MHZ	04713	
A4A5Q5	1854-0345	8	1	TRANSISTOR NPN 2N5179 SI TO-72 PD=200MW	04713	2N5179
A4A5Q6	1853-0015	7	1	TRANSISTOR PNP SI PD=200MW FT=500MHZ	04713	
A4A5Q7	1854-0404	a	1	TRANSISTOR NPN SI TO-18 PD=360MW	04713	
A4A5Q8	1854-0019	3	1	TRANSISTOR NPN SI TO-18 PD=360MW	04713	
A4A5Q9	1853-0281	9	1	TRANSISTOR PNP 2N2907A SI TO-18 PD=400MW	04713	2N2907A
A4A5Q10	1854-0019	3	1	TRANSISTOR NPN SI TO-18 PD=360MW	04713	
A4A5Q11	1854-0019	3	1	TRANSISTOR NPN SI TO-18 PD=360MW	04713	
A4A5Q12	1854-0019	3	1	TRANSISTOR NPN SI TO-18 PD=360MW	04713	
A4A5Q13	1854-0019	3	1	TRANSISTOR NPN SI TO-18 PD=360MW	04713	
A4A5Q14	1854-0994	3	1	TRANSISTOR NPN SI TO-72 PD=200MW	04713	2N5179(SEL)
A4A5Q15	1854-0994	3	1	TRANSISTOR NPN SI TO-72 PD=200MW	04713	2N5179(SEL)
A4A5Q16	1854-0019	3	1	TRANSISTOR NPN SI TO-18 PD=360MW	04713	
A4A5Q17	1854-0994	3	1	TRANSISTOR NPN SI TO-72 PD=200MW	04713	2N5179(SEL)
A4A5R1	0698-0084	9	1	RESISTOR 2.15K 1% .125W TF TC=0+-100	19701	SFR25H
A4A5R2	2100-3103	6	1	RESISTOR-TRMR 10K 10% TKF SIDE-ADJ 17-TR	73138	89PR10K
A4A5R3	0757-0440	7	1	RESISTOR 7.5K +-1% .125W TF TC=0+-100	19701	SFR25H
A4A5R4	0757-0458	7	1	RESISTOR 51.1K +-1% .125W TF TC=0+-100	19701	SFR25H
A4A5R5	0757-0288	1	1	RESISTOR 9.09K +-1% .125W TF TC=0+-100	19701	SFR25H
A4A5R6	0757-0442	9	1	RESISTOR 10K +-1% .125W TF TC=0+-100	19701	SFR25H
A4A5R7	0757-0465	6	1	RESISTOR 100K +-1% .125W TF TC=0+-100	19701	SFR25H
A4A5R8	0757-0439	4	1	RESISTOR 6.81K +-1% .125W TF TC=0+-100	19701	SFR25H
A4A5R9	1757-0439	4	1	RESISTOR 6.81K +-1% .125W TF TC=0+-100	19701	SFR25H
A4A5R10*	0698-0083	3	1	RESISTOR 1.96K 1% .125W TF TC=0+-100	19701	SFR25H
A4A5R11	1757-0421	4	1	RESISTOR 825 +-1% .125W TF TC=0+-100	19701	SFR25H
A4A5R12	0757-0442	3	1	RESISTOR 10K +-1% .125W TF TC=0+-100	19701	SFR25H
A4A5R13	0757-0465	5	1	RESISTOR 100K +-1% .125W TF TC=0+-100	19701	SFR25H
A4A5R14	1757-0442	3	1	RESISTOR 10K +-1% .125W TF TC=0+-100	19701	SFR25H
A4A5R15	1757-0442	3	1	RESISTOR 10K +-1% .125W TF TC=0+-100	19701	SFR25H
A4A5R16	1757-0401	0	1	RESISTOR 100 +-1% .125W TF TC=0+-100	19701	SFR25H
A4A5R17	1757-0346	2	1	RESISTOR 10 +-1% .125W TF TC=0+-100	91637	CMF-55-1, T-1
A4A5R18	0698-3444	1	1	RESISTOR 316 1% .125W TF TC=0+-100	19701	SFR25H
A4A5R19	1698-3437	2	1	RESISTOR 133 1% .125W TF TC=0+-100	19701	SFR25H
A4A5R20	0698-0083	3	1	RESISTOR 1.96K 1% .125W TF TC=0+-100	19701	SFR25H
A4A5R21	0698-3444	1	1	RESISTOR 316 1% .125W TF TC=0+-100	19701	SFR25H
A4A5R22	0757-0346	2	1	RESISTOR 10 +-1% .125W TF TC=0+-100	91637	CMF-55-1, T-1
A4A5R23	0698-3437	2	1	RESISTOR 133 1% .125W TF TC=0+-100	19701	SFR25H

**Indicates factory-selected value*

HP Part Number 85662-60139

A4A5 Step Gain

Reference Designatior	HP Part Number	C D	Qty	Description	Mfr Code	Mfr Part Number
A4A5R24	0698-0083	8	1	RESISTOR 1.96K 1% .125W TF TC=0+-100	19701	SFR25H
A4A5R25	0757-0279	6	1	RESISTOR 3.16K +-1% .125W TF TC=0+-100	19701	SFR25H
A4A5R26	0757-0279	6	1	RESISTOR 3.16K +-1% .125W TF TC=0+-100	19701	SFR25H
A4A5R27	0757-0290	1	1	RESISTOR 6.19K +-1% .125W TF TC=0+-100	19701	SFR25H
A4A5R28	0698-3444		1	RESISTOR 316 1% .125W TF TC=0+-100	19701	SFR25H
A4A5R29	0757-0276		1	RESISTOR 61.9 +-1% .125W TF TC=0+-100	19701	SFR25H
A4A5R30	0698-3260	9	1	RESISTOR 464K 1% .125W TF TC=0+-100	19701	SFR25H
A4A5R31	0757-0280	3	1	RESISTOR 1K +-1% .125W TF TC=0+-100	19701	SFR25H
A4A5R32	2100-3056	8	1	RESISTOR-TRMR 5K 10% TKF SIDE-ADJ 17-TRN	73138	89PR5K
A4A5R33	2100-3163	8	1	RESISTOR-TRMR 1M 20% TKF SIDE-ADJ 17-TRN	73138	89PR1M
A4A5R34	0757-0465	6	1	RESISTOR 100K +-1% .125W TF TC=0+-100	19701	SFR25H
A4A5R35	0698-3132	4	1	RESISTOR 261 1% .125W TF TC=0+-100	19701	SFR25H
A4A5R36	0757-0280	3	1	RESISTOR 1K +-1% .125W TF TC=0+-100	19701	SFR25H
A4A5R37	0757-0276	7	1	RESISTOR 61.9 +-1% .125W TF TC=0+-100	19701	SFR25H
A4A5R38	0757-0401	C	1	RESISTOR 100 +-1% .125W TF TC=0+-100	19701	SFR25H
A4A5R39	0757-0290	5	1	RESISTOR 6.19K +-1% .125W TF TC=0+-100	19701	SFR25H
A4A5R40	0698-3444	1	1	RESISTOR 316 1% .125W TF TC=0+-100	19701	SFR25H
A4A5R41	0698-4037	C	1	RESISTOR 46.4 1% .125W TF TC=0+-100	19701	SFR25H
A4A5R42	0698-3260	9	1	RESISTOR 464K 1% .125W TF TC=0+-100	19701	SFR25H
A4A5R43	0757-0280	3	1	RESISTOR 1K +-1% .125W TF TC=0+-100	19701	SFR25H
A4A5R44	2100-3056	8	1	RESISTOR-TRMR 5K 10% TKF SIDE-ADJ 17-TRN	73138	89PR5K
A4A5R45	0757-0280	3	1	RESISTOR 1K +-1% .125W TF TC=0+-100	19701	SFR25H
A4A5R46	0757-0420	3	1	RESISTOR 750 +-1% .125W TF TC=0+-100	19701	SFR25H
A4A5R47	0757-0276	7	1	RESISTOR 61.9 +-1% .125W TF TC=0+-100	19701	SFR25H
A4A5R48	0698-4037	C	1	RESISTOR 46.4 1% .125W TF TC=0+-100	19701	SFR25H
A4A5R49	0757-0290	5	1	RESISTOR 6.19K +-1% .125W TF TC=0+-100	19701	SFR25H
A4A5R50	3698-3444	1	1	RESISTOR 316 1% .125W TF TC=0+-100	19701	SFR25H
A4A5R51	2100-3161	6	1	RESISTOR-TRMR 20K 10% TKF SIDE-ADJ 17-TR	73138	89PR20K
A4A5R52	3698-3260	9	1	RESISTOR 464K 1% .125W TF TC=0+-100	19701	SFR25H
A4A5R53	0757-0280	3	1	RESISTOR 1K +-1% .125W TF TC=0+-100	19701	SFR25H
A4A5R54	2100-3056	8	1	RESISTOR-TRMR 5K 10% TKF SIDE-ADJ 17-TRN	73138	89PR5K
A4A5R55	0757-0420	3	1	RESISTOR 750 +-1% .125W TF TC=0+-100	19701	SFR25H
A4A5R56	1757-0280	3	1	RESISTOR 1K +-1% .125W TF TC=0+-100	19701	SFR25H
A4A5R59	1698-0084	9	1	RESISTOR 2.15K 1% .125W TF TC=0+-100	19701	SFR25H
A4A5R60	1698-3260	9	1	RESISTOR 464K 1% .125W TF TC=0+-100	19701	SFR25H
A4A5R61	0757-0403	2	1	RESISTOR 121 +-1% .125W TF TC=0+-100	19701	SFR25H
A4A5R62*	1698-0083	8	1	RESISTOR 1.96K 1% .125W TF TC=0+-100	19701	SFR25H
A4A5R63	0757-0398	4	1	ZESISTOR 75 +-1% .125W TF TC=0+-100	19701	SFR25H
A4A5R64	0757-0280	3	1	ZESISTOR 1K +-1% .125W TF TC=0+-100	19701	SFR25H
A4A5R65	0757-0442	9	1	RESISTOR 10K +-1% .125W TF TC=0+-100	19701	SFR25H
A4A5R66	0757-0442	9	1	ZESISTOR 10K +-1% .125W TF TC=0+-100	19701	SFR25H
A4A5R67	0698-0084	9	1	ZESISTOR 2.15K 1% .125W TF TC=0+-100	19701	SFR25H
A4A5R68	0698-3260	9	1	RESISTOR 464K 1% .125W TF TC=0+-100	19701	SFR25H
A4A5R69	0757-0395	1	1	RESISTOR 56.2 +-1% .125W TF TC=0+-100	19701	SFR25H
A4A5R70*	1757-0419	0	1	RESISTOR 681 +-1% .125W TF TC=0+-100	19701	SFR25H
A4A5R71	1757-0401	0	1	RESISTOR 100 +-1% .125W TF TC=0+-100	19701	SFR25H
A4A5R80	1757-0280	3	1	RESISTOR 1K +-1% .125W TF TC=0+-100	19701	SFR25H
A4A5R83	1698-0084	9	1	RESISTOR 2.15K 1% .125W TF TC=0+-100	19701	SFR25H

**Indicates factory-selected value*

HP Part Number 85662-60139

A4A5 Step Gain

Reference Designation	HP Part Number	CD	Qty	Description	Mfr Code	Mfr Part Number
A4A5R84	3698-3260	9	1	RESISTOR 464K 1% .125W TF TC=0+-100	19701	SFR25H
A4A5R85	1698-3435	(	1	RESISTOR 38.3 1% .125W TF TC=0+-100	19701	SFR25H
A4A5R86*	1698-3443	(	1	RESISTOR 287 1% .125W TF TC=0+-100	19701	SFR25H
A4A5R87	1698-3438	3	1	RESISTOR 147 1% .125W TF TC=0+-100	19701	SFR25H
A4A5R88	)757-0317	7	1	RESISTOR 1.33K +-1% .125W TF TC=0+-100	19701	SFR25H
A4A5R89	1757-0280	3	1	RESISTOR 1K +-1% .125W TF TC=0+-100	19701	SFR25H
A4A5R90	)757-0442	(	1	RESISTOR 10K +-1% .125W TF TC=0+-100	19701	SFR25H
A4A5R91	)757-0280	3	1	RESISTOR 1K +-1% .125W TF TC=0+-100	19701	SFR25H
A4A5R92	1698-3260	9	1	RESISTOR 464K 1% .125W TF TC=0+-100	19701	SFR25H
A4A5R93	1757-0180	i	1	RESISTOR 31.6 +-1% .125W TF TC=0+-100	19701	SFR25H
A4A5R96	)757-0401	(	1	RESISTOR 100 +-1% .125W TF TC=0+-100	19701	SFR25H
A4A5R97	)757-0346	2	1	RESISTOR 10 +-1% .125W TF TC=0+-100	91637	CMF-55-1. T-1
A4A5TP1	1251-0600	(	1	CONNECTOR-SGL CONT PIN 1.14-MM-BSC-SZ SQ	27264	16-06-0034
A4A5TP2	1251-0600	(	1	CONNECTOR-SGL CONT PIN 1.14-MM-BSC-SZ SQ	27264	16-06-0034
A4A5TP3	1251-0600	(	1	CONNECTOR-SGL CONT PIN 1.14-MM-BSC-SZ SQ	27264	16-06-0034
A4A5U1	1826-1058	3	1	IC OP AMP GP 8-TO-99 PKG	06665	OP-OECJ
A4A5VR1	.902-3104	8	1	DIODE-ZNR 5.62V 5% DO-35 PD=.4W	04713	
A4A5Y1	)410-1489	2	1	CRYSTAL-QUARTZ 18.4 MHZ HC-32/U-HLDR	33096	

Analyzer Repair Inc.

**Indicates factory-selected value*

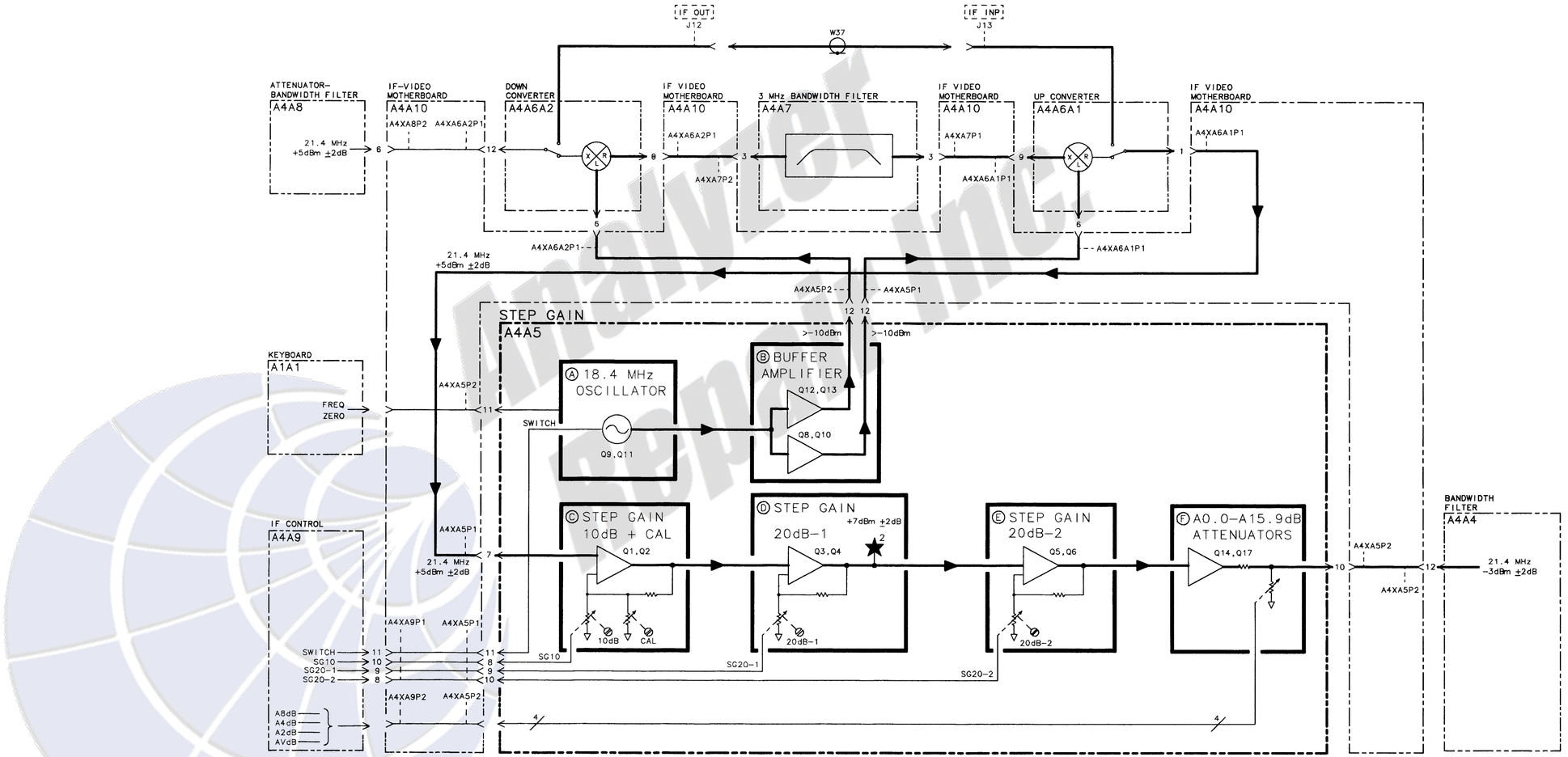

A4A5 STEP GAIN, BLOCK DIAGRAM

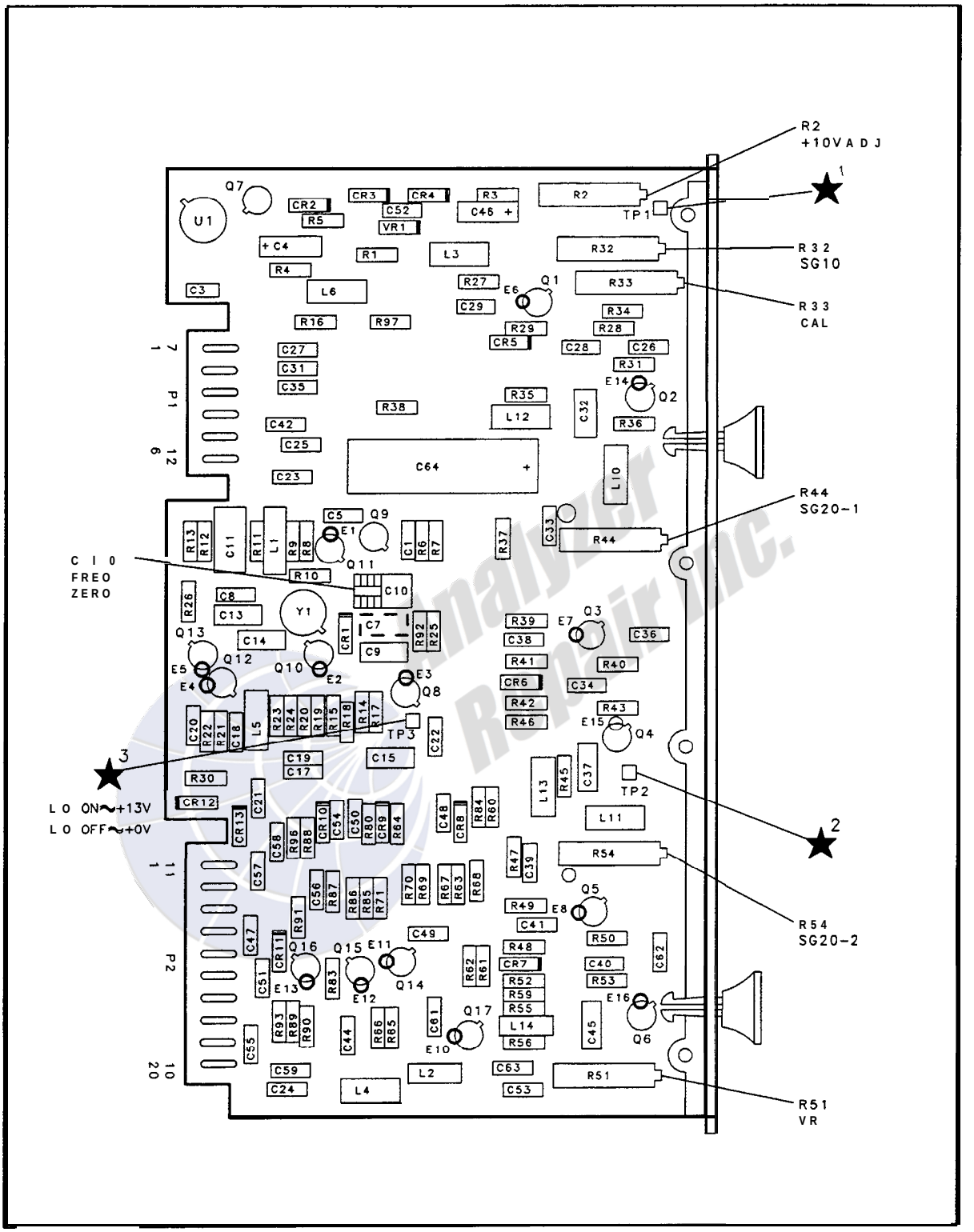

A4A5 Step Gain Component Locations, 85662-60139

A4A5 STEP GAIN
85662-60139
(SERIAL PREFIX: 2403A)

P1

PIN	SIGNAL	TO/FROM	FUNCTION BLOCK
1	GND	A4A8A1P1-1	G
2	21.4 MHz		G
3	GND	A4A9P1-10	C
4	SG10		G
5	GND	A4A9P1-9	D
6	SG20-1		G
7	GND	A4A9P1-8	E
8	SG20-2		G
9	+10V	A4A4P1-11, A4A9P1-3	G
10	SWITCH	A4A9P1-11	A
11			
12	GND		G
	18.4 MHz LO	A4A8A1P1-6	B

P2

PIN	SIGNAL	TO/FROM	FUNCTION BLOCK
1	GND		G
11	FREQ ZERO	A1A1W1-2	A
2	GND		G
12	18.4 MHz LO	A4A8A2P1-1	B
3	GND		G
13	AV dB	A4A9P2-7	F
4	GND		G
14	GND		G
5	GND		G
15	A8 dB	A4A9P2-5	G
6	GND		G
16	A4 dB	A4A9P2-4	F
7	GND		G
17	A2 dB	A4A9P2-22	F
8	GND		G
18	−15V		G
9	GND		G
19	+15V		G
10	21.4 MHz	A4A4P2-12	F
20	GND		G

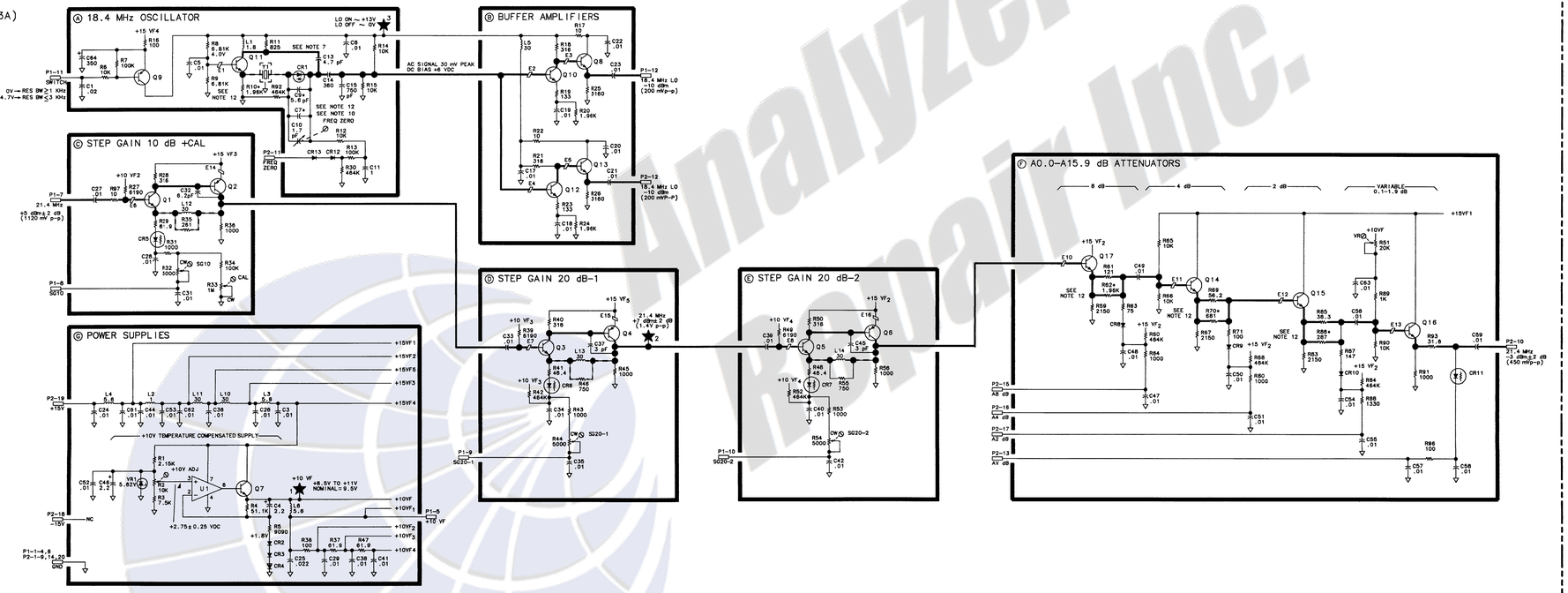

NOTES:

1. REFERENCE DESIGNATORS WITHIN THIS ASSEMBLY ARE ABBREVIATED. FOR COMPLETE REFERENCE DESIGNATION PREFIX ABBREVIATION WITH ASSEMBLY DESIGNATION.
2. UNLESS OTHERWISE INDICATED: RESISTANCE IS IN OHMS (Ω) CAPACITANCE IS IN MICROFARADS(μF) INDUCTANCE IS IN MICROHENRIES(μH)
3. ASTERISK (*) DENOTES FACTORY SELECTED COMPONENT. TYPICAL VALUE IS SHOWN. REFER TO NOTE 12 FOR RANGE OF VALUES.
4. MNEMONIC TABLE:

MNEMONIC	DESCRIPTION
A2 dB	ATTENUATION 2 dB
A4 dB	ATTENUATION 4 dB
A8 dB	ATTENUATION 8 dB
AV dB	ATTENUATION VARIABLE
FREQ ZERO	FREQUENCY ZERO FROM FRONT PANEL CONTROL
SG10	STEP GAIN 10 dB
SG20-1	STEP GAIN 20 dB-1
SG20-2	STEP GAIN 20 dB-2
SWITCH	LOW = DOWN CONVERTING (3 MHz IF)

5. RF PERFORMANCE OF THIS BOARD IS ADVERSELY AFFECTED BY USE OF EXTENDERS. SEE TROUBLESHOOTING HINTS FOR INFORMATION ON REPAIR OF THIS BOARD.
6. INSTRUMENT CONTROL SETTINGS FOR ALL MEASUREMENTS ON THIS BOARD ARE AS FOLLOWS:

INSTRUMENT PRESET	
CENTER FREQUENCY	CAL. OUT FREQ.
FREQUENCY SPAN	0 Hz
ATTENUATION	0 dB

7. 300 mV PEAK (SCOPE PROBE MAY LOAD THE CIRCUIT, MAKING ACCURATE MEASUREMENT DIFFICULT.)
8. STEP GAIN TRUTH TABLE:

REF. LEVEL / RES BW ≤ 1 kHz	dBm	−10	−20	−30	−40	−50	−60	−70	≤ −80
SG10	LOG	> 7.5V	> 7.5V	> 7.5V	0V	> 7.5V	0V	> 7.5V	0V
SG20-1	LOG	> 8.5V	> 8.5V	> 8.5V	> 8.5V	0V	0V	0V	0V
SG20-2	LOG	> 8.5V	> 8.5V	> 8.5V	> 8.5V	> 8.5V	0V	0V	0V

9. A0.0 − 15.9 dB ATTENUATOR CONTROL TABLE:

REF. LEVEL dBm	CONTROL LINES A2 dB	A4 Db	a8 Db
−10	> +13V	> +13V	0V
−11	> +13V	> +13V	0V
−12	0V	0V	> +13V
−13	0V	0V	> +13V
−14	> +13V	0V	> +13V
−15	> +13V	0V	> +13V
−16	0V	> +13V	> +13V
−17	0V	> +13V	> +13V
−18	> +13V	> +13V	> +13V
−19	> +13V	> +13V	> +13V

10. C7* IS NOT NORMALLY INSTALLED.
11. UNLESS OTHERWISE INDICATED: SIGNALS ENTER AT LEFT SIDE AND EXIT AT RIGHT SIDE OF FUNCTION BLOCKS.
10. C9*, R10*, R70*, R75*, AND R86* ARE FACTORY-SELECTED COMPONENTS. A RANGE OF ACCEPTABLE VALUES FOR EACH IS LISTED BELOW.

COMPONENT	ACCEPTABLE VALUE
C9*	0pF − 16pF
R10*	1330Ω − 2430Ω
R75*	3480Ω − 24.9kΩ
R70*	475Ω − 1620Ω
R86*	215Ω − OPEN

Analyzer Repair Inc.

A4A5

A4A5 STEP GAIN, SCHEMATIC DIAGRAM

A4A6

A4A6A 1 Up Converter, Circuit Description

For narrow (≤1 kHz) bandwidths, A4A6A1 Up Converter Assembly converts the 3 MHz IF signal from A4A7 3 MHz Filter to a 21.4 MHz IF signal and sends it to A4A5 Step Gain. For wide (≥3 kHz) bandwidths, the 21.4 MHz from A4A6A2 Down Converter is amplified and sent to A4A5.

Variable Gain Amplifier Ⓐ

The Variable Gain Amplifier has about 6 dB of gain to compensate for the loss incurred by the 50 Ohm Driver in A4A6A2, which converts the 21.4 MHz IF signal into a 50 Ohm system.

21.4 MHz IF Switch Ⓑ

For wide (≥3 kHz) bandwidths, the SWITCH line goes to +15 V, which turns Q6 off. This forward biases CR3 (the current is sunk through the LO Driver and Buffer Amplifier) and reverse biases CR2, allowing the 21.4 MHz IF signal to pass through CR3 and then to A4A5.

For narrow (≤1 kHz) bandwidths, the SWITCH line goes to 1 V, turning Q6 on. The collector of Q6 goes to about +15 V, which turns the LO Driver on, forward biases CR2, and reverse biases CR3, breaking the path from the Variable Gain Amplifier.

LO Driver and Buffer Amplifier Ⓒ

This circuit is only on for bandwidths ≤1 kHz. It consists of an emitter follower (Q7) driving a common base stage (Q8) which in turn drives a common emitter stage (Q9). The voltages and signal levels are indicated on the schematic.

Mixer Ⓓ

The Mixer is double balanced and has about 6 dB conversion loss. It mixes the 3 MHz IF signal from A4A7 with the 18.4 MHz LO signal from the LO Driver and Buffer Amplifier to produce a 21.4 MHz signal through the 21.4 MHz Bandpass Amplifier to A4A5.

21.4 MHz Bandpass Amplifier Ⓔ

This is a common emitter amplifier with about 7 dB of gain. It is preceded by a wide (BW ≈ 5 MHz) bandpass filter (R61, C32, and L2) and followed by a narrow (BW ≈ 10 kHz) bandpass (T1, Y1, L8, and R60). The wide filter attenuates harmonics of the 18.4 MHz LO, and the narrow filter attenuates the fundamental of the 18.4 MHz LO. 18.4 MHz NULL adjustment C31 compensates for the case capacitance of the crystal. The crystal Y1 and inverting transformer T1 are driven by an emitter follower Q4. The output emitter follower is turned on and off by the SWITCH line.

Analyzer Depot Inc.

A4A6A2 Down Converter, Circuit Description

For resolution bandwidths ≤1 kHz, A4A6A2 Down Converter converts the 21.4 MHz IF signal from A20 Third Converter down to a 3 MHz IF signal. For resolution bandwidths ≥3 kHz, the 21.4 MHz is not converted but is sent through A4A6A1 Up Converter to A4A5 Step Gain.

Switch © and 50 Ohm Driver Ⓐ

For bandwidths ≥3 kHz, the SWITCH line is +15 V and Q7 is off. R38 in the LO Driver and Buffer Amplifier pulls the collector of Q7 to less than 0 V. This forward biases CR3 and reverse biases CR5, passing the 21.4 MHz IF signal to the 50 Ohm Driver, where it is converted to a 50 Ohm system (6 dB loss) and sent to A4A6A1.

For bandwidths ≤1 kHz, the SWITCH line is 0 V, turning Q7 on. The collector Q7 goes to almost +15 V, which turns CR5 on (shorting any signal that might pass through CR3) and CR3 off. Q7 also turns the LO on.

LO Driver and Buffer Amplifier Ⓑ

This circuit is only on for bandwidths ≤1 kHz. It consists of an emitter follower Q6 driving a common base stage Q5 which in turn drives a common emitter stage Q2. The proper bias voltages and signal levels are shown on the schematic.

Mixer and Driver Ⓓ

Q1 is an emitter follower driving a step-down transformer. The turns ratio is about 4-1/2 to 1, which yields a 12 dB loss and drives the Mixer from a low impedance. The Mixer has an additional 5 dB loss.

3 MHz Bandpass Amplifier Ⓔ

This amplifier compensates for the losses of the transformer T1 and the mixer U1. The filter at the output, consisting of L5, C22, and R52, has less than 1 dB of loss at 3 MHz.

Analyzer Repair Inc.

A4A6 Down/Up Converter, Troubleshooting

If the resolution bandwidths less than 3 kHz are not working properly, the fault is most likely on the Down/Up Converter or the 3 MHz Bandwidth Filter boards.

If only noise is displayed, check the voltage on the SWITCH control lines. If the SWITCH line is working, the 18.4 MHz LO signal levels should be tested. The 18.4 MHz Oscillator is located on the A4A5 Step Gain board.

A4A6A2R33* may have to be changed if mixer A4A6A2U1 is replaced. Refer to the Performance Tests and Adjustments Manual for the correct procedure for selecting this value.

Note that the SWITCH control line voltage is different on the A4A6A1 Up Converter board. This is due to a 100 Ohm resistor, R4, on the A4A10 IF Video Motherboard.

Analyzer Repair Inc.

HP Part Number 85662-60018

A4A6 Down/Up Converter

Reference Designation	HP Part Number	C D	Qty	Description	Mfr Code	Mfr Part Number
A4A6	35662-60018		1	BOARD ASSEMBLY, DOWN/UP CONVERTER	28480	85662-60018
A4A6A1	35662-60006		1	BOARD ASSEMBLY, UP CONVERTER	28480	85662-60006
A4A6A2	35662-60005		1	BOARD ASSEMBLY, DOWN CONVERTER	28480	85662-60005
A4A6J1	1250-2112		1	CONNECTOR-RF SMB M SGL-HOLE-FR 50-OHM	98291	051-047-0259-220
A4A6J2	1250-2112		1	CONNECTOR-RF SMB M SGL-HOLE-FR 50-OHM	98291	051-047-0259-220
A4A6MP1	2190-0557		2	WASHER-LK INTL T NO. 10 .195-IN-ID	78189	1210-06-00-0551
A4A6MP2	2200-0101		4	SCREW-MACH 4-40 .188-IN-LG PAN-HD-POZI	77250	
A4A6MP3	2950-0078		2	NUT-HEX-DBL-CHAM 10-32-THD .067-IN-THK	74163	500220
A4A6MP5	35662-20039		1	COVER, DOWN/UP CONVERTER	28480	85662-20039
A4A6MP6	16701-40001		2	EXTRACTOR PC	28480	86701-40001
A4A6MP7	5960-0016		2	PLUG-HOLE TR-HD FOR .125-D-HOLE NYL	02768	207-080501-01-0101

Analyzer Repair Inc.

**Indicates factory-selected value*

HP Part Number 85662-60006

A4A6A1 Up Converter

Reference Designation	HP Part Number	C D	Qty	Description	Mfr Code	Mfr Part Number
A4A6A1	85662-60006	6	1	BOARD ASSEMBLY, UP CONVERTER	28480	85662-60006
A4A6A1C2	0160-2055	9	1	CAPACITOR-FXD .01UF +BO-20% 100VDC CER		805-504 Y5V 103Z
A4A6A1C4	0160-4084	a	1	CAPACITOR-FXD 0.1uF 50 V	56289	1C20X7R104M050B
A4A6A1C5	0160-2055	9	1	CAPACITOR-FXD .01UF +BO-20% 100VDC CER		805-504 Y5V 103Z
A4A6A1C6	0160-2055	9	1	CAPACITOR-FXD .01UF +BO-20% 100VDC CER		805-504 Y5V 103Z
A4A6A1C9	0160-4084	a	1	CAPACITOR-FXD 0.1uF 50 V	56289	1C20X7R104M050B
A4A6A1C11	0160-2055	9	1	CAPACITOR-FXD .01UF +BO-20% 100VDC CER		805-504 Y5V 103Z
A4A6A1C12	0160-2055	9	1	CAPACITOR-FXD .01UF +80-20% 100VDC CER		805-504 Y5V 103Z
A4A6A1C13	0160-2055	9	1	CAPACITOR-FXD .01UF +BO-20% 100VDC CER		805-504 Y5V 103Z
A4A6A1C16	0160-2055	9	1	CAPACITOR-FXD .01UF +80-20% 100VDC CER		805-504 Y5V 103Z
A4A6A1C17	0160-2055	9	1	CAPACITOR-FXD .01UF +BO-20% 100VDC CER		805-504 Y5V 103Z
A4A6A1C18	0160-2055	9	1	CAPACITOR-FXD .01UF +BO-20% 100VDC CER		805-504 Y5V 103Z
A4A6A1C19	0160-2055	9	1	CAPACITOR-FXD .01UF +BO-20% 100VDC CER		805-504 Y5V 103Z
A4A6A1C20	0160-2055	9	1	CAPACITOR-FXD .01UF +BO-20% 100VDC CER		805-504 Y5V 103Z
A4A6A1C21	0160-2055	9	1	CAPACITOR-FXD .01UF +BO-20% 100VDC CER		805-504 Y5V 103Z
A4A6A1C22	0160-2055	9	1	CAPACITOR-FXD .01UF +80-20% 100VDC CER		805-504 Y5V 103Z
A4A6A1C23	0160-2055	9	1	CAPACITOR-FXD .01UF +BO-20% 100VDC CER		805-504 Y5V 103Z
A4A6A1C24	0160-2055	9	1	CAPACITOR-FXD .01UF +BO-20% 100VDC CER		805-504 Y5V 103Z
A4A6A1C25	0160-2055	9	1	CAPACITOR-FXD .01UF +BO-20% 100VDC CER		805-504 Y5V 103Z
A4A6A1C26	0160-2055	9	1	CAPACITOR-FXD .01UF +BO-20% 100VDC CER		805-504 Y5V 103Z
A4A6A1C27	0160-2244	a	1	CAPACITOR-FXD 3pF 500 V	52763	
A4A6A1C30	0160-2055	9	1	CAPACITOR-FXD .01UF +BO-20% 100VDC CER		805-504 Y5V 103Z
A4A6A1C31	0121-0453	5	1	CAPACITOR-V TRMR-AIR 1.3-5.4PF 175V PC-M	74970	187-0303-125
A4A6A1C32	0140-0199	6	1	CAPACITOR-FXD 24DPF +-5% 300VDC MICA	09023	CD15FD241J03
A4A6A1CR2	1901-0047	a	1	DIODE-SWITCHING 20V 75MA IONS DO-35	71468	
A4A6A1CR3	1901-0047	a	1	DIODE-SWITCHING 20V 75MA 10NS DO-35	71468	
A4A6A1CR4	1901-0047	a	1	DIODE-SWITCHING 20V 75MA 10NS DO-35	71468	
A4A6A1E1	9170-0029	3	1	CORE-SHIELDING BEAD	02114	56-590-65A2/4A
A4A6A1E2	9170-0029	3	1	CORE-SHIELDING BEAD	02114	56-590-65A2/4A
A4A6A1E3	9170-0029	3	1	CORE-SHIELDING BEAD	02114	56-590-65A2/4A
A4A6A1E4	9170-0029	3	1	CORE-SHIELDING BEAD	02114	56-590-65A2/4A
A4A6A1E5	9170-0029	3	1	CORE-SHIELDING BEAD	02114	56-590-65A2/4A
A4A6A1E6	9170-0029	3	1	CORE-SHIELDING BEAD	02114	56-590-65A2/4A
A4A6A1E7	9170-0029	3	1	CORE-SHIELDING BEAD	02114	56-590-65A2/4A
A4A6A1L1	9140-0112	2	1	INDUCTOR RF-CH-MLD 4.7UH +-10% .166D-INX	99800	1537-28
A4A6A1L2	9100-1611	4	1	INDUCTOR RF-CH-MLD 220NH +-20% .166D-INX	99800	1537-02
A4A6A1L4	9100-1624	9	1	INDUCTOR RF-CH-MLD 30UH +-5% .166D-INX.3	99800	1537-50
A4A6A1L5	9100-1620	5	1	INDUCTOR RF-CH-MLD 15UH +-10% .166D-INX.	99800	1537-40
A4A6A1L7	9140-0112	2	1	INDUCTOR RF-CH-MLD 4.7UH +-10% .166D-INX	99800	1537-28
A4A6A1L8	9100-1618	1	1	INDUCTOR RF-CH-MLD 5.6UH +-10% .166D-INX	99800	1537-30
A4A6A1MP2				NOT ASSIGNED		
A4A6A1MP3	1200-0758	2	1	SOCKET-CRYSTAL 2-CONT HC-25/U DIP-SLOR	91506	8004-1G23
A4A6A1Q1	1854-0019	3	1	TRANSISTOR NPN SI TO-18 PD=360MW	04713	
A4A6A1Q2	1853-0007	7	1	TRANSISTOR PNP 2N3251 SI TO-18 PD=360MW	04713	2N3251
A4A6A1Q3	1854-0345	a	1	TRANSISTOR NPN 2N5179 SI TO-72 PD=200MW	04713	2N5179
A4A6A1Q4	1854-0019	3	1	TRANSISTOR NPN SI TO-18 PD=360MW	04713	
A4A6A1Q5	1854-0247	9	1	TRANSISTOR NPN SI TO-39 PD=1W FT=800MHZ	04713	

**Indicates factory-selected value*

HP Part Number 85662-60006

A4A6A1 Up Converter

Reference Designatio	HP Part Number	C D	Qty	Description	Mfr Code	Mfr Part Number
A4A6A1Q6	1853-0007		1	TRANSISTOR PNP 2N3251 SI TO-18 PD=360MW	0471	2N3251
A4A6A1Q7	1854-0019		1	TRANSISTOR NPN SI TO-18 PD=360MW	0471	
A4A6A1Q8	1854-0019		1	TRANSISTOR NPN SI TO-18 PD=360MW	0471	
A4A6A1Q9	1854-0019		1	TRANSISTOR NPN SI TO-18 PD=360MW	0471	
A4A6A1R1	0757-0401		1	RESISTOR 100 +-1% .125W TF TC=0+-100	1970	SFR25H
A4A6A1R4	0757-1094		1	RESISTOR 1.47K +-1% .125W TF TC=0+-100	1970	SFR25H
A4A6A1R5	0757-0465		1	RESISTOR 100K +-1% .125W TF TC=0+-100	1970	SFR25H
A4A6A1R6	0757-0438		1	RESISTOR 5.11K +-1% .125W TF TC=0+-100	1970	SFR25H
A4A6A1R9	0698-3442		1	RESISTOR 237 1% .125W TF TC=0+-100	1970.	SFR25H
A4A6A1R10	0757-0400		1	RESISTOR 90.9 +-1% .125W TF TC=0+-100	1970:	SFR25H
A4A6A1R12	0757-0279		1	RESISTOR 3.16K +-1% .125W TF TC=0+-100	1970:	SFR25H
A4A6A1R13	0757-0279		1	RESISTOR 3.16K +-1% .125W TF TC=0+-100	1970:	SFR25H
A4A6A1R14	0757-0465		1	RESISTOR 100K +-1% .125W TF TC=0+-100	19701	SFR25H
A4A6A1R15	0757-0280		1	RESISTOR 1K +-1% .125W TF TC=0+-100	19701	SFR25H
A4A6A1R16	0757-0317		1	RESISTOR 1.33K +-1% .125W TF TC=0+-100	19701	SFR25H
A4A6A1R17	0757-0442		1	RESISTOR 10K +-1% .125W TF TC=0+-100	19701	SFR25H
A4A6A1R18	0757-0442		1	RESISTOR 10K +-1% .125W TF TC=0+-100	19701	SFR25H
A4A6A1R19	0757-0280		1	RESISTOR 1K +-1% .125W TF TC=0+-100	19701	SFR25H
A4A6A1R20	0757-0280		1	RESISTOR 1K +-1% .125W TF TC=0+-100	19701	SFR25H
A4A6A1R21	0757-0180		1	RESISTOR 31.6 +-1% .125W TF TC=0+-100	19701	SFR25H
A4A6A1R22	0757-0180		1	RESISTOR 31.6 +-1% .125W TF TC=0+-100	19701	SFR25H
A4A6A1R23	0757-0346		1	RESISTOR 10 +-1% .125W TF TC=0+-100	91637	CMF-55-1, T-1
A4A6A1R24	0757-0416		1	RESISTOR 511 +-1% .125W TF TC=0+-100	19701	SFR25H
A4A6A1R25	0757-0280		1	RESISTOR 1K +-1% .125W TF TC=0+-100	19701	SFR25H
A4A6A1R26	1757-0394		1	RESISTOR 51.1 +-1% .125W TF TC=0+-100	19701	SFR25H
A4A6A1R27	1757-0439	4	1	RESISTOR 6.81K +-1% .125W TF TC=0+-100	19701	SFR25H
A4A6A1R28	0757-0442	9	1	RESISTOR 10K +-1% .125W TF TC=0+-100	19701	SFR25H
A4A6A1R29	2100-3154		1	RESISTOR-TRMR 1K 10% TKF SIDE-ADJ 17-TRN	73138	89PR1K
A4A6A1R30	0698-3439	4	1	RESISTOR 178 1% .125W TF TC=0+-100	19701	SFR25H
A4A6A1R32	1757-0419	0	1	RESISTOR 681 +-1% .125W TF TC=0+-100	19701	SFR25H
A4A6A1R33	0757-0346	2	1	RESISTOR 10 +-1% .125W TF TC=0+-100	91637	CMF-55-1, T-1
A4A6A1R34	0757-0442	9	1	RESISTOR 10K +-1% .125W TF TC=0+-100	19701	SFR25H
A4A6A1R35	0698-3444	1	1	RESISTOR 316 1% .125W TF TC=0+-100	19701	SFR25H
A4A6A1R50	0757-0442	9	1	RESISTOR 10K +-1% .125W TF TC=0+-100	19701	SFR25H
A4A6A1R51	0757-0447	4	1	RESISTOR 16.2K +-1% .125W TF TC=0+-100	19701	SFR25H
A4A6A1R60	0757-0416	7	1	RESISTOR 511 +-1% .125W TF TC=0+-100	19701	SFR25H
A4A6A1R61	0757-0401	0	1	RESISTOR 100 +-1% .125W TF TC=0+-100	19701	SFR25H
A4A6A1T1	5662-80002	4	1	COIL ASSEMBLY TRANSFORMER	28480	85662-80002
A4A6A1TP2	0360-2361	0	1	CONNECTOR-SGL CONT PIN 1.14-MM-BSC-SZ SQ	27264	16-06-0034
A4A6A1TP3	0360-2361	0	1	CONNECTOR-SGL CONT PIN 1.14-MM-BSC-SZ SQ	27264	16-06-0034
A4A6A1U1	1955-0084	5	1	U-WAVE MIXER 500 MHZ MAX	15542	SRA-1H-32
A4A6A1W1	1151-0014	5	1	WIRE 24AWG 1X24	94130	
A4A6A1Y1				CRYSTAL, QUARTZ, PART OF A MATCHED SET O SIX, INCLUDES A4A4Y1-3, A4A6A1Y1, AND A4A8Y1-2 (REFER TO A4A4Y1)		

**Indicates factory-selected value*

HP Part Number 85662-60005

A4A6A2 Down Converter

Reference Designation	HP Part Number	CD	Qty	Description	Mfr Code	Mfr Part Number
A4A6A2	85662-60005	5	1	BOARD ASSEMBLY, DOWN CONVERTER	2848	85662-60005
A4A6A2C2	0160-2055	9	1	CAPACITOR-FXD .01UF +80-20% 100VDC CER		805-504 Y5V 1032
A4A6A2C4	0160-2055	9	1	CAPACITOR-FXD .01UF +80-20% 100VDC CER		805-504 Y5V 1032
A4A6A2C7	0160-2055	9	1	CAPACITOR-FXD .01UF +80-20% 100VDC CER		805-504 Y5V 1032
A4A6A2C8	0160-2055	9	1	CAPACITOR-FXD .01UF +80-20% 100VDC CER		805-504 Y5V 103Z
A4A6A2C9	0160-2055	9	1	CAPACITOR-FXD .01UF +80-20% 100VDC CER		805-504 Y5V 1032
A4A6A2C10	0160-2055	9	1	CAPACITOR-FXD .01UF +80-20% 100VDC CER		805-504 Y5V 103Z
A4A6A2C11	0160-2055	9	1	CAPACITOR-FXD .01UF +80-20% 100VDC CER		805-504 Y5V 103Z
A4A6A2C12	0160-2055	9	1	CAPACITOR-FXD .01UF +80-20% 100VDC CER		805-504 Y5V 103Z
A4A6A2C13	0160-2055	9	1	CAPACITOR-FXD .01UF +80-20% 100VDC CER		805-504 Y5V 103Z
A4A6A2C14	0140-0196	3	1	CAPACITOR-FXD 150PF +-5% 300VDC MICA 0+7	0902:	CD15FD151J03
A4A6A2C15	0160-2055	9	1	CAPACITOR-FXD .01UF +80-20% 100VDC CER		805-504 Y5V 103Z
A4A6A2C16	0160-2055	9	1	CAPACITOR-FXD .01UF +80-20% 100VDC CER		805-504 Y5V 103Z
A4A6A2C17	0160-2055	3	1	CAPACITOR-FXD .01UF +80-20% 100VDC CER		805-504 Y5V 1032
A4A6A2C18	0160-4084	3	1	CAP-FXD 0.1uF 50 V	56289	1C20X7R104M050B
A4A6A2C19	0160-4084	3	1	CAP-FXD 0.1uF 50 V	56289	1C20X7R104M050B
A4A6A2C20	0160-2055	3	1	CAPACITOR-FXD .01UF +80-20% 100VDC CER		805-504 Y5V 103Z
A4A6A2C21	0160-2207	3	1	CAP-FXD 300pF 300 V MICA	0902:	CD15FD301J03
A4A6A2C22	0140-0193	3	1	CAPACITOR-FXD 82PF +-5% 300VDC MICA -20/	0902:	CD15ED820J03
A4A6A2C23	0160-2055	9	1	CAPACITOR-FXD .01UF +80-20% 100VDC CER		805-504 Y5V 103Z
A4A6A2C24	0160-2055	9	1	CAPACITOR-FXD .01UF +80-20% 100VDC CER		805-504 Y5V 103Z
A4A6A2C27	0160-2055	9	1	CAPACITOR-FXD .01UF +80-20% 100VDC CER		805-504 Y5V 103Z
A4A6A2C28	0160-2055	9	1	CAPACITOR-FXD .01UF +80-20% 100VDC CER		805-504 Y5V 1032
A4A6A2C29	0160-2055	9	1	CAPACITOR-FXD .01UF +80-20% 100VDC CER		805-504 Y5V 103Z
A4A6A2C30	0140-0210	7	1	CAPACITOR-FXD 270PF +-5% 300VDC MICA 0+7	09023	CD15FD271J03
A4A6A2CR1	1901-0040		1	DIODE-SWITCHING 3DV 50MA 2NS DO-35	71468	
A4A6A2CR3	1901-0047	1	1	DIODE-SWITCHING 20V 75MA 10NS DO-35	71468	
A4A6A2CR5	1901-0047	1	1	DIODE-SWITCHING 20V 75MA 10NS DO-35	71468	
A4A6A2E1	9170-0029	1	1	CORE-SHIELDING BEAD	02114	56-590-65A2/4A
A4A6A2E2	9170-0029	6	1	CORE-SHIELDING BEAD	02114	56-590-65A2/4A
A4A6A2E3	9170-0029		1	CORE-SHIELDING BEAD	02114	56-590-65A2/4A
A4A6A2E4	9170-0029		1	CORE-SHIELDING BEAD	02114	56-590-65A2/4A
A4A6A2L1	9140-0111		1	INDUCTOR RF-CH-MLD 3.3UH +-10% .166D-INX	99800	1537-24
A4A6A2L4	9140-0112		1	INDUCTOR RF-CH-MLD 4.7UH +-10% .166D-INX	99800	1537-28
A4A6A2L5	9100-1625	6	1	INDUCTOR RF-CH-MLD 33UH +-5% .166D-INX.3	99800	1537-52
A4A6A2L8	9140-0112		1	INDUCTOR RF-CH-MLD 4.7UH +-10% .166D-INX	99800	1537-28
A4A6A2L9	9140-0112		1	INDUCTOR RF-CH-MLD 4.7UH +-10% .166D-INX	99800	1537-28
A4A6A2L10	9140-0114		1	INDUCTOR RF-CH-MLD 10UH +-10% .166D-INX.	99800	1537-36
A4A6A2L11	9100-1611		1	INDUCTOR RF-CH-MLD 220NH +-20% .166D-INX	99800	1537-02
A4A6A2L12	9100-2232		1	INDUCTOR RF-CH-MLD 560NH +-10% .166D-INX	24226	15M560K
A4A6A2Q1	1854-0019		1	TRANSISTOR NPN SI TO-18 PD=360MW	04713	
A4A6A2Q2	1853-0034		1	TRANSISTOR PNP SI TO-18 PD=360MW	04713	
A4A6A2Q3	1854-0019		1	TRANSISTOR NPN SI TO-18 PD=360MW	04713	
A4A6A2Q4	1854-0345	8	1	TRANSISTOR NPN 2N5179 SI TO-72 PD=200MW	04713	2N5179
A4A6A2Q5	1854-0019	3	1	TRANSISTOR NPN SI TO-18 PD=360MW	04713	
A4A6A2Q6	1854-0019	3	1	TRANSISTOR NPN SI TO-18 PD=360MW	04713	
A4A6A2Q7	1853-0007	7	1	TRANSISTOR PNP 213251 SI TO-18 PD=360MW	04713	2N3251

**Indicates factory-selected value*

HP Part Number 85662-60005

A4A6A2 Down Converter

Reference Designatior	HP Part Number	C-D	Qty	Description	Mfr Code	Mfr Part Number
A4A6A2Q8	1853-0034	(	1	TRANSISTOR PNP SI TO-18 PD=360MW	0471:	
A4A6A2R4	0698-0083	8	1	RESISTOR 1.96K 1% .125W TF TC=0+-100	19701	SFR25H
A4A6A2R11	0757-0346	,	1	RESISTOR 10 +-1% .125W TF TC=0+-100	9163;	CMF-55-1, T-l
A4A6A2R12	0757-0279	I	1	RESISTOR 3.16K +-1% .125W TF TC=0+-100	19701	SFR25H
A4A6A2R13	0757-0279	(	1	RESISTOR 3.16K +-1% .125W TF TC=0+-100	19701	SFR25H
A4A6A2R14	0757-0394	(	1	RESISTOR 51.1 +-1% .125W TF TC=0+-100	19701	SFR25H
A4A6A2R15	0757-0465	8	1	RESISTOR 100K +-1% .125W TF TC=0+-100	19701	SFR25H
A4A6A2R16	0757-0442	(	1	RESISTOR 10K +-1% .125W TF TC=0+-100	19701	SFR25H
A4A6A2R17	0757-0394	(	1	RESISTOR 51.1 +-1% .125W TF TC=0+-100	19701	SFR25H
A4A6A2R18	0757-0442	C	1	RESISTOR 10K +-1% .125W TF TC=0+-100	19701	SFR25H
A4A6A2R19	0757-0418	C	1	RESISTOR 619 +-1% .125W TF TC=0+-100	19701	SFR25H
A4A6A2R20	0698-0084	C	1	RESISTOR 2.15K 1% .125W TF TC=0+-100	19701	SFR25H
A4A6A2R22	0757-0442	C	1	RESISTOR 10K +-1% .125W TF TC=0+-100	19701	SFR25H
A4A6A2R23	0757-0279	C	1	RESISTOR 3.16K +-1% .125W TF TC=0+-100	19701	SFR25H
A4A6A2R24	0757-0346	2	1	RESISTOR 10 +-1% .125W TF TC=0+-100	91637	CMF-55-1, T-l
A4A6A2R25	0698-0084	9	1	RESISTOR 2.15K 1% .125W TF TC=0+-100	19701	SFR25H
A4A6A2R26	0757-0394	C	1	RESISTOR 51.1 +-1% .125W TF TC=0+-100	19701	SFR25H
A4A6A2R27	0698-0082	7	1	RESISTOR 464 1% .125W TF TC=0+-100	19701	SFR25H
A4A6A2R28	0757-0180	2	1	RESISTOR 31.6 +-1% .125W TF TC=0+-100	19701	SFR25H
A4A6A2R29	0698-0082	7	1	RESISTOR 464 1% .125W TF TC=0+-100	19701	SFR25H
A4A6A2R30	0757-0279	a	1	RESISTOR 3.16K +-1% .125W TF TC=0+-100	19701	SFR25H
A4A6A2R31	0757-0401	0	1	RESISTOR 100 +-1% .125W TF TC=D+-100	19701	SFR25H
A4A6A2R32	0698-3447	4	1	RESISTOR 422 1% .125W TF TC=0+-100	19701	SFR25H
A4A6A2R33*	1757-0397	3	1	7ESISTOR 68.1 +-1% .125W TF TC=0+-100	19701	SFR25H
A4A6A2R35	0757-0346	2	1	RESISTOR 10 +-1% .125W TF TC=0+-100	91637	CMF-55-1. T-l
A4A6A2R38	0757-0438	3	1	RESISTOR 5.11K +-1% .125W TF TC=0+-100	19701	SFR25H
A4A6A2R39	0757-0279	D	1	RESISTOR 3.16K +-1% .125W TF TC=0+-100	19701	SFR25H
A4A6A2R40	1757-0442	9	1	7ESISTOR 10K +-1% .125W TF TC=0+-100	19701	SFR25H
A4A6A2R41	0757-0394	D	1	RESISTOR 51.1 +-1% .125W TF TC=0+-100	19701	SFR25H
A4A6A2R42	0757-0418	9	1	RESISTOR 619 +-1% .125W TF TC=0+-100	19701	SFR25H
A4A6A2R50	0757-0346	2	1	RESISTOR 10 +-1% .125W TF TC=0+-100	91637	CMF-55-1, T-l
A4A6A2R52	0757-0280	3	1	RESISTOR 1K +-1% .125W TF TC=0+-100	19701	SFR25H
A4A6A2T1	85662-80001	3	1	COIL ASSEMBLY TRANSFORMER	28480	85662-80001
A4A6A2TP1	1251-0600	0	1	CONNECTOR-SGL CONT PIN 1.14-MM-BSC-SZ SQ	27264	16-06-0034
A4A6A2TP2	1251-0600	0	1	CONNECTOR-SGL CONT PIN 1.14-MM-BSC-SZ SQ	27264	16-06-0034
A4A6A2TP3	1251-0600	D	1	CONNECTOR-SGL CONT PIN 1.14-MM-BSC-SZ SQ	27264	16-06-0034
A4A6A2TP4	1251-0600	D	1	CONNECTOR-SGL CONT PIN 1.14-MM-BSC-SZ SQ	27264	16-06-0034
A4A6A2U1	1955-0084	5	1	J-WAVE MIXER 500 MHZ MAX	15542	SRA-1H-32
A4A6A2VR1	1902-0049	2	1	DIODE-ZNR 6.19V 5% DO-35 PD=.4W	04713	

**Indicates factory-selected value*

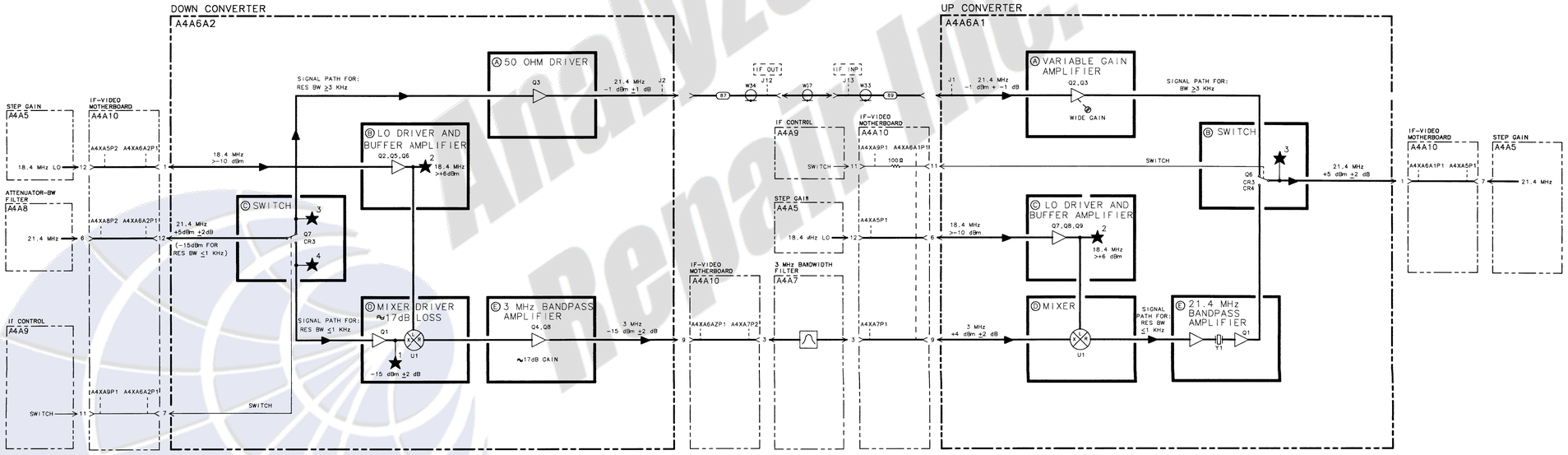

A4A6A2 DOWN CONVERTER AND A4A6A1 UP CONVERTER, BLOCK DIAGRAM

Analyzer Repair Inc.

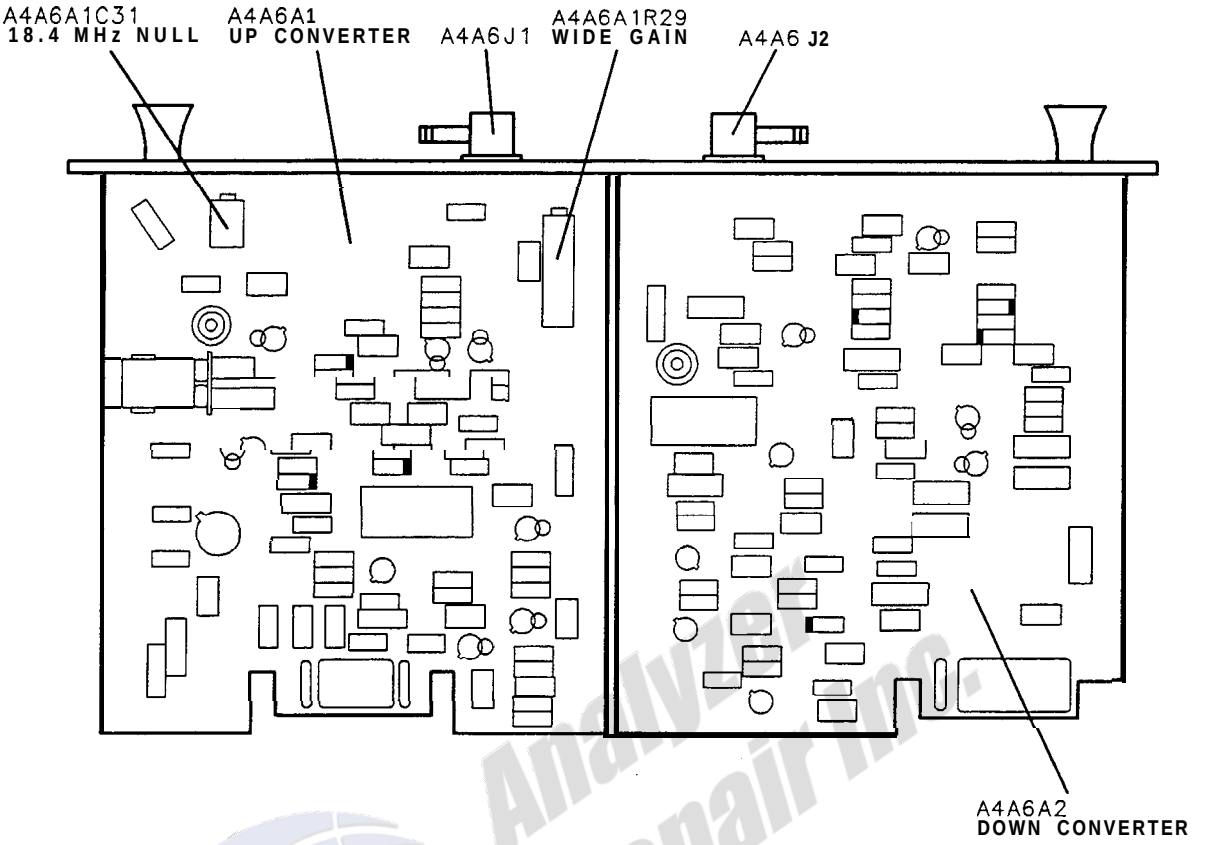

A4A6 Up/Down Converter, Assembly and Component Locations, 85662-60018

Analyzer Repair Inc.

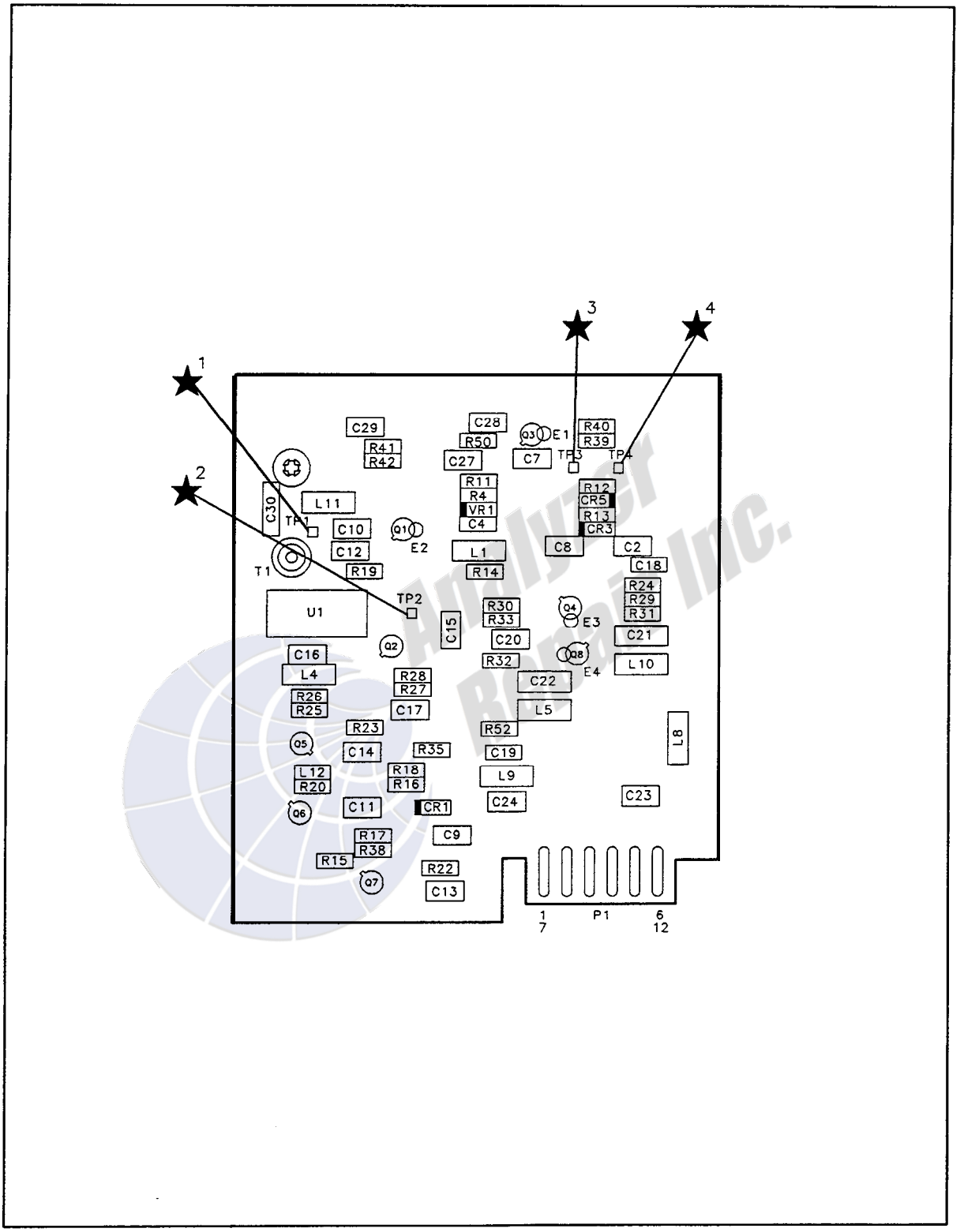

A4A6A2 Down Converter Component Locations, 85662-60005

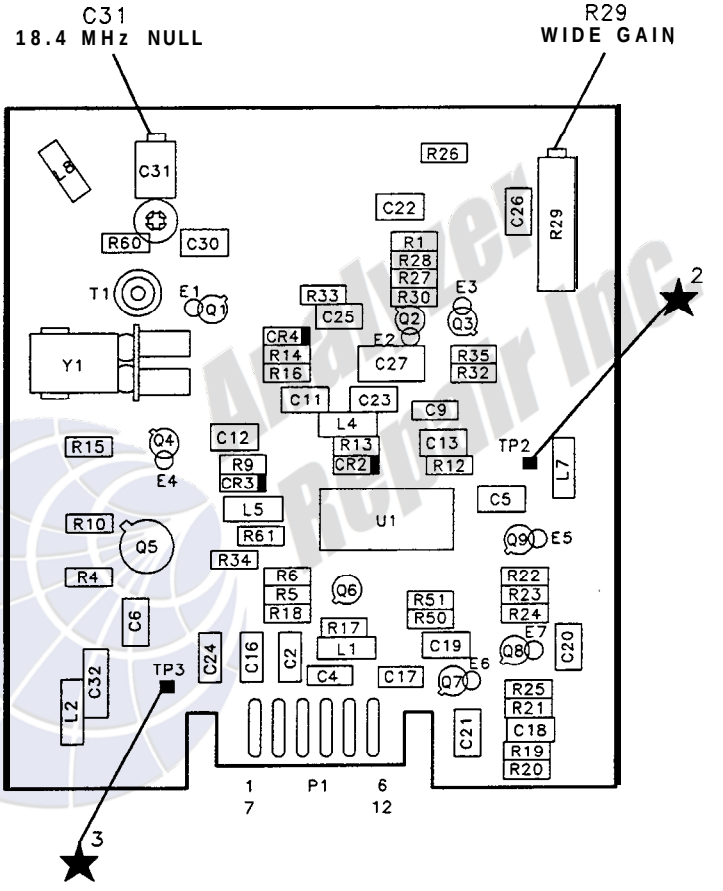

A4A6A1 Up Converter Component Locations, 85662-60006

A4A6 DOWN/UP CONVERTER
85662-60018
(SERIAL PREFIX: 2403A)

A4A6A2 DOWN CONVERTER
85662-60005

P1

PIN	SIGNAL	TO/FROM	FUNCTION BLOCK
1	18.4 MHz LO	A4A5P2-12	B
7	SWITCH	A4A5P1-11	C
2	GND		F
8	GND		F
3	GND		F
9	3MHz	A4A7P2-3	E
4	GND		F
10	-15V		F
5	GND		F
11	+15V		F
6	GND		F
12	21.4 MHz	A4A8P2-6	C

SIGNAL PATH FOR RES BW ≥3kHz

SIGNAL PATH FOR RES BW ≤1kHz

A 50 OHM DRIVER
+15VF4 · C28 .01 · R39 3160 · E1 · Q3 · R41 51.1 · C29 .01 · R40 10K

CABLE 87, W34
21.4 MHz
-10dm ±1dB
TO A4A6A1
UP CONVERTER

J2 · IF OUT J12 · IF IN J13 · W87 · W34 · W37 · W33 · W89

B LO DRIVER AND BUFFER AMPLIFIER
+13.1V RES BW≤ 1kHz
P1-1 18.4 MHz LO >-10dBm (200mV P-P)
R16 10K · C11 .01 · R17 51.1 · +6.4V · Q6 · C9 .01 · R18 10K · CR1 · C12 560nH 150pF · C14 · Q5 · R20 2150 · R23 3.16K · R25 2150 · C15 .01 · R27 464 · R26 31.6 · R28 51.1 · Q2 · R36 5110 · -15VF2
+13.9V:RES BW≤ 1kHz ~2.4V:RES BW ≥3kHz
18.4 MHz > +6dBm · C16 .01 · 2

C SWITCH
P1-7 SWITCH 0V:RES BW≤ 1kHz +14.7V:RES BW ≥3kHz · R22 10K · C13 .01 · +15VF2 · 3 · R15 100K · Q7 · C7 .01 · R12 3160 · R13 3160 · CR5 · C8 .01 · +6.1V · L1 3.3 · CR3 · 4 · C2 .01 · P1-12 21.4 MHz
21.4 MHz +6dBm (1120mV P-P) (-15dBm FOR RES BW≤ 1kHz)

D MIXER/DRIVER
+15VF2 · 21.4 MHz -15dBm (1120 mV P-P) · R14 51.1 · E2 · C12 .01 · Q1 · R19 619 · T1 · L11 .22 · C30 270pF · 1 · U1 · 3 · 4 · -27dBm · A · B · 3MHz -32dBm

E 3MHz BANDPASS AMPLIFIER
+15VF1 · +15VF1 · R29 464 · R31 100 · C21 3000F · L10 10 · E4 · Q8 · C22 82pF · L5 33 · E3 · Q4 · C20 .01 · R32 422 · R30 3160 · R33+ 68 (SEE NOTE 3) · -15VF1 · R52 1000 · P1-9 3MHz -15dBm (110mV P-P)

F POWER SUPPLIES
P1-11 +15V · L8 4.7 · C23 .01 · C18 0.1 · C10 .01 · R24 10 · R11 10 · R4 1960 · R50 10 · C27 .01 · C31 .01 · +15VF1 · +15VF2 · +15VF3 · +15VF4 · +6.1V · P1-2-5,8 GND · VR1 6.19V · -15VF1 · P1-10 -15V · L9 4.7 · C24 .01 · C19 0.1 · R35 10 · C17 .01 · -15VF2

A4A6A1 UP CONVERTER
85662-60006

CABLE 89, W33
21.4 MHz
-10dm ±1dB
FROM A4A6A2
DOWN CONVERTER

J1

P1

PIN	SIGNAL	TO/FROM	FUNCTION BLOCK
1	21.4MHz	A4A5P1-7	B
7	GND		F
2	GND		F
8	GND		F
3	GND		F
9	3MHz	A4A7P1-3	D
4	GND		F
10	GND		F
5	GND		F
11	SWITCH	A4A5P1-11	B
6	18.4MHz LO	A4A5P1-12	C
12	+15V		F

SIGNAL PATH FOR RES BW ≥3kHz

A VARIABLE GAIN AMPLIFIER
+15VF2 · R27 6810 · R30 178 · E2 · Q2 · C23 .01 · C22 .01 · R1 100 · C27 3pF · R26 51.1 · F3 · Q3 · R28 10K · R35 316 · R29 1000 · C26 .01 · R32 681 · MIDDLE GAIN

C LO DRIVER AND BUFFER AMPLIFIER
+14.6V:RES BW≤ 1kHz 2V:RES BW ≥3kHz
P1-6 18.4 MHz LO >-10dBm (200mV P-P) · C17 .01 · R17 10K · E6 · +7V · Q7 · R18 10K · C18 .01 · R19 1000 · R25 1000 · R51 16.2K · R22 31.6 · L7 4.7 · C21 .01 · 2 · 18.4 MHz >+6dBm · E5 · Q9 · C5 .01 · +10V · Q8 · E7 · +5.5V · R21 31.6 · R20 1000 · R50 10K · C19 .01 · R23 10 · R24 511 · C20 .01

D MIXER
P1-9 3MHz (100mV P-P) · C2 .01 · U1 · 4 · SIGNAL PATH FOR RES BW ≤1kHz · A · 21.4MHZ 0dBm (630 mVp-p)

B SWITCH
+15VF1 · R5 100K · Q6 · L6 .30 · CR2 · +15VF1 · R13 3160 · P1-11 SWITCH 1K:RES BW ≤1KHZ +14.7V:RES BW ≥ 3KHZ · C16 .01 · R6 5110 · R18 1330 · C9 0.1 · CR3 · L5 15 · C13 .01 · C12 .01 · CR4 · C24 .01 · R12 3160 · 3 · P1-1 21.4 MHz +6dBm (1125mV P-P)

C 21.4MHz BANDPASS AMPLIFIER
+15VF1 · R5 237 · E4 · Q4 · R14 100K · +11.9VDC · Q5 · R34 10K · R10 90.9 · R61 100 · Q6 · Q1 · C32 240pF · L2 0.22 · R4 1470 · R15 1000 · 18.4 MHz NULL · Y1 · T1 · C31 1.3-4pF · L8 5.6 · R60 511 · C30 .01 · E1 · Q1

F POWER SUPPLIES
P1-12 +15V · L1 4.7 · C4 0.1 · R33 10 · C11 .01 · C25 .01 · +15VF1 · +15VF2 · P1-2-5, 7,8 GND

NOTES:

1. REFERENCE DESIGNATORS WITHIN THIS ASSEMBLY ARE ABBREVIATED. FOR COMPLETE REFERENCE DESIGNATION, PREFIX ABBREVIATION WITH ASSEMBLY DESIGNATION.
2. UNLESS OTHERWISE INDICATED: RESISTANCE IS IN OHMS (Ω) CAPACITANCE IS IN MICROFARADS(μF) INDUCTANCE IS IN MICROHENRIES(μH)
3. A4A6R53= 10 Ω FACTORY-SELECTED COMPONENT. ASSEMBLY VALUES RANGE FROM +2.20 TO 75.0 Ω.
4. UNLESS OTHERWISE NOTED INSTRUMENT SETTINGS ARE AS FOLLOWS: INSTRUMENT PRESET; CENTER FREQUENCY . . . . . CAL. OUT FREQ. FREQUENCY SPAN. . . . . 0Hz ATTENUATION 0dB
5. ALL MEASUREMENTS ARE WITH BOARDS ON EXTENDERS. POWER LEVELS MAY BE 2dB LOWER THAN THOSE INDICATED. RF VOLTAGES MAY HAVE ±20%.
6. A4A5A1U1 AND A4A6A2 U1 PIN CONFIGURATION:
   BOTTOM VIEW
   MARKED PIN
7. UNLESS OTHERWISE INDICATED: SIGNALS ENTER AT LEFT SIDE OR TOP AND EXIT AT RIGHT OR BOTTOM SIDE OF FUNCTION BLOCKS.
8. POWER MEASUREMENTS ARE TAKEN WITH A SPECTRUM ANALYZER USING A HIGH IMPEDANCE PROBE.

A4A6

A4A6A2 DOWN CONVERTER AND A4A6A1 UP CONVERTER, SCHEMATIC DIAGRAM

A4A7

A4A7 3 MHz Bandwidth Filter, Circuit Description

A4A7 3 MHz Filter is a variable bandwidth filter centered at 3 MHz. The bandwidths are controlled from 10 Hz to 300 Hz in a 1, 3, 10 sequence by lines that have the same name as the bandwidth they activate. When none of the lines is activated, the filter has a 1 kHz bandwidth.

The filter has five poles which are almost identical. Only one is described in detail. Each pole has a negative output impedance to compensate for the series resistance of the crystal, but it is adjustable in only two poles.

4th Pole ⓓ

The basis of the buffer amplifier is a complementary feedback pair including Q9 and Q10. (See Figure 1.)

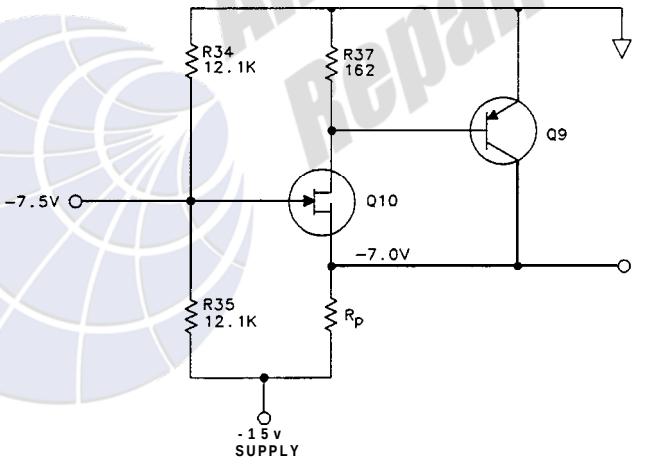

Figure 1. Complementary Feedback Pair, Simplified Schematic

The bias current through Q10 is 0.7 V/162Ω 4 mA, and the total current through Q10 plus Q9 is set by R_p to be about 20 mA. The source voltage of Q10 should always be higher than the gate voltage.

The circuit as shown in Figure 1 has no gain. R39, R36, and C26 are added (see schematic) so this stage has a gain of:

$$G = 1 + \frac{R38}{R36} \approx 1dB$$

R_p is replaced by a 20 mA current sink. (See Figure 2.)

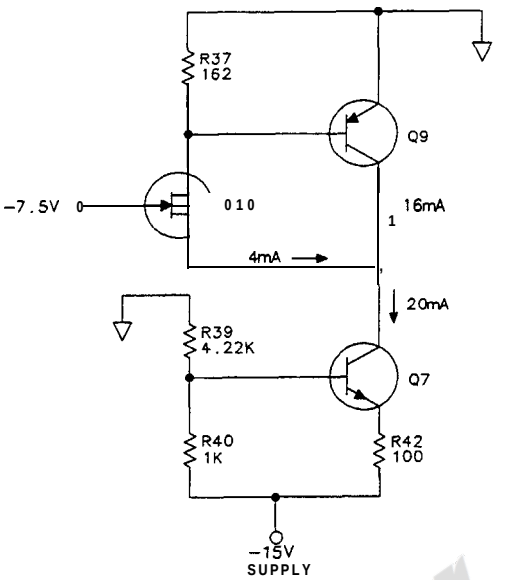

Figure 2. Complementary Pair with Current Sink

The description to this point is sufficient to understand how the circuit is biased. The 3 MHz operation is described in the following paragraphs.

Potentiometer R41 is added and the signal from the collector of Q9 is fed into the base of Q7 by C28. (See Figure 3.)

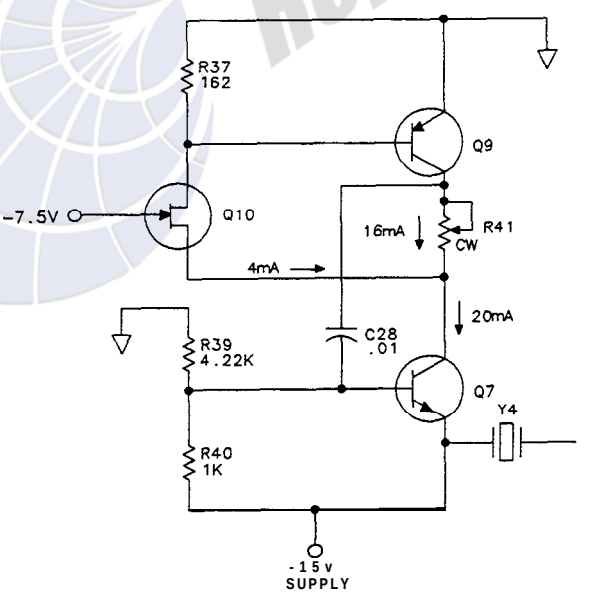

Figure 3. Buffer Amplifier with Negative Output Impedance

The circuit still operates the same because there is no load on the emitter of Q7 and hence no collector current. (Remember, this is 3 MHz AC operation.) If a load (Y4) is added to the emitter of Q7, collector current is developed and this current is fed back into the

complementary pair Q9, Q10. The sense of this current is such that the feed back is positive. The more load, the more positive feedback is developed. The more positive feedback, the more gain the amplifier has. This implies negative output impedance. The magnitude of the negative output impedance is the resistance to which R41 is set.

Q8 and the SYM cap are added to cancel the effect of the case (parallel) capacitance of the crystal. (See Figure 4.) R94, R96 and other resistors are switched in to change bandwidths. C31 and C62 (not shown) are in series with the crystal to tune the center frequency to precisely 3 MHz. The negative output impedances of the amplifier is set to compensate for the series resistance of the crystal so that as different bandwidths are selected, the amplitude (overall gain) does not change. If the relative gain of the filter assembly is too low in the 10 Hz BW, and cannot be corrected by R41 and R30, three common problems are:

- All five crystals are not tuned close enough to the same center frequency.
- The series resistance of one or more of the crystals is too high.
- The output impedance of one or more of the buffer amplifiers is not negative enough.

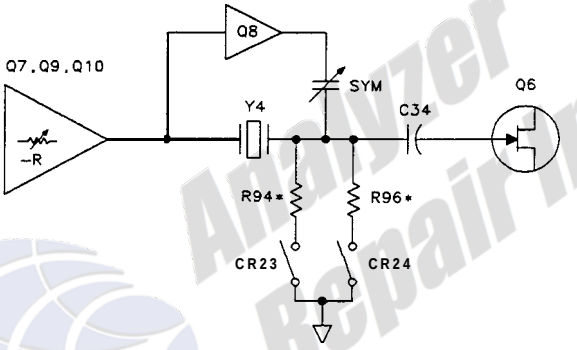

Figure 4. Fourth Pole, Equivalent Circuit

Analyzer Repair Inc.

HP Part Number 85662-60004

A4A7 3 MHz Bandwidth Filter

Reference Designatior	HP Part Number	D	Qty	Description	Mfr Code	Mfr Part Number
A4A7	85662-60004		1	BOARD ASSEMBLY, 3MHZ BANDWIDTH FILTER	2848(	85662-60004
A4A7C1	0160-2055		1	CAPACITOR-FXO .01UF +BO-20% 100VDC CER		805-504 Y5V 1032
A4A7C2	0160-2266		1	CAPACITOR-FXD 24PF +-5% 500VDC CER 0+-3(	5276:	2RDPLX05024RNP0
A4A7C3	0160-2055		1	CAPACITOR-FXD .01UF +BO-20% 100VDC CER		805-504 Y5V 1032
A4A7C4	0160-2250		1	CAP-FXD 5.1pF 500 V	5276:	
A4A7C5*	0160-4611		1	CAPACITOR-FXD 68PF +-1% 300VDC MICA -20/	09023	CD15ED680F03
A4A7C6	0121-0446		1	CAP-VAR 4.5pF 2pF 160 V	52763	302-450-502
A4A7C7	0121-0105		1	CAPACITOR-V TRMR-CER 9-35PF 2DOV PC-MTG	52763	304-324-573
A4A7C8	0160-2055		1	CAPACITOR-FXD .01UF +BO-20% 100VDC CER		805-504 Y5V 103Z
A4A7C9	0160-2055		1	CAPACITOR-FXD .01UF +BO-20% 100VDC CER		805-504 Y5V 1032
A4A7C10	0160-2055		1	CAPACITOR-FXD .01UF +BO-20% 100VDC CER		805-504 Y5V 1032
A4A7C11	0160-2250		1	CAP-FXD 5.1pF 500 V	52763	
A4A7C12*	0160-4611		1	CAPACITOR-FXD 68PF +-1% 300VDC MICA -20/	09023	CD15ED680F03
A4A7C13	0121-0493		1	CAPACITOR-V TRMR-AIR 1.7-11PF 175V PC-MI	7497c	187-0306-125
A4A7C14	0121-0446		1	CAP-VAR 4.5pF 20pF 160 V	52763	302-450-502
A4A7C15	0121-0105		1	CAPACITOR-V TRMR-CER 9-35PF 200V PC-MTG	52763	304-324-573
A4A7C16	0160-2055		1	CAPACITOR-FXD .01UF +BO-20% 100VDC CER		805-504 Y5V 1032
A4A7C17	0160-2055		1	CAPACITOR-FXD .01UF +BO-20% 100VDC CER		805-504 Y5V 1032
A4A7C18	0160-2250		1	CAP-FXD 5.1pF 500 V	52763	
A4A7C19	0160-2250		1	CAP-FXD 5.1pF 500 V	52763	
A4A7C20	0160-2055		1	CAPACITOR-FXD .01UF +BO-20% 100VDC CER		805-504 Y5V 1032
A4A7C21*	0160-4611		1	CAPACITOR-FXD 68PF +-1% 300VDC MICA -20/	09023	CD15ED680F03
A4A7C22	0121-0493		1	CAPACITOR-V TRMR-AIR 1.7-11PF 175V PC-MI	74970	187-0306-125
A4A7C23	0121-0446		1	CAP-VAR 4.5pF 20pF 160 V	52763	302-450-502
A4A7C24	0121-0105		1	CAPACITOR-V TRMR-CER 9-35PF 200V PC-MTG	52763	304-324-573
A4A7C25	0160-2055		1	CAPACITOR-FXD .01UF +80-20% 100VDC CER		805-504 Y5V 1032
A4A7C26	0160-2055		1	CAPACITOR-FXD .01UF +BO-20% 100VDC CER		805-504 Y5V 1032
A4A7C27	0160-2250		1	CAP-FXD 5.1pF 500 V	52763	
A4A7C28	0160-2055		1	CAPACITOR-FXD .01UF +BO-20% 100VDC CER		805-504 Y5V 1032
A4A7C29	0160-2250		1	CAP-FXD 5.1pF 500 V	52763	
A4A7C30*	0160-4611		1	CAPACITOR-FXD 68PF +-1% 3DOVDC MICA -20/	09023	CD15ED680F03
A4A7C31	0121-0493		1	CAPACITOR-V TRMR-AIR 1.7-11PF 175V PC-MT	74970	187-0306-125
A4A7C32	0121-0446		1	CAP-VAR 4.5pF 20pF 160 V	52763	302-450-502
A4A7C33	0121-0105		1	CAPACITOR-V TRMR-CER 9-35PF 200V PC-MTG	52763	304-324-573
A4A7C34	)160-2055		1	:APACITDR-FXD .01UF +BO-20% 100VDC CER		805-504 Y5V 1032
A4A7C35	)160-2055		1	:APACITDR-FXD .01UF +BO-20% 100VDC CER		805-504 Y5V 1032
A4A7C36	)160-2250		1	:AP-FXD 5.1pF 500 V	52763	
A4A7C37	)160-2055		1	:APACITOR-FXD .01UF +80-20% 100VDC CER		805-504 Y5V 1032
A4A7C38	)160-2250		1	:AP-FXD 5.1pF 500 V	52763	
A4A7C39*	)160-4611		1	:APACITDR-FXD 68PF +-1% 3DOVDC MICA -201	09023	CD15ED680F03
A4A7C40	)121-0493		1	:APACITOR-V TRMR-AIR 1.7-11PF 175V PC-MT	74970	187-0306-125
A4A7C41	)121-0446		1	:AP-VAR 4.5pF 20pF 160 V	52763	302-450-502
A4A7C42	1121-0105		1	:APACITOR-V TRMR-CER 9-35PF 200V PC-MTG	52763	304-324-573
A4A7C43	)160-2055		1	:APACITOR-FXD .01UF +BO-20% 100VDC CER		805-504 Y5V 1032
A4A7C44	)160-2244		1	:AP-FXD 3pF 500 V	52763	
A4A7C45	)160-2055		1	:APACITOR-FXD .01UF +BO-20% 100VDC CER		805-504 Y5V 1032
A4A7C46	)160-2055		1	:APACITOR-FXD .01UF +BO-20% 100VDC CER		805-504 Y5V 1032

**Indicates factory-selected value*

HP Part Number 85662-60004

A4A7 3 MHz Bandwidth Filter

Reference Designatior	HP Part Number	C D	Qty	Description	Mfr Code	Mfr Part Number
A4A7C47	0160-2244		1	CAP-FXD 3pF 500 V	5276.	
A4A7C48	0160-4300		1	CAPACITOR-FXD .047UF +80-20% 100VDC CER		562CZC101AL473ZA26
A4A7C49	0180-0197		1	CAPACITOR-FXD 2.2UF+-10% 20VDC TA	5628	150D225X9020A2-DYS
A4A7C50	0180-0197		1	CAPACITOR-FXD 2.2UF+-10% LOVDC TA	5628	150D225X9020A2-DYS
A4A7C51	0180-0197		1	CAPACITOR-FXD 2.2UF+-10% 20VDC TA	5628	150D225X9020A2-DYS
A4A7C52	0180-0197		1	CAPACITOR-FXD 2.2UF+-10% 20VDC TA	5628	150D225X9020A2-DYS
A4A7C53	0180-0197		1	CAPACITOR-FXD 2.2UF+-10% 20VDC TA	5628	150D225X9020A2-DYS
A4A7C54	0180-0197		1	CAPACITOR-FXD 2.2UF+-10% 20VDC TA	5628	150D225X9020A2-DYS
A4A7C55	0160-2055		1	CAPACITOR-FXD .01UF +80-20% 100VDC CER		805-504 Y5V 103Z
A4A7C56	0160-2055		1	CAPACITOR-FXD .01UF +80-20% 100VDC CER		805-504 Y5V 1032
A4A7C57	0160-4300		1	CAPACITOR-FXD .047UF +80-20% 100VDC CER		562CZC101AL473ZA26
A4A7C58	0160-4297		1	CAPACITOR-FXD .022UF +80-20% 100VDC CER		562CZC101AH223ZA23
A4A7C59	0160-2055		1	CAPACITOR-FXD .01UF +80-20% 100VDC CER		805-504 Y5V 1032
A4A7C60	0160-2055		1	CAPACITOR-FXD .01UF +80-20% 100VDC CER		805-504 Y5V 103Z
A4A7C61	0160-2055		1	CAPACITOR-FXD .01UF +80-20% 100VDC CER		805-504 Y5V 103Z
A4A7C62	3160-2055		1	CAPACITOR-FXD .01UF +80-20% 100VDC CER		805-504 Y5V 1032
A4A7C63	3160-4300		1	CAPACITOR-FXD .047UF +80-20% 100VDC CER		562CZC101AL473ZA26
A4A7C64	3160-4297		1	CAPACITOR-FXD .022UF +80-20% 100VDC CER		562CZC101AH223ZA23
A4A7C65	0160-2055		1	CAPACITOR-FXD .01UF +80-20% 100VDC CER		805-504 Y5V 1032
A4A7C66	1160-2055		1	CAPACITOR-FXD .01UF +80-20% 100VDC CER		805-504 Y5V 1032
A4A7C67	1160-2055		1	CAPACITOR-FXD .01UF +80-20% 100VDC CER		805-504 Y5V 1032
A4A7C68	0160-2055		1	CAPACITOR-FXD .01UF +80-20% 100VDC CER		805-504 Y5V 1032
A4A7C69	0160-4300		1	CAPACITOR-FXD .047UF +80-20% 100VDC CER		562CZC101AL473ZA26
A4A7C70	0160-4297		1	CAPACITOR-FXD .022UF +80-20% 100VDC CER		562CZC101AH223ZA23
A4A7C71	0160-2055		1	CAPACITOR-FXD .01UF +80-20% 100VDC CER		805-504 Y5V 1032
A4A7C72	0160-2055		1	CAPACITOR-FXD .01UF +80-20% 100VDC CER		805-504 Y5V 1032
A4A7C73	0160-2055		1	CAPACITOR-FXD .01UF +80-20% 100VDC CER		805-504 Y5V 1032
A4A7C74	0160-2055		1	CAPACITOR-FXD .01UF +80-20% 100VDC CER		805-504 Y5V 1032
A4A7C75	0160-4300		1	CAPACITOR-FXD .047UF +80-20% 100VDC CER		562CZC101AL473ZA26
A4A7C76	3160-4297		1	CAPACITOR-FXD .022UF +80-20% 100VDC CER		562CZC101AH223ZA23
A4A7C77	0160-2055		1	CAPACITOR-FXD .01UF +80-20% 100VDC CER		805-504 Y5V 1032
A4A7C78	0160-2055		1	CAPACITOR-FXD .01UF +80-20% IOOVDC CER		805-504 Y5V 1032
A4A7C79	1160-2055		1	CAPACITOR-FXD .01UF +80-20% 100VDC CER		805-504 Y5V 1032
A4A7C80	1160-2055		1	"APACITOR-FXD .01UF +80-20% IOOVDC CER		805-504 Y5V 1032
A4A7C81	1160-4300		1	CAPACITOR-FXD .047UF +80-20% 100VDC CER		562CZC101AL473ZA26
A4A7C82	0160-4297		1	:APACITDR-FXD .022UF +80-20% 100VDC CER		562CZC101AH223ZA23
A4A7C83	0160-2055		1	CAPACITOR-FXD .01UF +80-20% IOOVDC CER		805-504 Y5V 103Z
A4A7C84	0160-2055		1	CAPACITOR-FXD .01UF +80-20% 100VDC CER		805-504 Y5V 1032
A4A7C85	0160-4300		1	CAPACITOR-FXD .047UF +80-20% IOOVDC CER		562CZC101AL473ZA26
A4A7C86	1160-4300		1	CAPACITOR-FXD .047UF +80-20% 100VDC CER		562CZC101AL473ZA26
A4A7C87	0160-4300		1	CAPACITOR-FXD .047UF +80-20% 100VDC CER		562CZC101AL473ZA26
A4A7C88	0160-4300		1	CAPACITOR-FXD .047UF +80-20% 100VDC CER		562CZC101AL473ZA26
A4A7C89	0160-4300		1	CAPACITOR-FXD .047UF +80-20% 100VDC CER		562CZC101AL473ZA26
A4A7C90	1160-4300		1	:APACITDR-FXD .047UF +80-20% IOOVDC CER		562CZC101AL473ZA26
A4A7C91	1160-4300		1	CAPACITOR-FXD .047UF +80-20% 100VDC CER		562CZC101AL473ZA26
A4A7C92	0160-4300		1	CAPACITOR-FXD .047UF +80-20% 100VDC CER		562CZC101AL473ZA26
A4A7C93*	0160-2252		1	:AP-FXD 6.2pF 500 V	52763	
A4A7CR1	901-0040		1	DIODE-SWITCHING 30V 50MA 2NS DO-35	71468	

Indicates factory-selected value

HP Part Number 85662-60004

A4A7 3 MHz Bandwidth Filter

Reference Designatior	HP Part Number	C D	Qty	Description	Mfr Code	Mfr Part Number
A4A7CR2	1901-0040	1	1	DIODE-SWITCHING 30V 50MA 2NS DO-35	71468	
A4A7CR3	1901-0040	1	1	DIODE-SWITCHING 30V 50MA 2NS DO-35	71468	
A4A7CR4	1901-0040	1	1	DIODE-SWITCHING 30V 50MA 2NS DO-35	71468	
A4A7CR5	1901-0040	1	1	DIODE-SWITCHING 30V 50MA 2NS DO-35	71468	
A4A7CR6	1901-0040	1	1	DIODE-SWITCHING 30V 50MA 2NS DO-35	71468	
A4A7CR7	1901-0040	1	1	DIODE-SWITCHING 30V 50MA 2NS DO-35	71468	
A4A7CR8	1901-0040	1	1	DIODE-SWITCHING 30V 50MA 2NS DO-35	71468	
A4A7CR9	1901-0040	1	1	DIODE-SWITCHING 30V 50MA 2NS DO-35	71468	
A4A7CR10	1901-0040	1	1	DIODE-SWITCHING 30V 50MA 2NS DO-35	71468	
A4A7CR11	1901-0040	1	1	DIODE-SWITCHING 30V 50MA 2NS DO-35	71468	
A4A7CR12	1901-0040	1	1	DIODE-SWITCHING 30V 50MA 2NS DO-35	71468	
A4A7CR13	1901-0040	1	1	DIODE-SWITCHING 30V 50MA 2NS DO-35	71468	
A4A7CR14	1901-0040	1	1	DIODE-SWITCHING 30V 50MA 2NS DO-35	71468	
A4A7CR15	1901-0040	1	1	DIODE-SWITCHING 30V 50MA 2NS DO-35	71468	
A4A7CR16	1901-0040	1	1	DIODE-SWITCHING 30V 50MA 2NS DO-35	71468	
A4A7CR17	1901-0040	1	1	DIODE-SWITCHING 30V 50MA 2NS DO-35	71468	
A4A7CR18	1901-0040	1	1	DIODE-SWITCHING 30V 50MA 2NS DO-35	71468	
A4A7CR19	1901-0040	1	1	DIODE-SWITCHING 30V 50MA 2NS DO-35	71468	
A4A7CR20	1901-0040	1	1	DIODE-SWITCHING 30V 50MA 2NS DO-35	71468	
A4A7CR21	1901-0040	1	1	DIODE-SWITCHING 30V 50MA 2NS DO-35	71468	
A4A7CR22	1901-0040	1	1	DIODE-SWITCHING 30V 50MA 2NS DO-35	71468	
A4A7CR23	1901-0040	1	1	DIODE-SWITCHING 30V 50MA 2NS DO-35	71468	
A4A7CR24	1901-0040	1	1	DIODE-SWITCHING 30V 50MA 2NS DO-35	71468	
A4A7CR25	1901-0040	1	1	DIODE-SWITCHING 30V 50MA 2NS DO-35	71468	
A4A7CR26	1901-0040	1	1	DIODE-SWITCHING 30V 50MA 2NS 00-35	71468	
A4A7CR27	1901-0040	1	1	DIODE-SWITCHING 30V 50MA 2NS DO-35	71468	
A4A7CR28	1901-0040	1	1	DIODE-SWITCHING 30V 50MA 2NS DO-35	71468	
A4A7CR29	1901-0040	1	1	DIODE-SWITCHING 30V 50MA 2NS DO-35	71468	
A4A7CR30	1901-0040	1	1	DIODE-SWITCHING 30V 50MA 2NS DO-35	71468	
A4A7E1	1170-0029	3	1	CORE-SHIELDING BEAD	02114	56-590-65A2/4A
A4A7E2	1170-0029	3	1	CORE-SHIELDING BEAD	02114	56-590-65A2/4A
A4A7E3	1170-0029	3	1	CORE-SHIELDING BEAD	02114	56-590-65A2/4A
A4A7E4	1170-0029	3	1	CORE-SHIELDING BEAD	02114	56-590-65A2/4A
A4A7E5	1170-0029	3	1	CORE-SHIELDING BEAD	02114	56-590-65A2/4A
A4A7E6	1170-0029	3	1	CORE-SHIELDING BEAD	02114	56-590-65A2/4A
A4A7E7	1170-0029	3	1	CORE-SHIELDING BEAD	02114	56-590-65A2/4A
A4A7E8	1170-0029	3	1	CORE-SHIELDING BEAD	02114	56-590-65A2/4A
A4A7E9	1170-0029	3	1	CORE-SHIELDING BEAD	02114	56-590-65A2/4A
A4A7E10	1170-0029	3	1	CORE-SHIELDING BEAD	02114	56-590-65A2/4A
A4A7E11	1170-0029	3	1	CORE-SHIELDING BEAD	02114	56-590-65A2/4A
A4A7E12	1170-0029	3	1	CORE-SHIELDING BEAD	02114	56-590-65A2/4A
A4A7E13	1170-0029	3	1	CORE-SHIELDING BEAD	02114	56-590-65A2/4A
A4A7E14	1170-0029	3	1	CORE-SHIELDING BEAD	02114	56-590-65A2/4A
A4A7E15	1170-0029	3	1	:ORE-SHIELDING BEAD	02114	56-590-65A2/4A
A4A7E16	1170-0029	3	1	:ORE-SHIELDING BEAD	02114	56-590-65A2/4A
A4A7E17	170-0029	3	1	CORE-SHIELDING BEAD	02114	56-590-65A2/4A
A4A7E18	170-0029	3	1	CORE-SHIELDING BEAD	02114	56-590-65A2/4A

**Indicates factory-selected value*

HP Part Number 85662-60004
A4A7 3 MHz Bandwidth Filter

Reference Designatior	HP Part Number	C D	Qty	Description	Mfr Code	Mfr Part Number
A4A7E19	9170-0029		1	CORE-SHIELDING BEAD	02114	56-590-65A2/4A
A4A7E20	9170-0029		1	CORE-SHIELDING BEAD	02114	56-590-65A2/4A
A4A7E21	9170-0029		1	CORE-SHIELDING BEAD	02114	56-590-65A2/4A
A4A7E22	9170-0029		1	CORE-SHIELDING BEAD	02114	56-590-65A2/4A
A4A7L1	9100-1643	4	1	INDUCTOR RF-CH-MLD 300UH +-5% .2D-INX.45	99800	2500-02
A4A7L2	9100-1648	4	1	INDUCTOR RF-CH-MLD 560UH +-5% .2D-INX.45	99800	2500-16
A4A7L3	9100-1629	4	1	INDUCTOR RF-CH-MLD 47UH +-5% .166D-INX.3	99800	1537-60
A4A7L4	9100-1643	2	1	INDUCTOR RF-CH-MLD 300UH +-5% .2D-INX.45	99800	2500-02
A4A7L5	9100-1648	7	1	INDUCTOR RF-CH-MLD 560UH +-5% .2D-INX.45	99800	2500-16
A4A7L6	9100-1629	4	1	INDUCTOR RF-CH-MLD 47UH +-5% .166D-INX.3	99800	1537-60
A4A7L7	9100-1643	2	1	INDUCTOR RF-CH-MLO 300UH +-5% .2D-INX.45	99800	2500-02
A4A7L8	9100-1648	7	1	INDUCTOR RF-CH-MLD 560UH +-5% .2D-INX.45	99800	2500-16
A4A7L9	9100-1629	4	1	INDUCTOR RF-CH-MLD 47UH +-5% .166D-INX.3	99800	1537-60
A4A7L10	9100-1643	2	1	INDUCTOR RF-CH-MLD 300UH +-5% .2D-INX.45	99800	2500-02
A4A7L11	9100-1648	7	1	INDUCTOR RF-CH-MLD 560UH +-5% .2D-INX.45	99800	2500-16
A4A7L12	9100-1629	4	1	INDUCTOR RF-CH-MLD 47UH +-5% .166D-INX.3	99800	1537-60
A4A7L13	9100-1643	2	1	INDUCTOR RF-CH-MLD 300UH +-5% .2D-INX.45	99800	2500-02
A4A7L14	9100-1648	7	1	INDUCTOR RF-CH-MLD 560UH +-5% .2D-INX.45	99800	2500-16
A4A7L15	9100-1629	4	1	INDUCTOR RF-CH-MLD 47UH +-5% .166D-INX.3	99800	1537-60
A4A7L16	9100-1643	2	1	INDUCTOR RF-CH-MLD 300UH +-5% .2D-INX.45	99800	2500-02
A4A7L17	3140-0114	4	1	INDUCTOR RF-CH-MLD 10UH +-10% .166D-INX.	99800	1537-36
A4A7L18	9140-0114	4	1	INDUCTOR RF-CH-MLD 10UH +-10% .166D-INX.	99800	1537-36
A4A7L19	3140-0114	4	1	INDUCTOR RF-CH-MLD 10UH +-10% .166D-INX.	99800	1537-36
A4A7L20	3140-0114	4	1	INDUCTOR RF-CH-MLD 10UH +-10% .166D-INX.	99800	1537-36
A4A7L21	9140-0114	4	1	INDUCTOR RF-CH-MLD 10UH +-10% .166D-INX.	99800	1537-36
A4A7L22	9140-0114	4	1	INDUCTOR RF-CH-MLO 10UH +-10% .166D-INX.	99800	1537-36
A4A7MP2				NOT ASSIGNED		
A4A7MP4	5960-0069	3	1	PLUG-HOLE CNCL-HD FOR .125-D-HOLE NYL	02768	207-080501-00-0101
A4A7MP5	5960-0069	3	1	PLUG-HOLE CNCL-HD FOR .125-D-HOLE NYL	02768	207-080501-00-0101
A4A7Q1	1853-0034	0	1	TRANSISTOR PNP SI TO-18 PD=360MW	04713	
A4A7Q2	1855-0081	1	1	TRANSISTOR J-FET N-CHAN D-MODE SI	34677	
A4A7Q3	1854-0882	8	1	TRANSISTOR NPN PD=300MW FT=200MHZ	56289	
A4A7Q4	1854-0023	9	1	TRANSISTOR NPN SI TO-18 PD=360MW	25403	
A4A7Q5	1853-0034	0	1	TRANSISTOR PNP SI TO-18 PD=360MW	04713	
A4A7Q6	1855-0081	1	1	TRANSISTOR J-FET N-CHAN D-MODE SI	34677	
A4A7Q7	1854-0882	8	1	TRANSISTOR NPN PD=300MW FT=200MHZ	56289	
A4A7Q8	1854-0023	9	1	TRANSISTOR NPN SI TO-18 PD=360MW	25403	
A4A7Q9	1853-0034	0	1	TRANSISTOR PNP SI TO-18 PD=360MW	04713	
A4A7Q10	1855-0081	1	1	TRANSISTOR J-FET N-CHAN D-MODE SI	34677	
A4A7Q11	1854-0882	8	1	TRANSISTOR NPN PD=300MW FT=200MHZ	56289	
A4A7Q12	1854-0023	9	1	TRANSISTOR NPN SI TO-18 PD=360MW	25403	
A4A7Q13	1853-0034	0	1	TRANSISTOR PNP SI TO-18 PD=360MW	04713	
A4A7Q14	1855-0081	1	1	TRANSISTOR J-FET N-CHAN D-MODE SI	34677	
A4A7Q15	1854-0882	8	1	TRANSISTOR NPN PD=300MW FT=200MHZ	56289	
A4A7Q16	1854-0023	9	1	TRANSISTOR NPN SI TO-18 PD=360MW	25403	
A4A7Q17	1853-0034	0	1	TRANSISTOR PNP SI TO-18 PD=360MW	04713	
A4A7Q18	1855-0081	1	1	TRANSISTOR J-FET N-CHAN D-MODE SI	34677	
A4A7Q19	1854-0023	9	1	TRANSISTOR NPN SI TO-18 PD=360MW	25403	

**Indicates factory-selected value*

HP Part Number 85662-60004

A4A7 3 MHz Bandwidth Filter

Reference Designatior	HP Part Number	C. D	Qty	Description	Mfr Code	Mfr Part Number
A4A7Q20	1854-0882		1	TRANSISTOR NPN PD=300MW FT=200MHZ	5628	
A4A7Q21	1853-0034		1	TRANSISTOR PNP SI TO-18 PD=360MW	0471:	
A4A7Q22	1854-0345		1	TRANSISTOR NPN 2N5179 SI TO-72 PD=200MW	0471:	2N5179
A4A7R1	0757-0441		1	RESISTOR 8.25K +-1% .125W TF TC=0+-100	19701	SFR25H
A4A7R2	0757-0442		1	RESISTOR 10K +-1% .125W TF TC=0+-100	19701	SFR25H
A4A7R3	0757-0346		1	RESISTOR 10 +-1% .125W TF TC=0+-100	91631	CMF-55-1, T-l
A4A7R4	0757-0401		1	RESISTOR 100 +-1% .125W TF TC=0+-100	19701	SFR25H
A4A7R5	0757-0394		1	RESISTOR 51.1 +-1% .125W TF TC=0+-100	19701	SFR25H
A4A7R6	0698-3154		1	RESISTOR 4.221: 1% .125W TF TC=0+-100	19701	SFR25H
A4A7R7	0757-0280		1	RESISTOR 1K +-1% .125W TF TC=0+-100	19701	SFR25H
A4A7R8	0757-0346		1	RESISTOR 10 +-1% .125W TF TC=0+-100	91637	CMF-55-1. T-l
A4A7R9	0757-0397		1	RESISTOR 68.1 +-1% .125W TF TC=0+-100	19701	SFR25H
A4A7R10	0698-3447		1	RESISTOR 422 1% .125W TF TC=0+-100	19701	SFR25H
A4A7R11	0757-0420		1	RESISTOR 750 +-1% .125W TF TC=0+-100	19701	SFR25H
A4A7R12*	0757-0444		1	RESISTOR 12.1K +-1% .125W TF TC=0+-100	19701	SFR25H
A4A7R13*	0757-0444		1	RESISTOR 12.1K +-1% .125W TF TC=0+-100	19701	SFR25H
A4A7R14	0757-0401		1	RESISTOR 100 +-1% .125W TF TC=0+-100	19701	SFR25H
A4A7R15	0757-0405		1	RESISTOR 162 +-1% .125W TF TC=0+-100	19701	SFR25H
A4A7R16	0757-0394		1	RESISTOR 51.1 +-1% .125W TF TC=0+-100	19701	SFR25H
A4A7R17	0698-3154		1	RESISTOR 4.22K 1% .125W TF TC=0+-100	19701	SFR25H
A4A7R18	0757-0280		1	RESISTOR 1K +-1% .125W TF TC=0+-100	19701	SFR25H
A4A7R19	0757-0346		1	RESISTOR 10 +-1% .125W TF TC=0+-100	91637	CMF-55-l. T-l
A4A7R20	0757-0401		1	RESISTOR 100 +-1% .125W TF TC=0+-100	19701	SFR25H
A4A7R21	0698-3447		1	RESISTOR 422 1% .125W TF TC=0+-100	19701	SFR25H
A4A7R22	0757-0420		1	RESISTOR 750 +-1% .125W TF TC=0+-100	19701	SFR25H
A4A7R23*	0757-0444		1	RESISTOR 12.1K +-1% .125W TF TC=0+-100	19701	SFR25H
A4A7R24*	0757-0444		1	RESISTOR 12.1K +-1% .125W TF TC=0+-100	19701	SFR25H
A4A7R25	0757-0416		1	RESISTOR 511 +-1% .125W TF TC=0+-100	19701	SFR25H
A4A7R26	0757-0405		1	RESISTOR 162 +-1% .125W TF TC=0+-100	19701	SFR25H
A4A7R27	0757-0394		1	RESISTOR 51.1 +-1% .125W TF TC=0+-100	19701	SFR25H
A4A7R28	)698-3154		1	RESISTOR 4.221: 1% .125W TF TC=0+-100	19701	SFR25H
A4A7R29	)757-0280		1	RESISTOR 1K +-1% .125W TF TC=0+-100	19701	SFR25H
A4A7R30	)100-3426		1	IESISTOR-TRMR 20 10% TKF SIDE-ADJ l-TRN	32997	3386X-Y46-200
A4A7R31	)757-0401		1	RESISTOR 100 +-1% .125W TF TC=0+-100	19701	SFR25H
A4A7R32	)698-3447		1	RESISTOR 422 1% .125W TF TC=0+-100	19701	SFR25H
A4A7R33	)757-0420		1	RESISTOR 750 +-1% .125W TF TC=0+-100	19701	SFR25H
A4A7R34*	)757-0444		1	RESISTOR 12.1K +-1% .125W TF TC=0+-100	19701	SFR25H
A4A7R35*	)757-0444		1	RESISTOR 12.1K +-1% .125W TF TC=0+-100	19701	SFR25H
A4A7R36	)757-0416		1	RESISTOR 511 +-1% .125W TF TC=0+-100	19701	SFR25H
A4A7R37	)757-0405		1	RESISTOR 162 +-1% .125W TF TC=0+-100	19701	SFR25H
A4A7R38	)757-0394		1	RESISTOR 51.1 +-1% .125W TF TC=0+-100	19701	SFR25H
A4A7R39	)698-3154		1	RESISTOR 4.22K 1% .125W TF TC=0+-100	19701	SFR25H
A4A7R40	)757-0280		1	RESISTOR 1K +-1% .125W TF TC=0+-100	19701	SFR25H
A4A7R41	)100-3426		1	IESISTOR-TRMR 20 10% TKF SIDE-ADJ l-TRN	32997	3386X-Y46-200
A4A7R42	)757-0401		1	RESISTOR 100 +-1% .125W TF TC=0+-100	19701	SFR25H
A4A7R43	)698-3447		1	RESISTOR 422 1% .125W TF TC=0+-100	19701	SFR25H
A4A7R44	)757-0420		1	RESISTOR 750 +-1% .125W TF TC=0+-100	19701	SFR25H

**Indicates factory-selected value*

HP Part Number 85662-60004

A4A7 3 MHz Bandwidth Filter

Reference Designatio	HP Part Number	C D	Qty	Description	Mfr Code	Mfr Part Number
A4A7R45*	0757-0444		1	RESISTOR 12.1K +-1% .125W TF TC=0+-100	1970	SFR25H
A4A7R46*	0757-0444		1	RESISTOR 12.1K +-1% .125W TF TC=0+-100	1970	SFR25H
A4A7R47	0757-0416		1	RESISTOR 511 +-1% .125W TF TC=0+-100	1970	SFR25H
A4A7R48	0757-0405		1	RESISTOR 162 +-1% .125W TF TC=0+-100	1970	SFR25H
A4A7R49	0757-0394		1	RESISTOR 51.1 +-1% .125W TF TC=0+-100	1970.	SFR25H
A4A7R50	0698-3154		1	RESISTOR 4.22K 1% .125W TF TC=0+-100	1970:	SFR25H
A4A7R51	0757-0280		1	RESISTOR 1K +-1% .125W TF TC=0+-100	1970:	SFR25H
A4A7R52	0757-0346		1	RESISTOR 10 +-1% .125W TF TC=0+-100	9163;	CMF-55-1, T-1
A4A7R53	0757-0401		1	RESISTOR 100 +-1% .125W TF TC=0+-100	1970:	SFR25H
A4A7R54	0698-3447		1	RESISTOR 422 1% .125W TF TC=0+-100	1970:	SFR25H
A4A7R55	0757-0420		1	RESISTOR 750 +-1% .125W TF TC=0+-100	19701	SFR25H
A4A7R56*	0757-0443		1	RESISTOR 11K +-1% .125W TF TC=0+-100	19701	SFR25H
A4A7R57*	0757-0443		1	RESISTOR 11K +-1% .125W TF TC=0+-100	19701	SFR25H
A4A7R58	0757-0405		1	RESISTOR 162 +-1% .125W TF TC=0+-100	19701	SFR25H
A4A7R59	3698-3438		1	RESISTOR 147 1% .125W TF TC=0+-100	19701	SFR25H
A4A7R60*	3698-3435		1	RESISTOR 38.3 1% .125W TF TC=0+-100	19701	SFR25H
A4A7R61	3698-3447		1	RESISTOR 422 1% .125W TF TC=0+-100	19701	SFR25H
A4A7R62	1698-3435		1	RESISTOR 38.3 1% .125W TF TC=0+-100	19701	SFR25H
A4A7R63	1757-0401		1	RESISTOR 100 +-1% .125W TF TC=0+-100	19701	SFR25H
A4A7R64	)757-0401		1	RESISTOR 100 +-1% .125W TF TC=0+-100	19701	SFR25H
A4A7R65	)757-0401		1	RESISTOR 100 +-1% .125W TF TC=0+-100	19701	SFR25H
A4A7R66*	)757-0394		1	RESISTOR 51.1 +-1% .125W TF TC=0+-100	19701	SFR25H
A4A7R67	)698-3443		1	RESISTOR 287 1% .125W TF TC=0+-100	19701	SFR25H
A4A7R68*	)698-3437		1	RESISTOR 133 1% .125W TF TC=0+-100	19701	SFR25H
A4A7R69	)698-0082		1	RESISTOR 464 1% .125W TF TC=0+-100	19701	SFR25H
A4A7R70*	)698-0082		1	RESISTOR 464 1% .125W TF TC=0+-100	19701	SFR25H
A4A7R71	)757-0416		1	RESISTOR 511 +-1% .125W TF TC=0+-100	19701	SFR25H
A4A7R72*	)698-0083		1	RESISTOR 1.96K 1% .125W TF TC=0+-100	19701	SFR25H
A4A7R73	1757-0416		1	RESISTOR 511 +-1% .125W TF TC=0+-100	19701	SFR25H
A4A7R74*	1757-0395		1	RESISTOR 56.2 +-1% .125W TF TC=0+-100	19701	SFR25H
A4A7R75	)698-3443		1	RESISTOR 287 1% .125W TF TC=0+-100	19701	SFR25H
A4A7R76*	)698-3437		1	RESISTOR 133 1% .125W TF TC=0+-100	19701	SFR25H
A4A7R77	1698-0082		1	RESISTOR 464 1% .125W TF TC=0+-100	19701	SFR25H
A4A7R78*	)698-0082		1	RESISTOR 464 1% .125W TF TC=0+-100	19701	SFR25H
A4A7R79	)757-0416		1	RESISTOR 511 +-1% .125W TF TC=0+-100	19701	SFR25H
A4A7R80*	)698-0083		1	RESISTOR 1.96K 1% .125W TF TC=0+-100	19701	SFR25H
A4A7R81	)757-0416		1	RESISTOR 511 +-1% .125W TF TC=0+-100	19701	SFR25H
A4A7R82*	)757-0395		1	RESISTOR 56.2 +-1% .125W TF TC=0+-100	19701	SFR25H
A4A7R83	)698-3443		1	RESISTOR 287 1% .125W TF TC=0+-100	19701	SFR25H
A4A7R84*	698-3437		1	RESISTOR 133 1% .125W TF TC=0+-100	19701	SFR25H
A4A7R85	698-0082		1	RESISTOR 464 1% .125W TF TC=0+-100	19701	SFR25H
A4A7R86*	757-0416		1	RESISTOR 511 +-1% .125W TF TC=0+-100	19701	SFR25H
A4A7R87	757-0416		1	RESISTOR 511 +-1% .125W TF TC=0+-100	19701	SFR25H
A4A7R88*	698-0083		1	RESISTOR 1.96K 1% .125W TF TC=0+-100	19701	SFR25H
A4A7R89	757-0416		1	RESISTOR 511 +-1% .125W TF TC=0+-100	19701	SFR25H
A4A7R90*	7574395		1	RESISTOR 56.2 +-1% .125W TF TC=0+-100	19701	SFR25H
A4A7R91	698-3443		1	RESISTOR 287 1% .125W TF TC=0+-100	19701	SFR25H
A4A7R92*	698-3437		1	RESISTOR 133 1% .125W TF TC=0+-100	19701	SFR25H

**Indicates factory-selected value*

HP Part Number 85662-60004
A4A7 3 MHz Bandwidth Filter

Reference Designation	HP Part Number	CD	Qty	Description	Mfr Code	Mfr Part Number
A4A7R93	0698-0082	7	1	RESISTOR 464 1% .125W TF TC=0+-100	19701	SFR25H
A4A7R94*	0757-0416	7	1	RESISTOR 511 +-1% .125W TF TC=0+-100	19701	SFR25H
A4A7R95	0757-0416	7	1	RESISTOR 511 +-1% .125W TF TC=0+-100	19701	SFR25H
A4A7R96*	0698-0083	8	1	RESISTOR 1.96K 1% .125W TF TC=0+-100	19701	SFR25H
A4A7R97	0757-0416	7	1	RESISTOR 511 +-1% .125W TF TC=0+-100	19701	SFR25H
A4A7R98*	0757-0394	0	1	RESISTOR 51.1 +-1% .125W TF TC=0+-100	19701	SFR25H
A4A7R99	0698-3443	0	1	RESISTOR 287 1% .125W TF TC=0+-100	19701	SFR25H
A4A7R100*	0698-3437	2	1	RESISTOR 133 1% .125W TF TC=0+-100	19701	SFR25H
A4A7R101	0698-0082	7	1	RESISTOR 464 1% .125W TF TC=0+-100	19701	SFR25H
A4A7R102*	0757-0416	7	1	RESISTOR 511 +-1% .125W TF TC=0+-100	19701	SFR25H
A4A7R103	0757-0416	7	1	RESISTOR 511 +-1% .125W TF TC=0+-100	19701	SFR25H
A4A7R104*	0698-0083	8	1	RESISTOR 1.96K 1% .125W TF TC=0+-100	19701	SFR25H
A4A7R105	0757-0416	7	1	RESISTOR 511 +-1% .125W TF TC=0+-100	19701	SFR25H
A4A7R106	0757-0465	6	1	RESISTOR 100K +-1% .125W TF TC=0+-100	19701	SFR25H
A4A7R107	0757-0465	6	1	RESISTOR 100K +-1% .125W TF TC=0+-100	19701	SFR25H
A4A7R108	0757-0465	6	1	RESISTOR 100K +-1% .125W TF TC=0+-100	19701	SFR25H
A4A7R109	0757-0465	6	1	RESISTOR 100K +-1% .125W TF TC=0+-100	19701	SFR25H
A4A7TP1	0360-1788	7	1	CONNECTOR-SGL CONT PIN .045-IN-BSC-SZ SQ	04574	
A4A7TP2	0360-1788	7	1	CONNECTOR-SGL CONT PIN .045-IN-BSC-SZ SQ	04574	
A4A7TP3	0360-1788	7	1	CONNECTOR-SGL CONT PIN .045-IN-BSC-SZ SQ	04574	
A4A7TP4	0360-1788	7	1	CONNECTOR-SGL CONT PIN .045-IN-BSC-SZ SQ	04574	
A4A7TP5	0360-1788	7	1	CONNECTOR-SGL CONT PIN .045-IN-BSC-SZ SQ	04574	
A4A7TP6	0360-1788	7	1	CONNECTOR-SGL CONT PIN .045-IN-BSC-SZ SQ	04574	
A4A7TP7	0360-1788	7	1	CONNECTOR-SGL CONT PIN .045-IN-BSC-SZ SQ	04574	
A4A7TP8	0360-1788	7	1	CONNECTOR-SGL CONT PIN .045-IN-BSC-SZ SQ	04574	
A4A7TP9	0360-1788	7	1	CONNECTOR-SGL CONT PIN .045-IN-BSC-SZ SQ	04574	
A4A7TP10	0360-1788	7	1	CONNECTOR-SGL CONT PIN .045-IN-BSC-SZ SQ	04574	
A4A7Y1	0410-0404	9	1	CRYSTAL-QUARTZ, PART OF A MATCHED SET OF FIVE, INCLUDES A4A7Y1-A4A7Y5	00136	
A4A7Y2		9	1	CRYSTAL-QUARTZ, PART OF A MATCHED SET OF FIVE, INCLUDES A4A7Y1-A4A7Y5 (REFER TO A4A7Y1)		
A4A7Y3		9	1	CRYSTAL-QUARTZ PART OF A MATCHED SET OF FIVE, INCLUDES A4A7Y1-A4A7Y5 (REFER TO A4A7Y1)		
A4A7Y4		9	1	CRYSTAL-QUARTZ PART OF A MATCHED SET OF FIVE, INCLUDES A4A7Y1-A4A7Y5 (REFER TO A4A7Y1)		
A4A7Y5		9	1	CRYSTAL-QUARTZ PART OF A MATCHED SET OF FIVE, INCLUDES A4A7Y1-A4A7Y5 (REFER TO A4A7Y1)		

**Indicates factory-selected value*

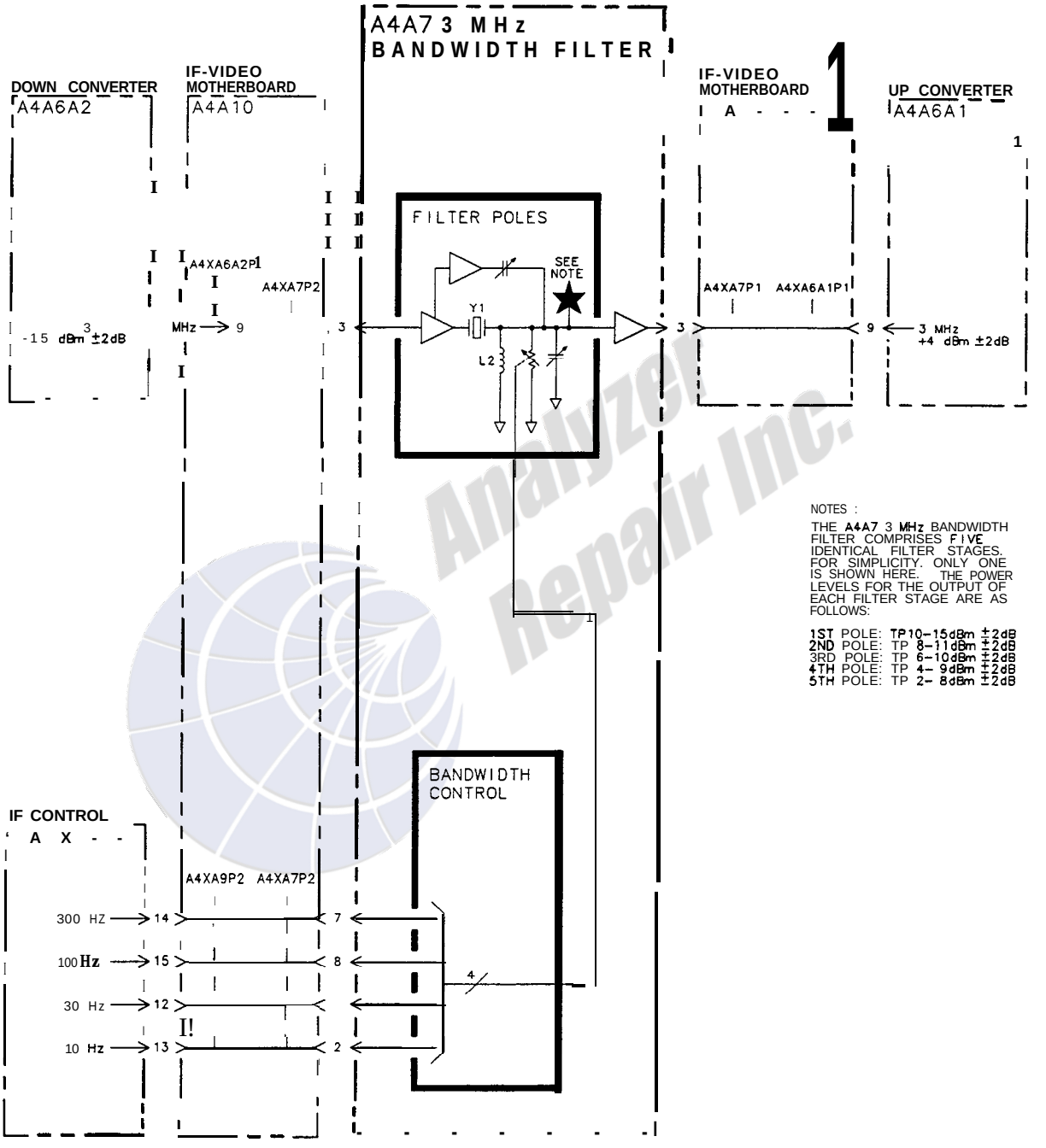

A4A7 3 MHz Bandwidth Filter, Block Diagram

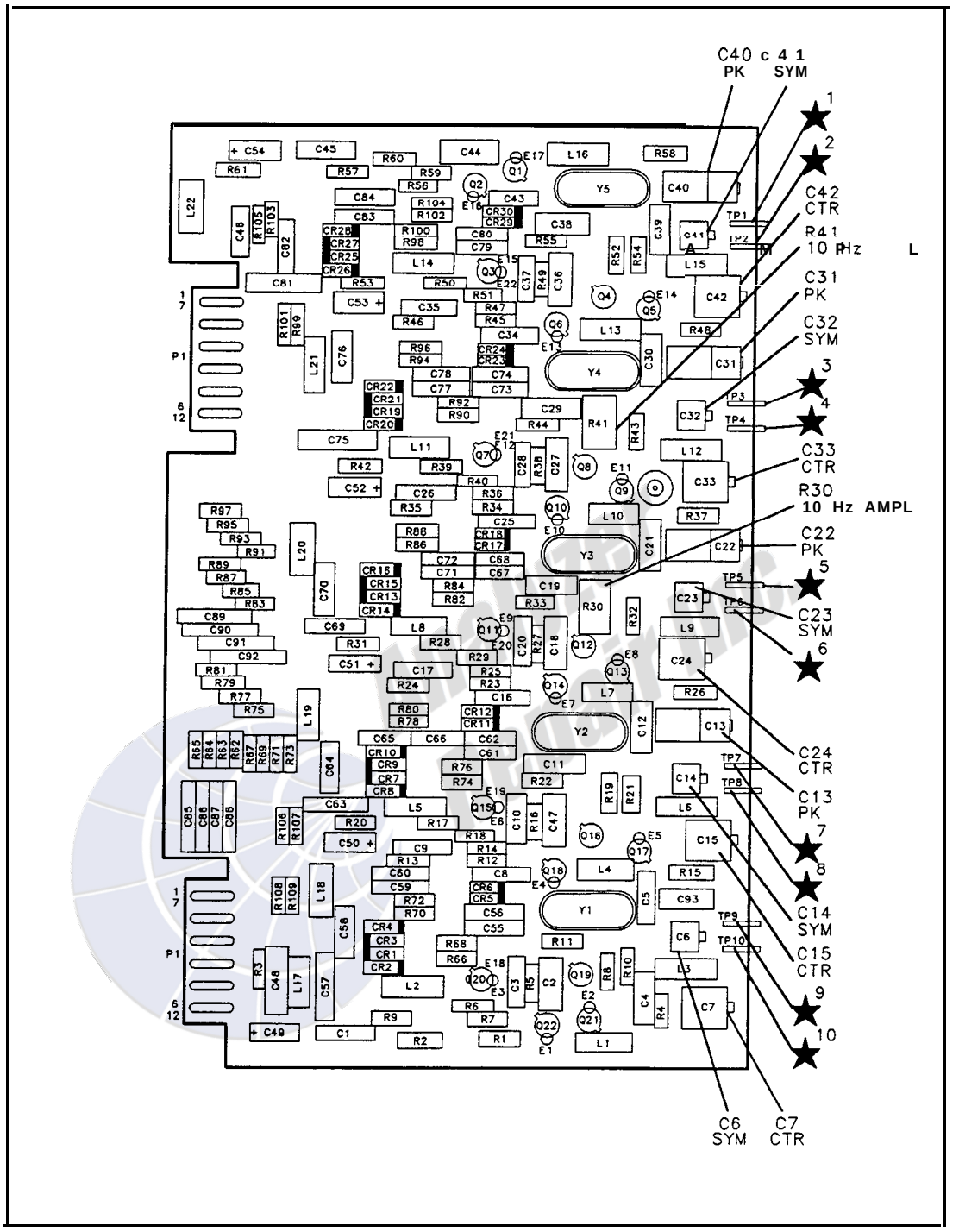

A4A7 3 MHz Bandwidth Filter Component Locations, 85662-60004 , 85662-60174

A4A7 3 MHz BANDWIDTH FILTER
85662-60004
(SERIAL PREFIX: 2403A)
85662-60174 (OPTION H96)
(SERIAL PREFIX: 2517A)

P1

PIN	SIGNAL	TO/FROM	FUNCTION BLOCK
1	GND		G
7	GND		G
2	GND		G
8	GND		G
3	3 MHz	A4A6A1P1-9	E
9	GND		G
4	GND		G
10	GND		G
5	GND		G
11	GND		G
6	GND		G
12	GND		G

P2

PIN	SIGNAL	TO/FROM	FUNCTION BLOCK
1	30 Hz	A4A9,P2-12	F
7	300 Hz	A4A9,P2-14	F
2	10 Hz	A4A9,P2-13	F
8	100 Hz	A4A9,P2-15	F
3	3 MHz	A4A6A2P1-9	A
9	GND		G
4	-15V		G
10	-15V		G
5	GND		G
11	GND		G
6	GND		G
12	GND		G

Ⓐ FIRST POLE

Ⓑ SECOND POLE

Ⓒ THIRD POLE

Ⓓ FOURTH POLE

Ⓔ FIFTH POLE

Ⓕ BANDWIDTH CONTROL (SEE NOTE 4)

Ⓖ POWER SUPPLIES

SEE NOTE 9 FOR THE RANGE OF FACTORY-SELECTED COMPONENTS

NOTES:

1. REFERENCE DESIGNATORS WITHIN THIS ASSEMBLY ARE ABBREVIATED. FOR COMPLETE REFERENCE DESIGNATION, PREFIX ABBREVIATION WITH ASSEMBLY DESIGNATION.
2. UNLESS OTHERWISE INDICATED: RESISTANCE IS IN OHMS (Ω) CAPACITANCE IS IN MICROFARADS(μF) INDUCTANCE IS IN MICROHENRIES(μH)
3. ASTERISK (*) DENOTES FACTORY SELECTED COMPONENTS; TYPICAL VALUE IS SHOWN. REFER TO NOTE 9 FOR RANGE OF VALUES.
4. TRUTH TABLE FOR BANDWIDTH CONTROL LINES.

RESOLUTION BANDWIDTH	CONTROL LINES 300 Hz	100 Hz	30 Hz	10 Hz
1 kHz	<-10V	<-10V	<-10V	<-10V
300 Hz	>+4V	<-10V	<-10V	<-10V
100 Hz	<-10V	>+4V	<-10V	<-10V
30 Hz	<-10V	<-10V	>+4V	<-10V
10 Hz	<-10V	<-10V	>+4V	>+4V

5. INSTRUMENT SETTINGS FOR ALL MEASUREMENTS ON THIS BOARD:

INSTRUMENT PRESET	
CENTER FREQUENCY	CAL. OUT FREQ.
FREQUENCY SPAN	0 Hz
ATTENUATION	0 dB
RESOLUTION BANDWIDTH	1 kHz

6. ALL MEASUREMENTS ARE WITH BOARDS ON EXTENDERS. POWER LEVELS MAY VARY ± 2 dB. RF VOLTAGES MAY VARY ± 25%.
7. SOURCE VOLTAGE SHOULD BE 0.2 TO 2.0V SQUARE WAVE INTO 50Ω LOAD FOR Q2, Q9, Q10, Q15 AND Q18. GATE TO BOARD ONLY. THE SOURCE IS INDICATED WITH A SQUARE PAD.
8. UNLESS OTHERWISE INDICATED: SIGNALS ENTER AT LEFT SIDE AND EXIT AT RIGHT SIDE OF FUNCTION BLOCKS.
9. THE COMPONENTS LISTED BELOW ARE FACTORY-SELECTED COMPONENTS. THE RANGE OF ACCEPTABLE VALUES FOR EACH FACTORY-SELECTED COMPONENT IS ALSO LISTED.

COMPONENT	ACCEPTABLE VALUES
C5*, C12*, C21*, C30*	56pF – 82pF
C39*	1.5pF – 12pF
R12*, R13*, R22*, R24*, R34*, R35*, R40*, R45*	10KΩ – 17.8KΩ
R56*, R57*	7.5KΩ – 13.3KΩ
R64*, R66*, R74*, R84*	38.3Ω – 68.1Ω
R88*, R76*, R84*, R92*, R100*	100Ω – 178Ω
R70*, R78*, R86*, R94*, R102*	383Ω – 681Ω
R72*, R80*, R88*, R96*, R104*	1470Ω – 2610Ω
R90*, R98*	3.83Ω – 68.1Ω

A4A7

A4A7 3 MHz BANDWIDTH FILTER, SCHEMATIC DIAGRAM

A4A8

A4A8 Attenuator-Bandwidth Filter, Circuit Description

A4A8 Attenuator-Bandwidth Filter and A4A4 Bandwidth Filter operate at 21.4 MHz and are variable in bandwidth from 3 kHz to 3 MHz. The narrower bandwidths (3 kHz through 30 kHz) are obtained from five synchronously tuned crystal filters; the wider bandwidths (100 kHz through 3 MHz), from four synchronously tuned LC tank circuits (the bandwidths 10 Hz through 1 kHz are obtained from A4A7 3 MHz Filter). The Bandwidth Filter assemblies are on similar printed- circuit boards. A4A8 has two LC filters and two crystal filters, and A4A4 has two LC filters and three crystal filters (A4861 Up Converter has a single 21.4 MHz crystal that is used only for bandwidths $\leq$1 kHz). These six crystals comprise a matched set and must be replaced as such. The replacement assemblies are shipped without crystals, so the crystals from the replaced boards must be used again.

10–20 dB Attenuator, 10 dB Amplifier Ⓐ

The 10 dB Amplifier is a common emitter amplifier with a gain of approx; 10 dB.

$$G = \frac{R63}{R3||R62} \qquad G_{dB} = 20 \log G$$

$$= \frac{\text{---}}{90.91} \qquad = 20 \log 3.16$$

$$= 3.16 \qquad \approx 10$$

For the lower gain settings of 0 dB and -10 dB (activated by A10dB and A20dB, respectively), additional collector resistance is switched in by CR3 or CR2, thereby lowering the gain.

Input Buffer Amplifier Ⓒ

The unity gain Input Buffer Amplifier functions as a noninverting op amp. (See Figure 1.)

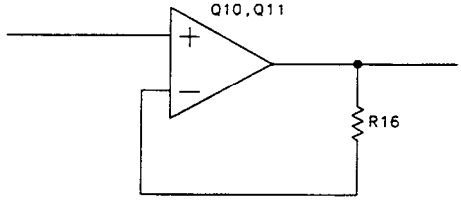

Figure 1. A4A8 Input Buffer Amplifier, Equivalent Circuit

In the crystal mode (3 kHz, 10 kHz, and 30 kHz bandwidths), the amplifier includes Q2. The biasing of the amplifier is independent of its ac (21.4 MHz) operation but is very critical for its proper functioning. If a malfunction occurs, the dc bias should be checked first.

Analyzer Repair Inc.

The current through Q10 is determined by the difference between two current sources, one involving Q2 and the other involving Q11. (See Figure 2.) The most convenient way to find the current from each source is to measure the voltage across each emitter resistor (a 1 k Ohm resistor should be used in series with the voltmeter probe tip to prevent the circuit from oscillating and giving an erroneous reading). For Q2, the current through R60 must be included. If results are inconsistent, the emitter resistor should be checked also. Check to see that the BW5 line is at approximately -0.5 V for bandwidths ≤30 kHz.

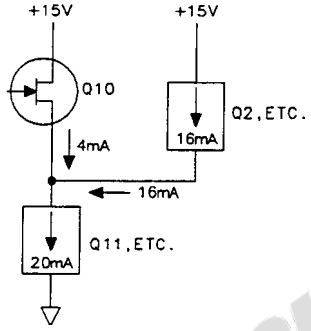

Figure 2. A4A8 Input Buffer Amplifier, Current Sinks

In the LC mode (the four wider bandwidths), the BW5 line goes to approximately $14.8 V and turns off the current source Q2. The current supplied by Q2 in the crystal mode is now supplied through CR5 and R15 from the BW5 line. In the LC mode, the current through Q10 can be found by subtracting the current through R5 from the current through R12. C76, L34, and C77 form a feedback tank circuit to suppress oscillations.

Buffer Amplifier Ⓕ

The Buffer Amplifier is similar to the input Buffer Amplifier. The input is selected by the BW5 line from CR9 in the LC mode or from CR8 in the crystal mode.

In the crystal mode, the current through Q4 is determined by the difference between the current sourced by Q6 and that sunk by Q5 (about 4 mA). A significant deviation from this current should be reflected by the gate-to-source voltage of Q4. The source should be at least 0.4 V more positive than the gate, but not more than 2.0 V more positive. If the difference is less than 0.4 V, the FET current is too high; if the difference is greater than 2.0 V, the FET current may be too low. In the either case the FET could also be defective. To determine precisely the current through Q4, the difference between the current through R47 and that through R61 should be subtracted from the current through R41. If the results are inconsistent, check the above-mentioned resistors.

In the LC mode of operation, current is supplied through R44 and CR11 from the BW5 line instead of through Q6. The difference between the current through R44 and that through R41 yields the FET current. C79, L35, and C80 form a feedback tank circuit to suppress oscillations.

Analyzer Repair Inc.

Output Buffer Amplifier ①

The Output Buffer Amplifier is a complementary pair of transistors in which Q8 acts as a source follower boosted by Q9. The current through FET Q8 is set by R58:

$$I_{FET} = \frac{V_{be(Q9)}}{196\Omega} \approx \frac{0.7V}{196\Omega} \approx 3.5mA$$

The total current through Q8 and Q9 is set by R59. The input is selected by the BW5 line from either CR15 in the LC mode or CR14 in the crystal mode.

Crystal Filtering Circuits Ⓔ Ⓗ

The bandwidths 3 kHz, 10 Hz, and 30 kHz are obtained by crystal filtering in the First Crystal Pole and Second Crystal Pole circuits. The crystals are used in series resonant mode and can be modeled as a series resonant circuit with a parallel capacitance. (See Figure 3.)

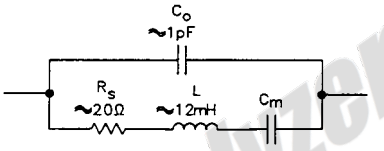

Figure 3. Quartz Crystal, Simplified Schematic

The parallel capacitance (C,) and series resistance (R_s) are not desired and are compensated for in the circuit, as shown in the equivalent circuit of a single pole of crystal filtering. (See Figure 4.)

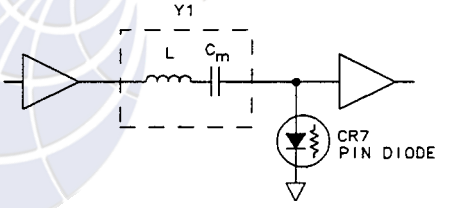

Figure 4. Crystal Filtering Pole, Equivalent Circuit

Since the two crystal filtering circuits are almost identical, the following description is for the First Crystal Pole circuit only.

The PIN diode CR7 functions as a variable resistor at 21.4 MHz. As the resistance is lowered by increasing the current in the BW63 line, the bandshape becomes narrower. The bandwidth of one pole widens to approximately 80 kHz when CR7 is turned off completely at the 30 kHz BW setting. For a five-pole filter, the bandwidth of each pole is about 2.6 times the bandwidth of all five poles taken together.

A simplified schematic of a crystal pole, including compensation for R_s and C_o in the crystal and input capacitance of the buffer amplifier, is shown in Figure 5.

Analyzer Repair Inc.

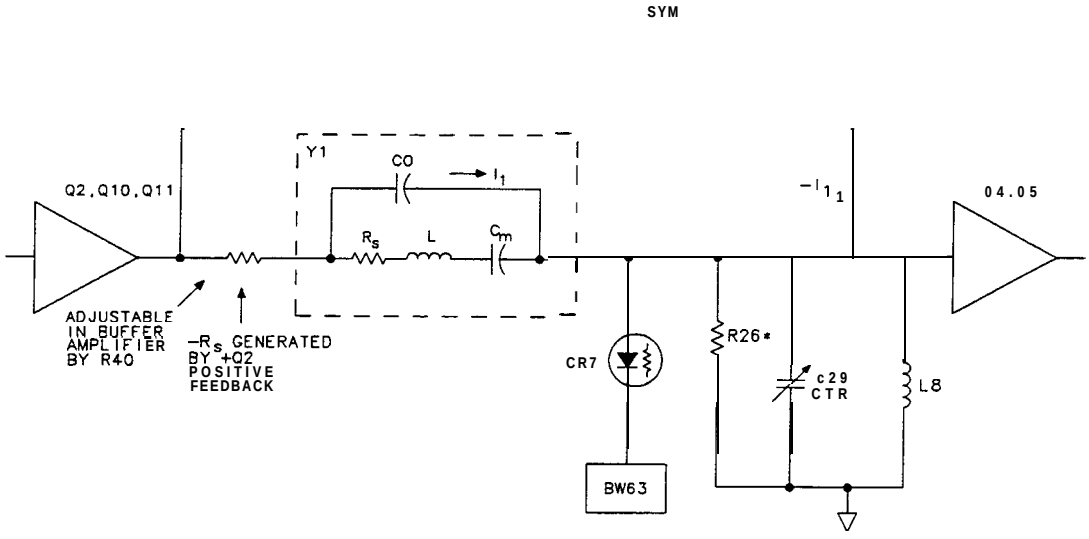

Figure 5. Crystal Pole, Simplified Schematic

The SYM adjustment Cl3 compensates for C_o by producing a current $(-I_1)$ that is equal to the current (I_1) through C_o of the crystal but opposite in phase. These currents cancel, nullifying the effect of C-o-. The positive feedback from the collector of Q2 generates a negative output resistance that cancels R_s of the crystal. This is approximated by resistor R16 in the Input Buffer Amplifier and XTL adjustment R40 in the Buffer Amplifier.

The input capacitance of the Buffer Amplifier, printed circuit board capacitance, PIN diode capacitance, and the centering (CTR) capacitor C29 are in parallel resonance with L8. These components have negligible effect on the band shape. As long as C29 has sufficient range to "dip" the band shape, they can be ignored in analyzing the remainder of the circuit.

The PIN diode CR7 controls bandwidths from 3 kHz to 10 kHz. For the 30 kHz bandwidth, CR7 is back biased and R26 sets that bandwidth. If the 30 kHz bandwidth is much too narrow, even with CR7 back biased, the circuit might be loaded by a bad buffer amplifier (Q4, Q5). If the bandwidth is only slightly narrow, it may be widened by selecting a new value for R26*. If the narrowest bandwidth (3 kHz) has too little gain, and it cannot be increased enough by XTL adjustment R40, then the crystals may have too high a series resistance (defective crystal), the output resistance may not be negative enough (defective Buffer Amplifier or Q3), or the crystals may have drifted too far apart in frequency.

LC Filters Ⓓ Ⓖ

The two LC filtering circuits are used for the wider bandwidths (100 kHz through 3 MHz). They are similar in function; the Second LC Pole circuit is described. A schematic of the simplified equivalent circuit is shown in Figure 6.

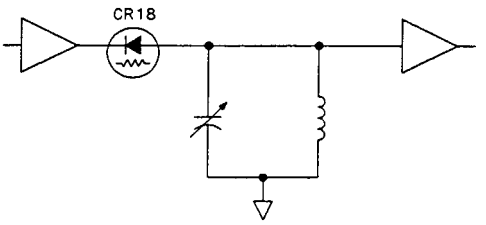

Figure 6. LC Pole, Equivalent Circuit

The Q (bandwidth) is set by the resistance of the PIN diode CR18. A more detailed schematic of the Second LC Pole circuit is shown in Figure 7.

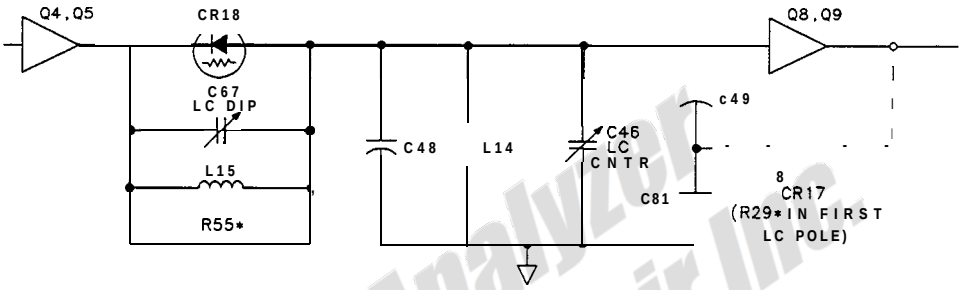

Figure 7. Second LC Pole Circuit, Simplified Schematic

The LC filter pole comprises an inductor (L14) in parallel with four capacitors: C48, C46 (LC CENTER), and the series combination of C49* and C81*. The parallel circuit is driven through PIN diode CR18, which functions as a variable resistor. The BW7 line sets the current through CR18. Higher resistance results in narrower bandwidth.

C67 and L15 tune out the case capacitance of CR18. R55* sets the 100 kHz bandwidth when CR18 is back biased (that is, highest resistance). CR17 is controlled by the LC adjustment R35 and compensates for losses in the parallel resonant circuit. In the First LC Pole circuit, fixed resistor R29* replaces CR17.

Low gain in one of the poles in the 100 kHz bandwidth is caused by:

1. Broken or cracked metalized-glass inductor (often intermittent).
2. The pole being centered at some frequency other than 21.4 MHz.
3. Insufficient feedback from the buffer amplifier.
4. Defective buffer amplifier that is loading the circuit.

If the 10 kHz bandwidth amplitude is correct, but that of the 300 kHz bandwidth is too low, either C66 or C67 is not properly adjusted. If the 300 kHz amplitude is too high, the four LC poles are not tuned close enough to the same frequency. In either case, refer to the Performance Tests and Adjustments Manual.

Analyzer Repair Inc.

A4A8 Attenuator-Bandwidth Filter, Troubleshooting

As an aid in troubleshooting, critical dc voltages for proper operation are indicated at several nodes on the accompanying schematic.

If the resolution bandwidths from 3 kHz to 3 MHz have low gain or incorrect bandwidth, either this board or the A4A4 Bandwidth Filter board may be defective. To determine which board is faulty, disconnect the 97 cable from A4A8J1 and connect it to A4A6J1. If the signal is then 3 to 5 dB lower than expected (CAL OUTPUT is -13 to -15 dBm) or the bandwidth is 30 to 60 percent wider than expected (1MHz [RES BW] is 1.3 to 1.5 MHz), then A4A8 is suspect.

Control line BW5 determines whether the LC filters or the crystal filters are selected. If this line does not switch, A4A9Q3 on the IF control board should be checked. BW63 controls the crystal mode resolution bandwidths from 3 kHz to 30 kHz. The LC resolution bandwidths from 100 kHz to 3 MHz are controlled by BW7. If any of the control line voltages in Note 5 of the schematic diagram are incorrect, signals from A4A9 IF Control should be checked.

Operation of the A10dB and A20dB circuitry can be determined by the following method. Connect a 355D attenuator between the CAL OUTPUT and the input of the spectrum analyzer. Set this attenuator to 90 db, press Instrument Preset, and key in the following:

[CENTER FREQUENCY] ..... equal to the CAL OUTPUT frequency
[FREQUENCY SPAN] ..... .O Hz
[RES BW] ..... 1 kHz
[ATTEN] ..... 0 dB
[VIDEO BW] ..... 10 Hz
[SWEEP TIME] ..... 20 s
[REFERENCE LEVEL] ..... -10 dBm

Press the [SINGLE] sweep key and then repeatedly press the DATA STEP [▼] key. Figure 8 shows the display of a properly working instrument. If either of the first two steps is missing, the A10dB or A20dB circuitry is faulty. Note 6 on the schematic diagram indicates the correct control line voltages from the A4A9 IF Control board.

Analyzer Repair Inc.

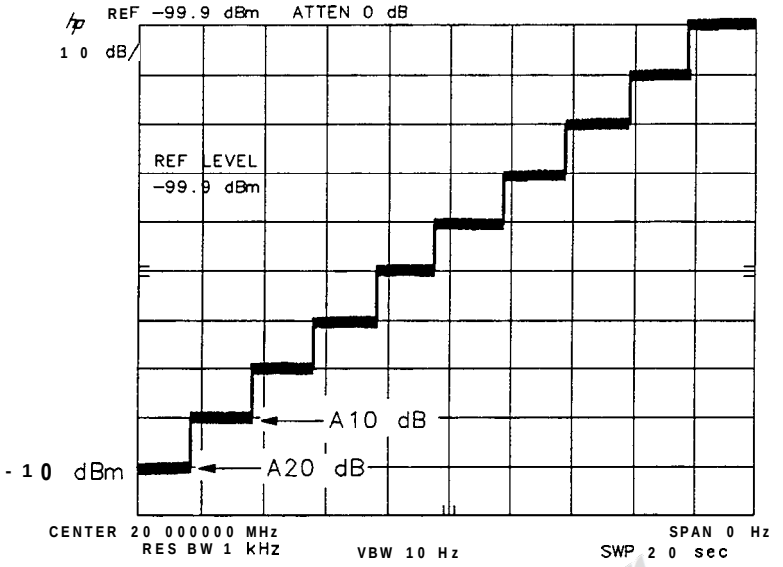

NOTE: Center Frequency readout will be 100.000 000 MHz for on HP8566B

Figure 8. A10dB/A20dB Step Display

Analyzer Repair Inc.

HP Part Number 85662-60131

A4A8 Attenuator-Bandwidth Filter

Reference Designatior	HP Part Number	C D	Qty	Description	Mfr Code	Mfr Part Number
A4A8	85662-60131	8	1	BOARD ASSEMBLY, ATTENUATOR-BANDWIDTH FILTER (SERIAL PREFIXES: 2403A-2648A)	28480	85662-60131
A4A8C1	0140-0200	0	1	CAPACITOR-FXD 390PF +-5% 300VDC MICA 0+7	09023	CD15FD391J03
A4A8C2	0160-2055	9	1	CAPACITOR-FXD .01UF +80-20% 100VDC CER		805-504 Y5V 103Z
A4A8C3	0160-2055	9	1	CAPACITOR-FXD .01UF +80-20% 100VDC CER		805-504 Y5V 1032
A4A8C4	0160-2055	9	1	CAPACITOR-FXD .01UF +80-20% 100VDC CER		805-504 Y5V 103Z
A4A8C5	0160-2055	9	1	CAPACITOR-FXD .01UF +80-20% 100VDC CER		805-504 Y5V 103Z
A4A8C6	0160-2055	9	1	CAPACITOR-FXD .01UF +80-20% 100VDC CER		805-504 Y5V 103Z
A4A8C7	0160-2055	9	1	CAPACITOR-FXD .01UF +80-20% 100VDC CER		805-504 Y5V 103Z
A4A8C8	0160-2055	9	1	CAPACITOR-FXD .01UF +80-20% 100VDC CER		805-504 Y5V 103Z
A4A8C9	0160-2055	9	1	CAPACITOR-FXD .01UF +80-20% 100VDC CER		805-504 Y5V 1032
A4A8C11	0160-2055	9	1	CAPACITOR-FXD .01UF +80-20% 100VDC CER		805-504 Y5V 1032
A4A8C12	0160-2255	1	1	CAPACITOR-FXD 8.2pF 500 V	52763	
A4A8C13	0121-0059	7	1	CAPACITOR-V TRMR-CER 2-8PF 350V PC-MTG	52763	304-324-139
A4A8C14*	0160-2249	3	1	CAPACITOR-FXD 4.7PF +-.25PF 500VDC CER	52763	2RDPLX0504R7NP0
A4A8C15	0160-2055	9	1	CAPACITOR-FXD .01UF +80-20% 100VDC CER		805-504 Y5V 103Z
A4A8C16	0160-2055	9	1	CAPACITOR-FXD .01UF +80-20% 100VDC CER		805-504 Y5V 103Z
A4A8C17	0160-2207	3	1	CAPACITOR-FXD 300pF 300 V MICA	09023	CD15FD301J03
A4A8C18	0160-2055	9	1	CAPACITOR-FXD .01UF +80-20% 100VDC CER		805-504 Y5V 103Z
A4A8C19	0160-4297	5	1	CAPACITOR-FXD .022UF +80-20% 100VDC CER		562CZC101AH223ZA23
A4A8C20	0160-2055	9	1	CAPACITOR-FXD .01UF +80-20% 100VDC CER		805-504 Y5V 1032
A4A8C21	0160-3456	6	1	CAPACITOR-FXD 1000PF +-10% 1KVDC CER		808-542 X5E 102K
A4A8C22	0160-2055	9	1	CAPACITOR-FXD .01UF +80-20% 100VDC CER		805-504 Y5V 103Z
A4A8C23	0160-2055	9	1	CAPACITOR-FXD .01UF +80-20% IOOVDC CER		805-504 Y5V 103Z
A4A8C24	0160-2055	9	1	CAPACITOR-FXD .01UF +80-20% 100VDC CER		805-504 Y5V 103Z
A4A8C25	0160-2055	9	1	CAPACITOR-FXD .01UF +80-20% 100VDC CER		805-504 Y5V 103Z
A4A8C26	1160-4297	5	1	CAPACITOR-FXD .022UF +80-20% 100VDC CER		562CZC101AH223ZA23
A4A8C27	1160-2055	3	1	CAPACITOR-FXD .01UF +80-20% 100VDC CER		805-504 Y5V 103Z
A4A8C28	1160-2055	3	1	CAPACITOR-FXD .01UF +80-20% 100VDC CER		805-504 Y5V 103Z
A4A8C29	1121-0446	5	1	CAPACITOR-VAR 4.5pF 2pF 160 V	52763	302-450-502
A4A8C30	1160-2055	3	1	CAPACITOR-FXD .01UF +80-20% IOOVDC CER		805-504 Y5V 103Z
A4A8C31	1160-2055	3	1	CAPACITOR-FXD .01UF +80-20% 100VDC CER		805-504 Y5V 103Z
A4A8C32	)121-0036	3	1	CAPACITOR-V TRMR-CER 5.5-18PF 350V PC-MT	52763	304-324-237
A4A8C33	)160-2055	3	1	CAPACITOR-FXD .01UF +80-20% 100VDC CER		805-504 Y5V 103Z
A4A8C34	)160-0437	7	1	CAPACITOR-FXD 12pF 500 V		301-000-P3K0-120J
A4A8C35*	1160-0134	1	1	CAPACITOR-FXD 220PF +-5% 300VDC MICA 0+7	09023	CD15FD221J03
A4A8C36	1160-2055	9	1	CAPACITOR-FXD .01UF +80-20% 100VDC CER		805-504 Y5V 1032
A4A8C38	)160-2055	9	1	CAPACITOR-FXD .01UF +80-20% 100VDC CER		805-504 Y5V 1032
A4A8C39	1160-4297	5	1	CAPACITOR-FXD .022UF +80-20% 100VDC CER		562CZC101AH223ZA23
A4A8C40	)160-2055	9	1	CAPACITOR-FXD .01UF +80-20% IOOVDC CER		805-504 Y5V 103Z
A4A8C41	1160-2254	0	1	CAPACITOR-FXD 7.5pF 500 V	52763	
A4A8C42	1121-0059	7	1	CAPACITOR-V TRMR-CER 2-8PF 350V PC-MTG	52763	304-324-139
A4A8C43*	1160-2249	3	1	CAPACITOR-FXD 4.7PF +-.25PF 500VDC CER	52763	2RDPLX0504R7NP0
A4A8C44	)121-0446	5	1	CAPACITOR-VAR 4.5pF 2pF 160 V	52763	302-450-502
A4A8C45	1160-2055	9	1	CAPACITOR-FXD .01UF +80-20% 100VDC CER		805-504 Y5V 103Z
A4A8C46	1121-0036	0	1	CAPACITOR-V TRMR-CER 5.5-18PF 350V PC-MT	52763	304-324-237
A4A8C47	)160-2055	9	1	CAPACITOR-FXD .01UF +80-20% 100VDC CER		805-504 Y5V 1032

**Indicates factory-selected value*

HP Part Number 85662-60131

A4A8 Attenuator-Bandwidth Filter

Reference Designation	HP Part Number	CD	Qty	Description	Mfr Code	Mfr Part Number
A4A8C48	0160-0437	7	1	CAPACITOR-FXD 12pF 500 V		301-000-P3K0-120J
A4A8C49*	0160-0134	1	1	CAPACITOR-FXD 220PF +-5% 300VDC MICA 0+7	09023	CD15FD221J03
A4A8C50	0160-3456	6	1	CAPACITOR-FXD 1000PF +-10% 1KVDC CER		808-542 X5E 102K
A4A8C51	0160-2055	9	1	CAPACITOR-FXD .01UF +80-20% 100VDC CER		805-504 Y5V 1032
A4A8C52	0160-2055	9	1	CAPACITOR-FXD .01UF +80-20% 100VDC CER		805-504 Y5V 1032
A4A8C53	0160-2055	9	1	CAPACITOR-FXD .01UF +80-20% 100VDC CER		805-504 Y5V 1032
A4A8C54	0160-2055	9	1	CAPACITOR-FXD .01UF +80-20% 100VDC CER		805-504 Y5V 103Z
A4A8C55	0160-2055	9	1	CAPACITOR-FXD .01UF +80-20% 100VDC CER		805-504 Y5V 1032
A4A8C56	0160-2055	9	1	CAPACITOR-FXD .01UF +80-20% 100VDC CER		805-504 Y5V 1032
A4A8C57	0160-2055	9	1	CAPACITOR-FXD .01UF +80-20% 100VDC CER		805-504 Y5V 1032
A4A8C58	0160-2055	9	1	CAPACITOR-FXD .01UF +80-20% 100VDC CER		805-504 Y5V 1032
A4A8C59	0160-2055	9	1	CAPACITOR-FXD .01UF +80-20% 100VDC CER		805-504 Y5V 103Z
A4A8C60	0160-4297	5	1	CAPACITOR-FXD .022UF +80-20% 100VDC CER		562CZC101AH223ZA23
A4A8C61	0160-2055	9	1	CAPACITOR-FXD .01UF +80-20% 100VDC CER		805-504 Y5V 1032
A4A8C62	0160-2055	9	1	CAPACITOR-FXD .01UF +80-20% 100VDC CER		805-504 Y5V 1032
A4A8C63*	0140-0194	1	1	CAPACITOR-FXO 110PF +-5% 300VDC MICA	09023	CD15FD111J03
A4A8C64	0160-2055	9	1	CAPACITOR-FXD .01UF +80-20% 100VDC CER		805-504 Y5V 1032
A4A8C65	0160-2055	9	1	CAPACITOR-FXD .01UF +80-20% 100VDC CER		805-504 Y5V 103Z
A4A8C66	0121-0452	4	1	CAPACITOR-V TRMR-AIR 1.3-5.4PF 175V PC-M	74970	187-0103-028
A4A8C67	0121-0452	4	1	CAPACITOR-V TRMR-AIR 1.3-5.4PF 175V PC-M	74970	187-0103-028
A4A8C68	0160-2055	9	1	CAPACITOR-FXD .01UF +80-20% 100VDC CER		805-504 Y5V 1032
A4A8C69	0160-2055	9	1	CAPACITOR-FXD .01UF +80-20% 100VDC CER		805-504 Y5V 1032
A4A8C70	0160-2207	3	1	CAPACITOR-FXD 300pF 300 V MICA	09023	CD15FD301J03
A4A8C71	0160-2055	9	1	CAPACITOR-FXD .01UF +80-20% 100VDC CER		805-504 Y5V 103Z
A4A8C72	0160-4084	8	1	CAPACITOR-FXD 0.1uF 50 V	56289	1C20X7R104M050B
A4A8C73	0160-4084	8	1	CAPACITOR-FXD 0.1uF 50 V	56289	1C20X7R104M050B
A4A8C74	0160-2055	9	1	CAPACITOR-FXD .01UF +80-20% 100VDC CER		805-504 Y5V 103Z
A4A8C75	0160-2055	9	1	CAPACITOR-FXD .01UF +80-20% 100VDC CER		805-504 Y5V 103Z
A4A8C76	0160-2055	9	1	CAPACITOR-FXD .01UF +80-20% 100VDC CER		805-504 Y5V 1032
A4A8C77	0160-2258	4	1	CAPACITOR-FXD 11pF 500 V	52763	
A4A8C78*	0140-0198	5	1	CAPACITOR-FXD 200PF +-5% 300VDC MICA	09023	CD15FD201J03
A4A8C79	0160-2055	9	1	CAPACITOR-FXD .01UF +80-20% 100VDC CER		805-504 Y5V 1032
A4A8C80	0160-2258	4	1	CAPACITOR-FXD 11pF 500 V	52763	
A4A8C81*	0140-0198	5	1	CAPACITOR-FXD 200PF +-5% 300VDC MICA	09023	CD15FD201J03
A4A8CR2	1901-1070	9	1	DIODE-PIN 110V	28480	
A4A8CR3	1901-1070	9	1	DIODE-PIN 110V	28480	
A4A8CR4	1901-0047	8	1	DIODE-SWITCHING 20V 75MA 10NS DO-35	71468	
A4A8CR5	1901-0047	8	1	DIODE-SWITCHING 20V 75MA 10NS DO-35	71468	
A4A8CR6	1901-1070	9	1	DIODE-PIN 110V	28480	
A4A8CR7	1901-1070	9	1	DIODE-PIN 110V	28480	
A4A8CR8	1901-0535	9	1	DIODE-SCHOTTKY SM SIG		
A4A8CR9	1901-0047	8	1	DIODE-SWITCHING 20V 75MA 10NS DO-35	71468	
A4A8CR10	1901-0535	9	1	DIODE-SCHOTTKY SM SIG		
A4A8CR11	1901-0047	8	1	DIODE-SWITCHING 20V 75MA 10NS DO-35	71468	
A4A8CR12	1901-0047	8	1	DIODE-SWITCHING 20V 75MA 10NS DO-35	71468	
A4A8CR13	1901-1070	9	1	DIODE-PIN 110V	28480	
A4A8CR14	1901-0535	9	1	DIODE-SCHOTTKY SM SIG		
A4A8CR15	1901-0047	8	1	DIODE-SWITCHING 20V 75MA 10NS DO-35	71468	

**Indicates factory-selected value*

HP Part Number 85662-60131

A4A8 Attenuator-Bandwidth Filter

Reference Designation	HP Part Number	C D	Qty	Description	Mfr Code	Mfr Part Number
A4A8CR16	1901-0535	9	1	DIODE-SCHOTTKY SM SIG		
A4A8CR17	1901-1070	9	1	DIODE-PIN 110V	28480	
A4A8CR18	1901-1070	9	1	DIODE-PIN 110V	28480	
A4A8CR19	1901-0535	9	1	DIODE-SCHOTTKY SM SIG		
A4A8E1	9170-0029	3	1	CORE-SHIELDING BEAD	02114	56-590-65A2/4A
A4A8E3	9170-0029	3	1	CORE-SHIELDING BEAD	02114	56-590-65A2/4A
A4A8E4	9170-0029	3	1	CORE-SHIELDING BEAD	02114	56-590-65A2/4A
A4A8E5	9170-0029	3	1	CORE-SHIELDING BEAD	02114	56-590-65A2/4A
A4A8E6	9170-0029	3	1	CORE-SHIELDING BEAD	02114	56-590-65A2/4A
A4A8E8	9170-0029	3	1	CORE-SHIELDING BEAD	02114	56-590-65A2/4A
A4A8E9	9170-0029	3	1	CORE-SHIELDING BEAD	02114	56-590-65A2/4A
A4A8E10	9170-0029	3	1	CORE-SHIELDING BEAD	02114	56-590-65A2/4A
A4A8E11	9170-0029	3	1	CORE-SHIELDING BEAD	02114	56-590-65A2/4A
A4A8E12	9170-0029	3	1	CORE-SHIELDING BEAD	02114	56-590-65A2/4A
A4A8E13	9170-0029	3	1	CORE-SHIELDING BEAD	02114	56-590-65A2/4A
A4A8E14	9170-0029	3	1	CORE-SHIELDING BEAD	02114	56-590-65A2/4A
A4A8J1	1250-2112	1	1	CONNECTOR-RF SMB M SGL-HOLE-FR 50-OHM	98291	051-047-0259-220
A4A8L1	9100-3314	8	1	INDUCTOR RF-CH-MLD 150NH +-5% .166D-INX.	24226	15M150J
A4A8L2	9140-0179	1	1	INDUCTOR RF-CH-MLD 22UH +-10% .166D-INX.	99800	1537-44
A4A8L3	9140-0453	4	1	INDUCTOR RF-CH-MLD 6.8UH +-5% .166D-INX.	24226	15M-681J
A4A8L4	9100-1618	1	1	INDUCTOR RF-CH-MLD 5.6UH +-10% .166D-INX	99800	1537-30
A4A8L5	9140-0114	4	1	INDUCTOR RF-CH-MLD 10UH +-10% .166D-INX.	99800	1537-36
A4A8L6	9140-0114	4	1	INDUCTOR RF-CH-MLD 10UH +-10% .166D-INX.	99800	1537-36
A4A8L7	9100-2813	0	1	INDUCTOR 385NH +-5% .312D-INX1.016LG-IN	52763	5087-0273-I
A4A8L8	9140-0111	1	1	INDUCTOR RF-CH-MLD 3.3UH +-10% .166D-INX	99800	1537-24
A4A8L9	9100-1620	5	1	INDUCTOR RF-CH-MLD 15UH +-10% .166D-INX.	99800	1537-40
A4A8L10	9140-0453	4	1	INDUCTOR RF-CH-MLD 6.8UH +-5% .166D-INX.	24226	15M-681J
A4A8L11	9100-1618	1	1	INDUCTOR RF-CH-MLD 5.6UH +-10% .166D-INX	99800	1537-30
A4A8L12	9100-1618	1	1	INDUCTOR RF-CH-MLD 5.6UH +-10% .166D-INX	99800	1537-30
A4A8L13	9140-0114	4	1	INDUCTOR RF-CH-MLD 10UH +-10% .166D-INX.	99800	1537-36
A4A8L14	9100-2813	0	1	INDUCTOR 385NH +-5% .312D-INX1.016LG-IN	52763	5087-0273-I
A4A8L15	9100-1620	5	1	INDUCTOR RF-CH-MLD 15UH +-10% .166D-INX.	99800	1537-40
A4A8L16	9100-1620	5	1	INDUCTOR RF-CH-MLD 15UH +-10% .166D-INX.	99800	1537-40
A4A8L17	9140-0111	1	1	INDUCTOR RF-CH-MLD 3.3UH +-10% .166D-INX	99800	1537-24
A4A8L19	9100-1618	1	1	INDUCTOR RF-CH-MLD 5.6UH +-10% .166D-INX	99800	1537-30
A4A8L20	9140-0179	1	1	INDUCTOR RF-CH-MLD 22UH +-10% .166D-INX.	99800	1537-44
A4A8L33	9140-0158	6	1	INDUCTOR RF-CH-MLD 1UH +-10% .105D-INX.2	32159	1A1002M +-10%
A4A8L34	9140-0112	2	1	INDUCTOR RF-CH-MLD 4.7UH +-10% .166D-INX	99800	1537-28
A4A8L35	9140-0112	2	1	INDUCTOR RF-CH-MLD 4.7UH +-10% .166D-INX	99800	1537-28
A4A8MP1	85662-20038	0	1	COVER, ATTENUATOR-BANDWIDTH FILTER	28480	85662-20038
A4A8MP2	86701-40001	9	1	EXTRACTOR-PC	28480	86701-40001
A4A8MP5	2190-0557	7	1	WASHER-LK INTL T NO. 10 .195-IN-ID	78189	1210-06-00-0551
A4A8MP6	2950-0078	9	1	NUT-HEX-DBL-CHAM 10-32-THD .067-IN-THK	74163	500220
A4A8MP7	2200-0101	0	4	SCREW-MACH 4-40 .188-IN-LG PAN-HO-POZI	77250	
A4A8MP8	6960-0069	3	1	PLUG-HOLE CNCL-HD FOR .125-D-HOLE NYL	02768	207-080501-00-0101
A4A8Q1	1854-0345	8	1	TRANSISTOR NPN 2N5179 SI TO-72 PD=200MW	04713	2N5179
A4A8Q2	1853-0007	7	1	TRANSISTOR PNP 2N3251 SI TO-18 PD=360MW	04713	2N3251

**Indicates factory-selected value*

HP Part Number 85662-60131

A4A8 Attenuator-Bandwidth Filter

Reference Designation	HP Part Number	C D	Qty	Description	Mfr Code	Mfr Part Number
A4A8Q3	1853-0007		1	TRANSISTOR PNP 2N3251 SI TO-18 PD=360MW	0471	2N3251
A4A8Q4	1855-0267		1	TRANSISTOR J-FET N-CHAN D-MODE TO-92 SI	3467	
A4A8Q5	1854-0404		1	TRANSISTOR NPN SI TO-18 PD=360MW	0471.	
A4A8Q6	1853-0007		1	TRANSISTOR PNP 2N3251 SI TO-18 PD=360MW	0471:	2N3251
A4A8Q7	1853-0007		1	TRANSISTOR PNP 2N3251 SI TO-18 PD=360MW	0471:	2N3251
A4A8Q8	1855-0267		1	TRANSISTOR J-FET N-CHAN D-MODE TO-92 SI	3467;	
A4A8Q9	1853-0007		1	TRANSISTOR PNP 2N3251 SI TO-18 PD=360MW	0471:	2N3251
A4A8Q10	1855-0267		1	TRANSISTOR J-FET N-CHAN D-MODE TO-92 SI	3467;	
A4A8Q11	1854-0404		1	TRANSISTOR NPN SI TO-18 PD=360MW	0471:	
A4A8R1	0757-0395		1	RESISTOR 56.2 +-1% .125W TF TC=O+-100	19701	SFR25H
A4A8R2	0698-0083		1	RESISTOR 1.96K 1% .125W TF TC=O+-100	19701	SFR25H
A4A8R3	0757-0401		1	RESISTOR 100 +-1% .125W TF TC=O+-100	19701	SFR25H
A4A8R4	0757-0294		1	RESISTOR 17.8 +-1% .125W TF TC=O+-100	19701	SFR25H
A4A8R5	0757-0401		1	RESISTOR 100 +-1% .125W TF TC=O+-100	19701	SFR25H
A4A8R6	2100-3053		1	RESISTOR-TRMR 20 20% TKF SIDE-AOJ 17-TRN	73136	89PR20
A4A8R7	21100-3052		1	RESISTOR-TRMR 50 10% TKF SIDE-ADJ 17-TRN	73131	89PR50
A4A8R8	01757-0416		1	RESISTOR 511 +-1% .125W TF TC=O+-100	1970:	SFR25H
A4A8R9	0698-3260		1	RESISTOR 464K 1% .125W TF TC=O+-100	19701	SFR25H
A4A8R10	0698-3260		1	RESISTOR 464K 1% .125W TF TC=O+-100	19701	SFR25H
A4A8R11	0757-0280		1	RESISTOR 1K +-1% .125W TF TC=O+-100	19701	SFR25H
A4A8R12	0757-0401		1	RESISTOR 100 +-1% .125W TF TC=O+-100	19701	SFR25H
A4A8R13	0757-0280		1	RESISTOR 1K +-1% .125W TF TC=O+-100	19701	SFR25H
A4A8R14	0698-3155		1	RESISTOR 4.64K 1% .125W TF TC=O+-100	19701	SFR25H
A4A8R15	0698-0082		1	RESISTOR 464 1% .125W TF TC=O+-100	19701	SFR25H
A4A8R16	0698-3429		1	RESISTOR 19.6 1% .125W TF TC=O+-100	19701	SFR25H
A4A8R17	0757-0443		1	RESISTOR 11K +-1% .125W TF TC=O+-100	19701	SFR25H
A4A8R18	0757-0438		1	RESISTOR 5.11K +-1% .125W TF TC=O+-100	19701	SFR25H
A4A8R19*	0698-3260		1	RESISTOR 464K 1% .125W TF TC=O+-100	19701	SFR25H
A4A8R20	0698-3441		1	RESISTOR 215 1% .125W TF TC=O+-100	19701	SFR25H
A4A8R21	0698-3444		1	RESISTOR 316 1% .125W TF TC=O+-100	19701	SFR25H
A4A8R22	0698-3442		1	RESISTOR 237 1% .125W TF TC=O+-100	19701	SFR25H
A4A8R23	0757-0279		1	RESISTOR 3.16K +-1% .125W TF TC=O+-100	19701	SFR25H
A4A8R24*	0757-0346		1	RESISTOR 10 +-1% .125W TF TC=O+-100	91637	CMF-55-1. T-1
A4A8R25	0757-0280		1	RESISTOR 1K +-1% .125W TF TC=O+-100	19701	SFR25H
A4A8R26*	0757-0290		1	RESISTOR 6.19K +-1% .125W TF TC=O+-100	19701	SFR25H
A4A8R27	0757-0290		1	RESISTOR 6.19K +-1% .125W TF TC=O+-100	19701	SFR25H
A4A8R28	0757-0290		1	RESISTOR 6.19K +-1% .125W TF TC=O+-100	19701	SFR25H
A4A8R29*	0757-0278		1	RESISTOR 1.78K +-1% .125W TF TC=O+-100	19701	SFR25H
A4A8R30*	0757-0200		1	RESISTOR 5.621: +-1% .125W TF TC=O+-100	19701	SFR25H
A4A8R31	0698-3156		1	RESISTOR 14.7K 1% .125W TF TC=O+-100	19701	SFR25H
A4A8R32	0698-3156		1	RESISTOR 14.7K 1% .125W TF TC=O+-100	19701	SFR25H
A4A8R33	0757-0280		1	RESISTOR 1K +-1% .125W TF TC=O+-100	19701	SFR25H
A4A8R34*				SEE SCHEMATIC FUNCTION BLOCK J		
A4A8R35	2100-3163		1	RESISTOR-TRMR 1M 20% TKF SIDE-ADJ 17-TRN	73138	89PR1M
A4A8R36*				SEE SCHEMATIC FUNCTION BLOCK J		
A4A8R38	0757-1094		1	RESISTOR 1.47K +-1% .125W TF TC=O+-100	19701	SFR25H
A4A8R39	0757-0442		1	RESISTOR 10K +-1% .125W TF TC=O+-100	19701	SFR25H
A4A8R40	2100-3052		1	RESISTOR-TRMR 50 10% TKF SIDE-ADJ 17-TRN	73138	89PR50

**Indicates factory-selected value*

HP Part Number 85662-60131

A4A8 Attenuator-Bandwidth Filter

Reference Designation	HP Part Number	CD	Qty	Description	Mfr Code	Mfr Part Number
A4A8R41	0757-0401	0	1	RESISTOR 100 +-1% .125W TF TC=0+-100	19701	SFR25H
A4A8R42	0757-0280	3	1	RESISTOR 1K +-1% .125W TF TC=0+-100	19701	SFR25H
A4A8R43	0698-3155	1	1	RESISTOR 4.641: 1% .125W TF TC=0+-100	19701	SFR25H
A4A8R44	0698-0082	7	1	RESISTOR 464 1% .125W TF TC=0+-100	19701	SFR25H
A4A8R45	0757-0443	0	1	RESISTOR 11K +-1% .125W TF TC=0+-100	19701	SFR25H
A4A8R46	0757-0438	3	1	RESISTOR 5.11K +-1% .125W TF TC=0+-100	19701	SFR25H
A4A8R47	0698-3441	8	1	RESISTOR 215 1% .125W TF TC=0+-100	19701	SFR25H
A4A8R48	0698-3444	1	1	RESISTOR 316 1% .125W TF TC=0+-100	19701	SFR25H
A4A8R49	0698-3442	9	1	RESISTOR 237 1% .125W TF TC=0+-100	19701	SFR25H
A4A8R50	0757-0280	3	1	RESISTOR 1K +-1% .125W TF TC=0+-100	19701	SFR25H
A4A8R51	0757-0279	0	1	RESISTOR 3.16K +-1% .125W TF TC=0+-100	19701	SFR25H
A4A8R52*	0757-0290	5	1	RESISTOR 6.19K +-1% .125W TF TC=0+-100	19701	SFR25H
A4A8R53	0757-0290	5	1	RESISTOR 6.19K +-1% .125W TF TC=0+-100	19701	SFR25H
A4A8R54	0757-0290	5	1	RESISTOR 6.19K +-1% .125W TF TC=0+-100	19701	SFR25H
A4A8R55*	0757-0200	7	1	RESISTOR 5.621: +-1% .125W TF TC=0+-100	19701	SFR25H
A4A8R56	0698-3156	2	1	RESISTOR 14.7K 1% .125W TF TC=0+-100	19701	SFR25H
A4A8R57	0698-3156	2	1	RESISTOR 14.7K 1% .125W TF TC=0+-100	19701	SFR25H
A4A8R58	0698-3440	7	1	RESISTOR 196 1% .125W TF TC=0+-100	19701	SFR25H
A4A8R59	0698-0082	7	1	RESISTOR 464 1% .125W TF TC=0+-100	19701	SFR25H
A4A8R60	0698-3154	0	1	RESISTOR 4.22K 1% .125W TF TC=0+-100	19701	SFR25H
A4A8R61	0698-3154	0	1	RESISTOR 4.22K 1% .125W TF TC=0+-100	19701	SFR25H
A4A8R62	0757-0280	3	1	RESISTOR 1K +-1% .125W TF TC=0+-100	19701	SFR25H
A4A8R63	0698-3443	0	1	RESISTOR 287 1% .125W TF TC=0+-100	19701	SFR25H
A4A8R64	0757-0401	0	1	RESISTOR 100 +-1% .125W TF TC=0+-100	19701	SFR25H
A4A8R66	0757-0438	3	1	RESISTOR 5.11K +-1% .125W TF TC=0+-100	19701	SFR25H
A4A8R67	0757-0438	3	1	RESISTOR 5.11K +-1% .125W TF TC=0+-100	19701	SFR25H
A4A8R68	0757-0280	3	1	RESISTOR 1K +-1% .125W TF TC=0+-100	19701	SFR25H
A4A8R69	0757-0442	9	1	RESISTOR 10K +-1% .125W TF TC=0+-100	19701	SFR25H
A4A8R70	0757-0442	9	1	RESISTOR 10K +-1% .125W TF TC=0+-100	19701	SFR25H
A4A8R71	0757-0465	6	1	RESISTOR 100K +-1% .125W TF TC=0+-100	19701	SFR25H
A4A8R72	0757-0180	2	1	RESISTOR 31.6 +-1% .125W TF TC=0+-100	19701	SFR25H
A4A8R73	0757-0180	2	1	RESISTOR 31.6 +-1% .125W TF TC=0+-100	19701	SFR25H
A4A8TP1	0360-1788	7	1	CONNECTOR-SGL CONT PIN .045-IN-BSC-SZ SQ	04574	
A4A8TP2	0360-1788	7	1	CONNECTOR-SGL CONT PIN .045-IN-BSC-SZ SQ	04574	
A4A8TP3	1251-0600	0	1	CONNECTOR-SGL CONT PIN 1.14-MM-BSC-SZ SQ	27264	16-06-0034
A4A8TP4	0360-1788	7	1	CONNECTOR-SGL CONT PIN .045-IN-BSC-SZ SQ	04574	
A4A8TP5	0360-1788	7	1	CONNECTOR-SGL CONT PIN .045-IN-BSC-SZ SQ	04574	
A4A8TP6	1251-0600	0	1	CONNECTOR-SGL CONT PIN 1.14-MM-BSC-SZ SQ	27264	16-06-0034
A4A8TP7	1251-0600	0	1	CONNECTOR-SGL CONT PIN 1.14-MM-BSC-SZ SQ	27264	16-06-0034
A4A8TP8	1251-0600	0	1	CONNECTOR-SGL CONT PIN 1.14-MM-BSC-SZ SQ	27264	16-06-0034
A4A8TP9	1251-0600	0	1	CONNECTOR-SGL CONT PIN 1.14-MM-BSC-SZ SQ	27264	16-06-0034
A4A8VR1	1902-3139	7	1	DIODE-ZNR 8.25V 5% DO-35 PD=.4W	04713	
A4A8Y1				CRYSTAL, QUARTZ, PART OF A MATCHED SET OF SIX, INCLUDES A4A4Y1-3, A4A6A1Y1, AND A4A8Y1-2 (REFER TO A4A4Y1)		
A4A8Y2				CRYSTAL, QUARTZ, PART OF A MATCHED SET OF SIX, INCLUDES A4A4Y1-3, A4A6A1Y1, AND A4A8Y1-2 (REFER TO A4A4Y1)		

**Indicates factory-selected value*

HP Part Number 85662-60190

A4A8 Attenuator-Bandwidth Filter

Reference Designation	HP Part Number	CD	Qty	Description	Mfr Code	Mfr Part Number
A4A8	85662-60190	9	1	BOARD ASSEMBLY, ATTENUATOR-BANDWIDTH FILTER (SERIAL PREFIX: 2810A)	28480	85662-60190
A4A8C1	0140-0200	0	1	CAPACITOR-FXO 390PF +-5% 300VDC MICA 0+7	09023	CD15FD391J03
A4A8C2	0160-4832	4	1	CAPACITOR-FXD .01UF +-10% 100VDC CER	04222	SA101C103KAAH
A4A8C3	0160-4832	4	1	CAPACITOR-FXD .01UF +-10% 100VDC CER	04222	SA101C103KAAH
A4A8C4	0160-4832	4	1	CAPACITOR-FXD .01UF +-10% 100VDC CER	04222	SA101C103KAAH
A4A8C5	0160-4832	4	1	CAPACITOR-FXD .01UF +-10% 100VDC CER	04222	SA101C103KAAH
A4A8C6	0160-4832	4	1	CAPACITOR-FXD .01UF +-10% 100VDC CER	04222	SA101C103KAAH
A4A8C7	0160-4832	4	1	CAPACITOR-FXD .01UF +-10% 100VDC CER	04222	SA101C103KAAH
A4A8C8	0160-4832	4	1	CAPACITOR-FXD .01UF +-10% 100VDC CER	04222	SA101C103KAAH
A4A8C9	0160-4832	4	1	CAPACITOR-FXD .01UF +-10% 100VDC CER	04222	SA101C103KAAH
A4A8C11	0160-4832	4	1	CAPACITOR-FXO .01UF +-10% 100VDC CER	04222	SA101C103KAAH
A4A8C12	0160-4792	5	1	CAPACITOR-FXD 8.2PF +-.5PF 100VDC CER	04222	SA102A8R2DAAH
A4A8C13	0121-0059	7	1	CAPACITOR-V TRMR-CER 2-8PF 350V PC-MTG	52763	304-324-139
A4A8C14*	0160-4795	8	1	CAPACITOR-FXD 4.7PF +-.5PF IOOVDC CER	04222	SA102A4R7DAAH
A4A8C15	0160-4832	4	1	CAPACITOR-FXD .01UF +-10% IOOVDC CER	04222	SA101C103KAAH
A4A8C16	0160-4832	4	1	CAPACITOR-FXD .01UF +-10% 100VDC CER	04222	SA101C103KAAH
A4A8C17	0160-2207	3	1	CAP-FXD 300pF 300 V MICA	09023	CD15FD301J03
A4A8C18	0160-4832	4	1	CAPACITOR-FXD .01UF +-10% 100VDC CER	04222	SA101C103KAAH
A4A8C19	0160-4833	5	1	CAPACITOR-FXD .022UF +-10% 100VDC CER	04222	SA201C223KAAH
A4A8C20	0160-4832	4	1	CAPACITOR-FXD .01UF +-10% 100VDC CER	04222	SA101C103KAAH
A4A8C21	0160-4574	1	1	CAPACITOR-FXD 1000PF +-10% IOOVDC CER	04222	SA101C102KAAH
A4A8C22	0160-4832	4	1	CAPACITOR-FXD .01UF +-10% 100VDC CER	04222	SA101C103KAAH
A4A8C23	0160-4832	4	1	CAPACITOR-FXD .01UF +-10% 100VDC CER	04222	SA101C103KAAH
A4A8C24	0160-4832	4	1	CAPACITOR-FXD .01UF +-10% 100VDC CER	04222	SA101C103KAAH
A4A8C25	0160-4832	4	1	CAPACITOR-FXD .01UF +-10% 100VDC CER	04222	SA101C103KAAH
A4A8C26	0160-4833	5	1	CAPACITOR-FXD .022UF +-10% 100VDC CER	04222	SA201C223KAAH
A4A8C27	0160-4832	4	1	CAPACITOR-FXD .01UF +-10% 100VDC CER	04222	SA101C103KAAH
A4A8C28	0160-4832	4	1	CAPACITOR-FXD .01UF +-10% 100VDC CER	04222	SA101C103KAAH
A4A8C29	0121-0444	4	1	CAP-VAR 9pF 3pF 160 V	52763	302-450-204
A4A8C30	0160-4832	4	1	CAPACITOR-FXD .01UF +-10% 100VDC CER	04222	SA101C103KAAH
A4A8C31	0160-4832	4	1	CAPACITOR-FXD .01UF +-10% 100VDC CER	04222	SA101C103KAAH
A4A8C32	0121-0036	0	1	CAPACITOR-V TRMR-CER 5.5-18PF 350V PC-MT	52763	304-324-237
A4A8C33	0160-4832	4	1	CAPACITOR-FXD .01UF +-10% 100VDC CER	04222	SA101C103KAAH
A4A8C34	0160-0437	7	1	CAP-FXD 12pF 500 V		301-000-P3K0-120J
A4A8C35*	0160-0134	1	1	CAPACITOR-FXD 220PF +-5% 300VDC MICA 0+7	09023	CD15FD221J03
A4A8C36	0160-4832	4	1	CAPACITOR-FXD .01UF +-10% 100VDC CER	04222	SA101C103KAAH
A4A8C38	0160-4832	4	1	CAPACITOR-FXD .01UF +-10% 100VDC CER	04222	SA101C103KAAH
A4A8C39	0160-4833	5	1	CAPACITOR-FXD .022UF +-10% IOOVDC CER	04222	SA201C223KAAH
A4A8C40	0160-4832	4	1	CAPACITOR-FXD .01UF +-10% 100VDC CER	04222	SA101C103KAAH
A4A8C41	0160-5899	5	1	CAPACITOR-FXD 7.5PF +-.5PF 200VDC CER 0+		MA12C0G2D7R5D
A4A8C42	0121-0059	7	1	CAPACITOR-V TRMR-CER 2-8PF 350V PC-MTG	52763	304-324-139
A4A8C43*	0160-4795	8	1	CAPACITOR-FXD 4.7PF +-.5PF 100VDC CER	04222	SA102A4R7DAAH
A4A8C44	0121-0444	4	1	CAP-VAR 9pF 3pF 160 V	52763	302-450-204
A4A8C45	0160-4832	4	1	CAPACITOR-FXD .01UF +-10% 100VDC CER	04222	SA101C103KAAH
A4A8C46	0121-0036	0	1	CAPACITOR-V TRMR-CER 5.5-18PF 350V PC-MT	52763	304-324-237
A4A8C47	0160-4832	4	1	CAPACITOR-FXD .01UF +-10% 100VDC CER	04222	SA101C103KAAH

**Indicates factory-selected value*

HP Part Number 85662-60190

A4A8 Attenuator-Bandwidth Filter

Reference Designatior	HP Part Number	C. D	Qty	Description	Mfr Code	Mfr Part Number
A4A8C48	0160-0437	7	1	CAP-FXD 12pF 500 V		301-000-P3K0-120J
A4A8C49*	0160-0134	1	1	CAPACITOR-FXD 220PF +-5% 300VDC MICA 0+	0902:	CD15FD221J03
A4A8C50	0160-4574	1	1	CAPACITOR-FXO 1000PF +-10% 100VDC CER	04222	SA101C102KAAH
A4A8C51	0160-4832	4	1	CAPACITOR-FXD .01UF +-10% 100VDC CER	04222	SA101C103KAAH
A4A8C52	0160-4832	4	1	CAPACITOR-FXD .01UF +-10% 100VDC CER	04222	SA101C103KAAH
A4A8C53	0160-4832	4	1	CAPACITOR-FXD .01UF +-10% 100VDC CER	04222	SA101C103KAAH
A4A8C54	0160-4832	4	1	CAPACITOR-FXD .01UF +-10% 100VDC CER	04222	SA101C103KAAH
A4A8C55	0160-4832	4	1	CAPACITOR-FXD .01UF +-10% 100VDC CER	04222	SA101C103KAAH
A4A8C56	0160-4832	4	1	CAPACITOR-FXD .01UF +-10% 100VDC CER	04222	SA101C103KAAH
A4A8C57	0160-4832	4	1	CAPACITOR-FXO .01UF +-10% 100VDC CER	04222	SA101C103KAAH
A4A8C58	0160-4832	4	1	CAPACITOR-FXD .01UF +-10% 100VDC CER	04222	SA101C103KAAH
A4A8C59	0160-4832	4	1	CAPACITOR-FXD .01UF +-10% 100VDC CER	04222	SA101C103KAAH
A4A8C60	3160-4833	5	1	CAPACITOR-FXD .022UF +-10% 100VDC CER	04222	SA201C223KAAH
A4A8C61	0160-4832	4	1	CAPACITOR-FXD .01UF +-10% 100VDC CER	04222	SA101C103KAAH
A4A8C62	0160-4832	4	1	CAPACITOR-FXD .01UF +-10% 100VDC CER	04222	SA101C103KAAH
A4A8C63*	1140-0194	1	1	CAPACITOR-FXD 110PF +-5% 300VDC MICA	09023	CD15FD111J03
A4A8C64	X60-4832	4	1	CAPACITOR-FXO .01UF +-10% 100VDC CER	04222	SA101C103KAAH
A4A8C65	1160-4832	4	1	CAPACITOR-FXD .01UF +-10% 100VDC CER	04222	SA101C103KAAH
A4A8C66	1121-0452	4	1	CAPACITOR-V TRMR-AIR 1.3-5.4PF 175V PC-M	74970	187-0103-028
A4A8C67	1121-0452	4	1	CAPACITOR-V TRHR-AIR 1.3-5.4PF 175V PC-t'	74970	187-0103-028
A4A8C68	0160-4832	4	1	CAPACITOR-FXD .01UF +-10% 100VDC CER	04222	SA101C103KAAH
A4A8C69	0160-4832	4	1	CAPACITOR-FXO .01UF +-10% 100VDC CER	04222	SA101C103KAAH
A4A8C70	0160-2207	3	1	CAP-FXD 300pF 300 V MICA	09023	CD15FD301J03
A4A8C71	0160-4832	4	1	CAPACITOR-FXD .01UF +-10% 100VDC CER	04222	SA101C103KAAH
A4A8C72	0160-4835	7	1	CAPACITOR-FXD .1UF +-10% 50VDC CER	04222	SA115C104KAAH
A4A8C73	0160-4835	7	1	CAPACITOR-FXO .1UF +-10% 50VDC CER	04222	SA115C104KAAH
A4A8C74	0160-4832	4	1	CAPACITOR-FXD .01UF +-10% 100VDC CER	04222	SA101C103KAAH
A4A8C75	0160-4832	4	1	CAPACITOR-FXD .01UF +-10% 100VDC CER	04222	SA101C103KAAH
A4A8C76	1160-4832	4	1	CAPACITOR-FXD .01UF +-10% 100VDC CER	04222	SA101C103KAAH
A4A8C77	0160-5902	1	1	CAPACITOR-FXD 11PF +-5% 200VDC CER 0+-30		MA12C0G2D110J
A4A8C78*	0140-0198	5	1	CAPACITOR-FXD 200PF +-5% 300VDC MICA	09023	CD15FD201J03
A4A8C79	1160-4832	4	1	CAPACITOR-FXD .01UF +-10% 100VDC CER	04222	SA101C103KAAH
A4A8C80	1160-5902	1	1	CAPACITOR-FXD 11PF +-5% 200VDC CER 0+-30		MA12C0G2D110J
A4A8C81*	0140-0198	5	1	CAPACITOR-FXD 200PF +-5% 300VDC MICA	09023	CD15FD201J03
A4A8C82	1160-6634	3	1	CAP-FXD 9pF 50 V		CC45UJ1H090DYP
A4A8C83	1160-6634	3	1	CAP-FXD 9pF 50 V		CC45UJ1H090DYP
A4A8CR2	901-1070	3	1	DIODE-PIN 110V	28480	
A4A8CR3	901-1070	3	1	DIODE-PIN 110V	28480	
A4A8CR4	901-0047	3	1	DIODE-SWITCHING 20V 75MA 10NS DO-35	71468	
A4A8CR5	901-0047	3	1	DIODE-SWITCHING 20V 75MA 10NS DO-35	71468	
A4A8CR6	901-1070	3	1	DIODE-PIN 110V	28480	
A4A8CR7	901-1070	3	1	DIODE-PIN 110V	28480	
A4A8CR8	901-0535	3	1	DIODE-SCHOTTKY SM SIG		
A4A8CR9	901-0047	3	1	DIODE-SWITCHING 20V 75MA 10NS DO-35	71468	
A4A8CR10	901-0535	3	1	DIODE-SCHOTTKY SM SIG		
A4A8CR11	901-0047	3	1	DIODE-SWITCHING 20V 75MA 10NS DO-35	71468	
A4A8CR12	901-0047	3	1	DIODE-SWITCHING 20V 75MA IONS DO-35	71468	
A4A8CR13	901-1070	3	1	DIODE-PIN 110V	28480	

**Indicates factory-selected value*

HP Part Number 85662-60190

A4A8 Attenuator-Bandwidth Filter

Reference Designation	HP Part Number	CD	Qty	Description	Mfr Code	Mfr Part Number
A4A8CR14	1901-0535	9	1	DIODE-SCHOTTKY SM SIG		
A4A8CR15	1901-0047	8	1	DIODE-SWITCHING 20V 75MA 10NS DO-35	71468	
A4A8CR16	1901-0535	9	1	DIODE-SCHOTTKY SM SIG		
A4A8CR17	1901-1070	9	1	DIODE-PIN 110V	28480	
A4A8CR18	1901-1070	9	1	DIODE-PIN 110V	28480	
A4A8CR19	1901-0535	9	1	DIODE-SCHOTTKY SM SIG		
A4A8E1	9170-0029	3	1	CORE-SHIELDING BEAD	02114	56-590-65A2/4A
A4A8E3	9170-0029	3	1	CORE-SHIELDING BEAD	02114	56-590-65A2/4A
A4A8E4	9170-0029	3	1	CORE-SHIELDING BEAD	02114	56-590-65A2/4A
A4A8E5	9170-0029	3	1	CORE-SHIELDING BEAD	02114	56-590-65A2/4A
A4A8E6	9170-0029	3	1	CORE-SHIELDING BEAD	02114	56-590-65A2/4A
A4A8E8	9170-0029	3	1	CORE-SHIELDING BEAD	02114	56-590-65A2/4A
A4A8E9	9170-0029	3	1	CORE-SHIELDING BEAD	02114	56-590-65A2/4A
A4A8E10	9170-0029	3	1	CORE-SHIELDING BEAD	02114	56-590-65A2/4A
A4A8E11	9170-0029	3	1	CORE-SHIELDING BEAD	02114	56-590-65A2/4A
A4A8E12	9170-0029	3	1	CORE-SHIELDING BEAD	02114	56-590-65A2/4A
A4A8E13	9170-0029	3	1	CORE-SHIELDING BEAD	02114	56-590-65A2/4A
A4A8E14	9170-0029	3	1	CORE-SHIELDING BEAD	02114	56-590-65A2/4A
A4A8E15	9170-0029	3	1	CORE-SHIELDING BEAD	02114	56-590-65A2/4A
A4A8J1	1250-2112	1	1	CONNECTOR-RF SMB M SGL-HOLE-FR SO-OHM	98291	051-047-0259-220
A4A8L1	9100-3314	8	1	INDUCTOR RF-CH-MLD 150NH +-5% .166D-INX.	24226	15M150J
A4A8L2	9100-3313	7	1	INOUCTOR RF-CH-MLD 22UH +-5% .166D-INX.3	24226	15M222J
A4A8L3	9140-0453	4	1	INDUCTOR RF-CH-MLD 6.8UH +-5% .166D-INX.	24226	15M-681J
A4A8L4	9100-3560	6	1	INDUCTOR RF-CH-MLD 5.6UH +-5% .166D-INX.	24226	15M561J
A4A8L5	9100-0539	3	1	INDUCTOR RF-CH-MLD 10UH +-5% .156D-INX.3	24226	15M102J
A4A8L6	9100-0539	3	1	INDUCTOR RF-CH-MLD 10UH +-5% .156D-INX.3	24226	15M102J
A4A8L7	9100-2813	0	1	INDUCTOR 385NH +-5% .312D-INX1.016LG-IN	52763	5087-0273-1
A4A8L8	9140-0399	7	1	INDUCTOR RF-CH-MLD 2.2UH +-5% .166D-INX.	24226	15M221J
A4A8L9	9100-3912	2	1	INDUCTOR RF-CH-MLD 15UH +-5% .166D-INX.3	24226	15M152J
A4A8L10	9140-0453	4	1	INDUCTOR RF-CH-MLD 6.8UH +-5% .166D-INX.	24226	15M-681J
A4A8L11	9100-3560	6	1	INDUCTOR RF-CH-MLD 5.6UH +-5% .166D-INX.	24226	15M561J
A4A8L12	9100-3560	6	1	INDUCTOR RF-CH-MLD 5.6UH +-5% .166D-INX.	24226	15M561J
A4A8L13	9100-0539	3	1	INDUCTOR RF-CH-MLD 10UH +-5% .156D-INX.3	24226	15M102J
A4A8L14	9100-2813	0	1	INDUCTOR 385NH +-5% .312D-INX1.016LG-IN	52763	5087-0273-1
A4A8L15	9140-0398	6	1	INDUCTOR RF-CH-MLD 12UH +-5% .166D-INX.3	24226	15M122J
A4A8L16	9100-3912	2	1	INDUCTOR RF-CH-MLD 15UH +-5% .166D-INX.3	24226	15M152J
A4A8L17	9140-0399	7	1	INDUCTOR RF-CH-MLD 2.2UH +-5% .166D-INX.	24226	15M221J
A4A8L19	9100-3560	6	1	INDUCTOR RF-CH-MLD 5.6UH +-5% .166D-INX.	24226	15M561J
A4A8L20	9100-3313	7	1	INDUCTOR RF-CH-MLD 22UH +-5% .166D-INX.3	24226	15M222J
A4A8L33	9100-3551	5	1	INDUCTOR RF-CH-MLD 1UH +-5% .166D-INX.38	24226	15M101J
A4A8L34	9100-3562	8	1	INDUCTOR RF-CH-MLD 4.7UH +-5% .166D-INX.	24226	15M471J
A4A8L35	9100-3562	8	1	INDUCTOR RF-CH-MLD 4.7UH +-5% .166D-INX.	24226	15M471J
A4A8MP1				NOT ASSIGNED		
A4A8MP2	86701-40001	9	1	EXTRACTOR PC	28480	86701-40001
A4A8MP5	2190-0557	7	1	WASHER-LK INTL T NO. 10 .195-IN-ID	78189	1210-06-00-0551
A4A8MP6	2950-0078	9	1	NUT-HEX-OBL-CHAM 10-32-THD .067-IN-THK	74163	500220
A4A8MP7	2200-0101	0	4	SCREW-MACH 4-40 .188-IN-LG PAN-HD-POZI	77250	

**Indicates factory-selected value*

HP Part Number 85662-60190

A4A8 Attenuator-Bandwidth Filter

Reference Designation	HP Part Number	CD	Qty	Description	Mfr Code	Mfr Part Number
A4A8MP8	6960-0069	3	1	PLUG-HOLE CNCL-HD FOR .125-D-HOLE NYL	02768	207-080501-00-0101
A4A8MP9	85662-20038	0	1	COVER, ATTENUATOR-BANDWIDTH FILTER	28480	85662-20038
A4A8MP11	1200-0081	4	1	INSULATOR-FLG-BSHG NYLON	26365	974 307
A4A8MP12	1200-0081	4	1	INSULATOR-FLG-BSHG NYLON	26365	974 307
A4A8MP13	1200-0081	4	1	INSULATOR-FLG-8SHG NYLON	26365	974 307
A4A8MP14	1200-0081	4	1	INSULATOR-FLG-BSHG NYLON	26365	974 307
A4A8Q1	1854-0345	8	1	TRANSISTOR NPN 2N5179 SI TO-72 PD=200MW	04713	215179
A4A8Q2	1853-0007	7	1	TRANSISTOR PNP 2N3251 SI TO-18 PD=360MW	04713	213251
A4A8Q3	1853-0007	7	1	TRANSISTOR PNP 2N3251 SI TO-18 PD=360MW	04713	2N3251
A4A8Q4	1855-0267	5	1	TRANSISTOR J-FET N-CHAN D-MODE TO-92 SI	34677	
A4A8Q5	1854-0404	0	1	TRANSISTOR NPN SI TO-18 PD=360MW	04713	
A4A8Q6	1853-0007	7	1	TRANSISTOR PNP 2N3251 SI TO-18 PD=360MW	04713	2N3251
A4A8Q7	1853-0007	7	1	TRANSISTOR PNP 213251 SI TO-18 PD=360MW	04713	2N3251
A4A8Q8	1855-0267	5	1	TRANSISTOR J-FET N-CHAN D-MODE TO-92 SI	34677	
A4A8Q9	1853-0007	7	1	TRANSISTOR PNP 2N3251 SI TO-18 PD=360MW	04713	2N3251
A4A8Q10	1855-0267	5	1	TRANSISTOR J-FET N-CHAN D-MODE TO-92 SI	34677	
A4A8Q11	1854-0404	0	1	TRANSISTOR NPN SI TO-18 PD=360MW	04713	
A4A8R1	0757-039s	1	1	RESISTOR 56.2 +-1% .125W TF TC=0+-100	19701	SFR25H
A4A8R2	0698-0083	8	1	RESISTOR 1.96K 1% .125W TF TC=0+-100	19701	SFR25H
A4A8R3	0757-0401	0	1	RESISTOR 100 +-1% .125W TF TC=0+-100	19701	SFR25H
A4A8R4	0757-0294	9	1	RESISTOR 17.8 +-1% .125W TF TC=0+-100	19701	SFR25H
A4A8R5	0757-0401	0	1	RESISTOR 100 +-1% .125W TF TC=0+-100	19701	SFR25H
A4A8R6	2100-3053	5	1	RESISTOR-TRMR 20 20% TKF SIDE-ADJ 17-TRN	73138	89PR20
A4A8R7	2100-3052	4	1	RESISTOR-TRMR 50 10% TKF SIDE-ADJ 17-TRN	73138	89PR50
A4A8R8	0757-0416	7	1	RESISTOR 511 +-1% .125W TF TC=0+-100	19701	SFR25H
A4A8R9	0698-3260	9	1	RESISTOR 464K 1% .125W TF TC=D+-100	19701	SFR25H
A4A8R10	0698-3260	9	1	RESISTOR 464K 1% .125W TF TC=0+-100	19701	SFR25H
A4A8R11	0757-0280	3	1	RESISTOR 1K +-1% .125W TF TC=0+-100	19701	SFR25H
A4A8R12	0757-0401	0	1	RESISTOR 100 +-1% .125W TF TC=0+-100	19701	SFR25H
A4A8R13	0757-0280	3	1	RESISTOR 1K +-1% .125W TF TC=0+-100	19701	SFR25H
A4A8R14	0698-3155	1	1	RESISTOR 4.64K 1% .125W TF TC=0+-100	19701	SFR25H
A4A8R15	0698-0082	7	1	RESISTOR 464 1% .125W TF TC=0+-100	19701	SFR25H
A4A8R16	0698-3429	2	1	RESISTOR 19.6 1% .125W TF TC=0+-100	19701	SFR25H
A4A8R17	0757-0443	0	1	RESISTOR 11K +-1% .125W TF TC=0+-100	19701	SFR25H
A4A8R18	0757-0438	3	1	RESISTOR 5.11K +-1% .125W TF TC=0+-100	19701	SFR25H
A4A8R19*	0698-3458	7	1	RESISTOR 348K 1% .125W TF TC=0+-100	19701	SFR25H
A4A8R20	0698-3441	B	1	RESISTOR 215 1% .125W TF TC=0+-100	19701	SFR25H
A4A8R21	0698-3444	1	1	RESISTOR 316 1% .125W TF TC=0+-100	19701	SFR25H
A4A8R22	0698-3442	9	1	RESISTOR 237 1% .125W TF TC=0+-100	19701	SFR25H
A4A8R23	0757-0279	0	1	RESISTOR 3.16K +-1% .125W TF TC=0+-100	19701	SFR25H
A4A8R24*	0757-0346	2	1	RESISTOR 10 +-1% .125W TF TC=0+-100	91637	CMF-55-1, T-l
A4A8R25	0757-0280	3	1	RESISTOR 1K +-1% .125W TF TC=0+-100	19701	SFR25H
A4A8R26*	0757-0290	5	1	RESISTOR 6.19K +-1% .125W TF TC=0+-100	19701	SFR25H
A4A8R27	0757-0290	5	1	RESISTOR 6.19K +-1% .125W TF TC=0+-100	19701	SFR25H
A4A8R28	0757-0290	5	1	RESISTOR 6.19K +-1% .125W TF TC=0+-100	19701	SFR25H
A4A8R29*	0757-0278	9	1	RESISTOR 1.78K +-1% .125W TF TC=0+-100	19701	SFR25H
A4A8R30*	0757-0200	7	1	RESISTOR 5.62K +-1% .125W TF TC=0+-100	19701	SFR25H
A4A8R31	0698-3156	2	1	RESISTOR 14.7K 1% .125W TF TC=0+-100	19701	SFR25H

**Indicates factory-selected value*

HP Part Number 85662160190

A4A8 Attenuator-Bandwidth Fitter

Reference Designation	HP Part Number	C D	Qty	Description	Mfr Code	Mfr Part Number
A4A8R32	0698-3156	2	1	RESISTOR 14.7K 1% .125W TF TC=0+-100	19701	SFR25H
A4A8R33	0757-0280	3	1	RESISTOR 1K +-1% .125W TF TC=0+-100	19701	SFR25H
A4A8R34*	0698-3451	0	1	RESISTOR 133K 1% .125W TF TC=0+-100	19701	SFR25H
A4A8R35	2100-3163	8	1	RESISTOR-TRMR 1M 20% TKF SIDE-ADJ 17-TRN	73138	89PR1M
A4A8R36*	0757-0464	5	1	RESISTOR 90.9K +-1% .125W TF TC=0+-100	19701	SFR25H
A4A8R38	0757-1094	9	1	RESISTOR 1.47K +-1% .125W TF TC=0+-100	19701	SFR25H
A4A8R39	0757-0442	9	1	RESISTOR 10K +-1% .125W TF TC=0+-100	19701	SFR25H
A4A8R40	2100-3052	4	1	RESISTOR-TRMR 50 10% TKF SIDE-ADJ 17-TRN	73138	89PR50
A4A8R41	0757-0401	0	1	RESISTOR 100 +-1% .125W TF TC=D+-100	19701	SFR25H
A4A8R42	0757-0280	3	1	RESISTOR 1K +-1% .125W TF TC=0+-100	19701	SFR25H
A4A8R43	0698-3155	1	1	RESISTOR 4.641: 1% .125W TF TC=D+-100	19701	SFR25H
A4A8R44	0698-0082	7	1	RESISTOR 464 1% .125W TF TC=0+-100	19701	SFR25H
A4A8R45	0757-0443	0	1	RESISTOR 11K +-1% .125W TF TC=0+-100	19701	SFR25H
A4A8R46	0757-0438	3	1	RESISTOR 5.11K +-1% .125W TF TC=0+-100	19701	SFR25H
A4A8R47	0698-3441	8	1	RESISTOR 215 1% .125W TF TC=0+-100	19701	SFR25H
A4A8R48	0698-3444	1	1	RESISTOR 316 1% .125W TF TC=0+-100	19701	SFR25H
A4A8R49	0698-3442	9	1	RESISTOR 237 1% .125W TF TC=0+-100	19701	SFR25H
A4A8R50	0757-0280	3	1	RESISTOR 1K +-1% .125W TF TC=0+-100	19701	SFR25H
A4A8R51	0757-0279	0	1	RESISTOR 3.16K +-1% .125W TF TC=0+-100	19701	SFR25H
A4A8R52*	0757-0290	5	1	RESISTOR 6.19K +-1% .125W TF TC=0+-100	19701	SFR25H
A4A8R53	0757-0290	5	1	RESISTOR 6.19K +-1% .125W TF TC=0+-100	19701	SFR25H
A4A8R54	0757-0290	5	1	RESISTOR 6.19K +-1% .125W TF TC=0+-100	19701	SFR25H
A4A8R55*	0757-0200	7	1	RESISTOR 5.621: +-1% .125W TF TC=0+-100	19701	SFR25H
A4A8R56	0698-3156	2	1	RESISTOR 14.7K 1% .125W TF TC=0+-100	19701	SFR25H
A4A8R57	0698-3156	2	1	RESISTOR 14.7K 1% .125W TF TC=0+-100	19701	SFR25H
A4A8R58	0698-3440	7	1	RESISTOR 196 1% .125W TF TC=0+-100	19701	SFR25H
A4A8R59	0698-0082	7	1	RESISTOR 464 1% .125W TF TC=0+-100	19701	SFR25H
A4A8R60	0698-3154	0	1	RESISTOR 4.221: 1% .125W TF TC=0+-100	19701	SFR25H
A4A8R61	0698-3154	0	1	RESISTOR 4.221: 1% .125W TF TC=0+-100	19701	SFR25H
A4A8R62	0757-0280	3	1	RESISTOR 1K +-1% .125W TF TC=0+-100	19701	SFR25H
A4A8R63	0698-3443	0	1	RESISTOR 287 1% .125W TF TC=0+-100	19701	SFR25H
A4A8R64	0757-0401	0	1	RESISTOR 100 +-1% .125W TF TC=0+-100	19701	SFR25H
A4A8R66	0757-0438	3	1	RESISTOR 5.11K +-1% .125W TF TC=0+-100	19701	SFR25H
A4A8R67	0757-0438	3	1	RESISTOR 5.11K +-1% .125W TF TC=0+-100	19701	SFR25H
A4A8R68	0757-0280	3	1	RESISTOR 1K +-1% .125W TF TC=0+-100	19701	SFR25H
A4A8R69	0757-0442	9	1	RESISTOR 10K +-1% .125W TF TC=0+-100	19701	SFR25H
A4A8R70	0757-0442	9	1	RESISTOR 10K +-1% .125W TF TC=0+-100	19701	SFR25H
A4A8R71	0757-0465	6	1	RESISTOR 100K +-1% .125W TF TC=0+-100	19701	SFR25H
A4A8R72	0757-0180	2	1	RESISTOR 31.6 +-1% .125W TF TC=0+-100	19701	SFR25H
A4A8R73	0757-0180	2	1	RESISTOR 31.6 +-1% .125W TF TC=0+-100	19701	SFR25H
A4A8TP1	0360-1788	7	1	CONNECTOR-SGL CONT PIN .045-IN-BSC-SZ SQ	04574	
A4A8TP2	0360-1788	7	1	CONNECTOR-SGL CONT PIN .045-IN-BSC-SZ SQ	04574	
A4A8TP3	1251-0600	0	1	CONNECTOR-SGL CONT PIN 1.14-MM-BSC-SZ SQ	27264	16-06-0034
A4A8TP4	0360-1788	7	1	CONNECTOR-SGL CONT PIN .045-IN-BSC-SZ SQ	04574	
A4A8TP5	0360-1788	7	1	CONNECTOR-SGL CONT PIN .045-IN-BSC-SZ SQ	04574	
A4A8TP6	1251-0600	0	1	CONNECTOR-SGL CONT PIN 1.14-MM-BSC-SZ SQ	27264	16-06-0034
A4A8VR1	1902-3139	7	1	DIODE-ZNR 8.25V 5% DO-35 PD=.4W	04713	

**Indicates factory-selected value*

HP Part Number 85662-60190

A4A8 Attenuator-Bandwidth Filter

Reference Designation	HP Part Number	C D	Qty	Description	Mfr Code	Mfr Part Number
A4A8Y1				CRYSTAL, QUARTZ, PART OF A MATCHED SET OF SIX, INCLUDES A4A4Y1-3, A4A6A1Y1, AND A4A8Y1-2 (REFER TO A4A4Y1)		
A4A8Y2				CRYSTAL, QUARTZ, PART OF A MATCHED SET OF SIX, INCLUDES A4A4Y1-3, A4A6A1Y1, AND A4A8Y1-2 (REFER TO A4A4Y1)		

Analyzer Repair Inc.

**Indicates factory-selected value*

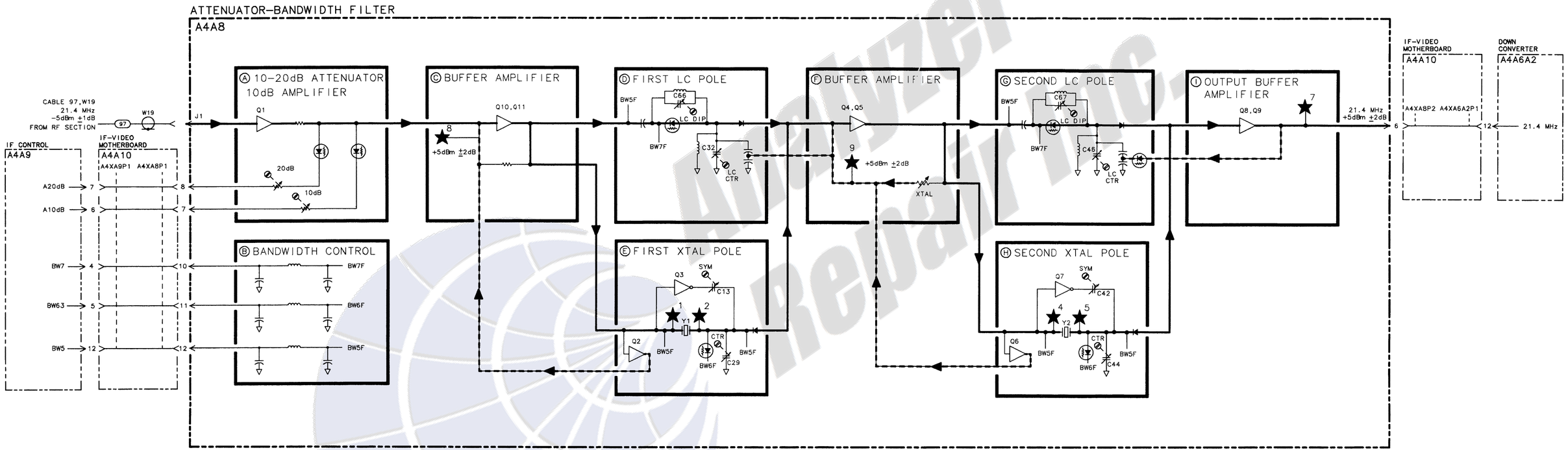

A4A8 ATTENUATOR-BANDWIDTH FILTER, BLOCK DIAGRAM

Analyzer Repair Inc.

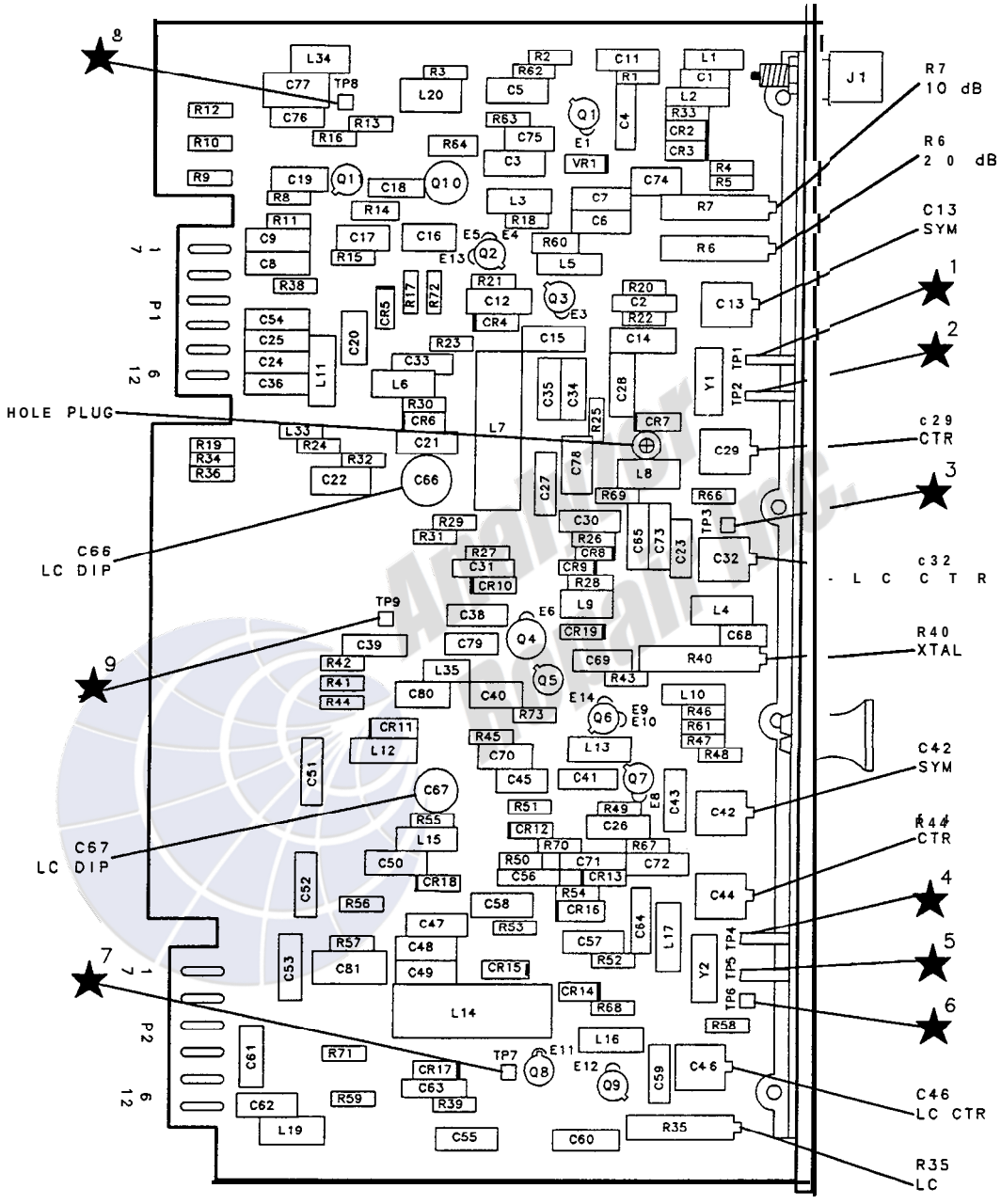

A4A8 Attenuator-Bandwidth Filter Component Locations, 85662-60131

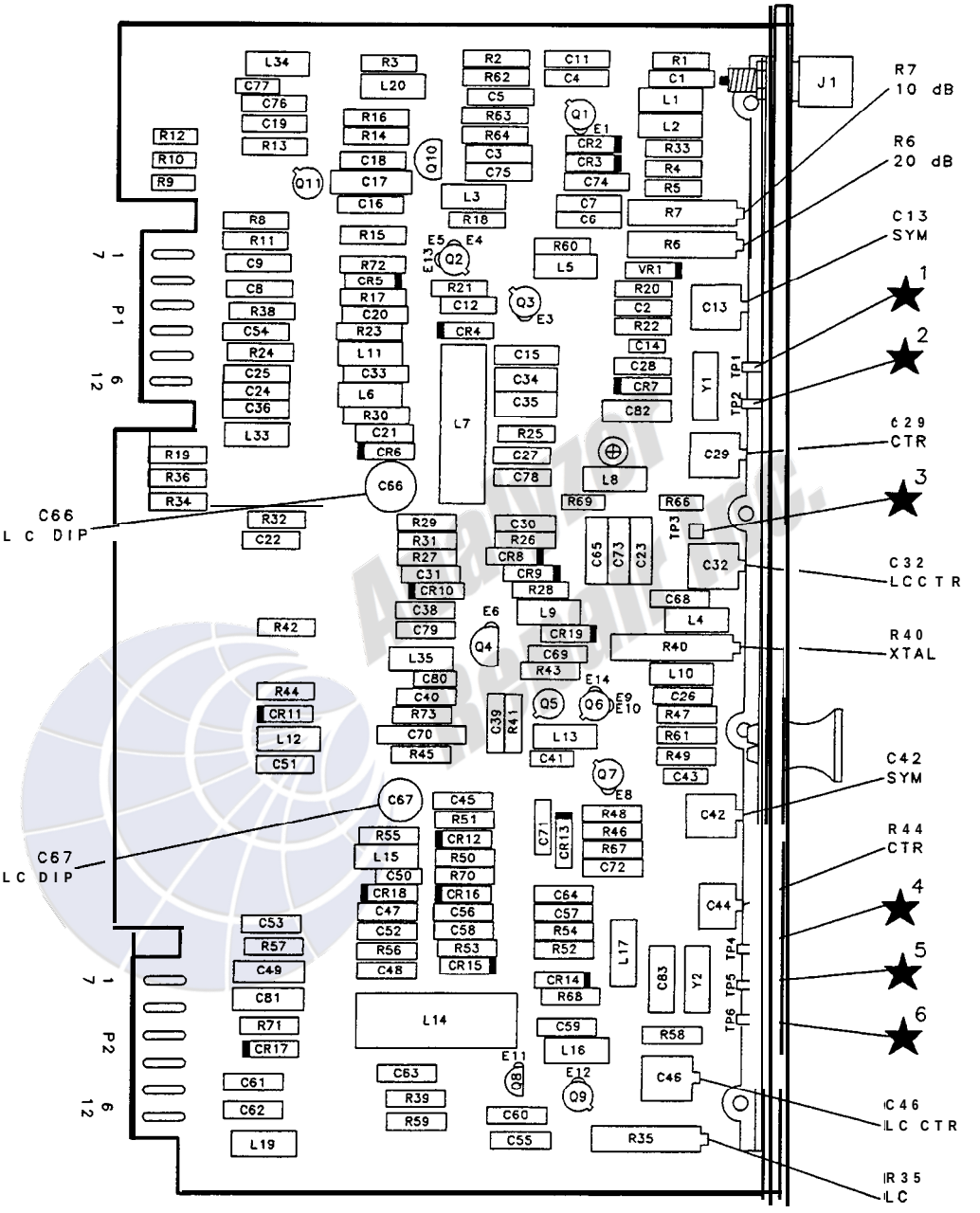

A4A8 Attenuator-Bandwidth Filter Component Locations, 85662-60190

A4A8 ATTENUATOR-BANDWIDTH FILTER
85662-60131
(SERIAL PREFIX: 2403A – 2648A)

P1

PIN	SIGNAL	TO/FROM	FUNCTION BLOCK
1	GND		J
7	A10dB	A4A9P1-6	A
2	GND		J
8	A20dB	A4A9P1-7	A
3	GND		J
9	GND		J
4	GND		J
10	BW7	A4A9P1-4	B
5	GND		J
11	BW63	A4A9P1-5	B
6	+10VF	A4A5P1-5	J
12	BW5	A4A9P1-12	B

P2

PIN	SIGNAL	TO/FROM	FUNCTION BLOCK
1	GND		J
7	GND		J
2	GND		J
8	GND		J
3	GND		J
9	GND		J
4	−15V		J
10	GND		J
5	+15V		J
11	+15V		J
6	21.4 MHz	A4A6A2,P1-12	I
12	GND		J

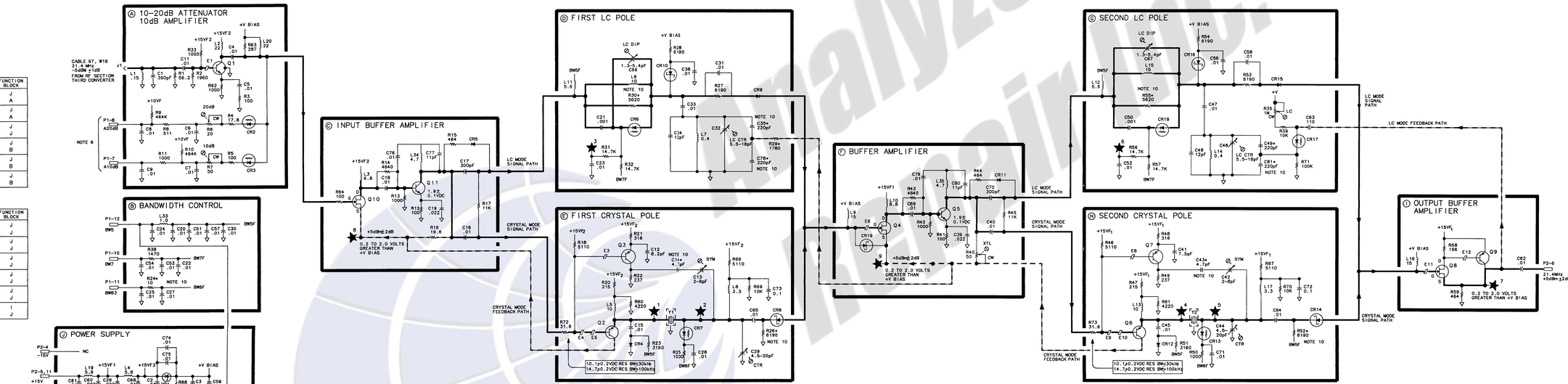

NOTES:

1. REFERENCE DESIGNATORS WITHIN THIS ASSEMBLY ARE ABBREVIATED. FOR COMPLETE REFERENCE DESIGNATION, PREFIX ABBREVIATION WITH ASSEMBLY DESIGNATION.
2. UNLESS OTHERWISE INDICATED: RESISTANCE IS IN OHMS (Ω) CAPACITANCE IS IN MICROFARADS (μF) INDUCTANCE IS IN MICROHENRIES (μH)
3. ASTERISK (*) DENOTES A FACTORY SELECTED COMPONENT. TYPICAL VALUE IS SHOWN. REFER TO NOTE 10 FOR FULL RANGE OF VALUES.
4. MNEMONIC TABLE:

MNEMONIC	DESCRIPTION
A20dB	ATTENUATION 20dB
A10dB	ATTENUATION 10dB
BW5	BANDWIDTH 5
BW7	BANDWIDTH 7(LC MODE)
BW63	BANDWIDTH 63(CRYSTAL MODE)

5. TABLE OF RESOLUTION BANDWIDTH CONTROL LINE VOLTAGES.

RESOLUTION BANDWIDTH	TYPICAL VALUES		
	BW5	BW7	BW63
3MHz	+14.8	+9.7	−14
1MHz	+14.8	+13.1	−14
300kHz	+14.8	+14.1	−14
100kHz	+14.8	+14.5	−14
30kHz	−.6	+14.3	+14.3
10kHz	−.6	+14.3	+9.2
3kHz	−.6	+14.3	+14.2
1kHz AND NARROWER	−.6	+14.3	+14.3

6.

REFERENCE LEVEL RES BW ≥ 3kHz	dBm			≤−10
REFERENCE LEVEL RES BW ≤ 1kHz	dBm	−10	−20	≤30
A20dB	LOG	0V	+9V	+9V
	LIN	0V	+9V	+9V
A10dB	LOG	+9V	0V	+9V
	LIN	+9V	0V	+9V
INPUT ATTENUATION: - - -		0dB		

7. POWER LEVELS MEASURED UNDER THE FOLLOWING CONDITIONS: INSTRUMENT PRESET

	CAL. OUT FREQ.
FREQUENCY SPAN:	0Hz
ATTENUATION:	0dB
RESOLUTION BANDWIDTH:	3kHz

8. SOURCE PIN ON Q8,Q4,AND Q10 IS INDICATED SQUARE PAD ON PC BOARD.
9. UNLESS OTHERWISE INDICATED: SIGNALS ENTER AT LEFT SIDE AND EXIT AT RIGHT SIDE OF FUNCTION BLOCKS.
10. THE COMPONENTS LISTED BELOW ARE FACTORY-SELECTED COMPONENTS. THE RANGE OF ACCEPTABLE VALUES FOR EACH FACTORY-SELECTED COMPONENT IS ALSO LISTED.

COMPONENT	ACCEPTABLE VALUES
C144*	1.0pF – 8.2pF
C34*	180pF – 270pF
C43*	1.0pF – 8.2pF
C49*	180pF – 270pF
C78*	180pF – 270pF
C81*	180pF – 270pF
R19*	100KΩ – 1MΩ
R24*	5KΩ – 100Ω
R26*	383Ω – 909Ω
R29*	909Ω – 2370Ω
R30*	3160Ω – 8250Ω
R34*	100KΩ – OPEN
R36*	100KΩ – OPEN
R52*	383Ω – 909Ω
R54*	3160Ω – 8250Ω

A4A8

A4A8 ATTENUATOR-BANDWIDTH FILTER
85662-60190
(SERIAL PREFIX: 2810A)

P1

PIN	SIGNAL	TO/FROM	FUNCTION BLOCK
1	GND		J
7	A10dB	A4A8P1-6	A
2	GND		J
8	A20dB	A4A8P1-7	A
3	GND		J
9	GND		J
4	GND		J
10	BW7	A4A8P1-4	B
5	GND		J
11	BW63	A4A8P1-5	B
6	+10VF	A4A8P1-5	J
12	BW5	A4A8P1-12	B

P2

PIN	SIGNAL	TO/FROM	FUNCTION BLOCK
1	GND		J
7	GND		J
2	GND		J
8	GND		J
3	GND		J
9	GND		J
4	-15V		J
10	GND		J
5	+15V		J
11	+15V		J
6	21.4 MHz	A4A8A2P1-12	I
12	GND		J

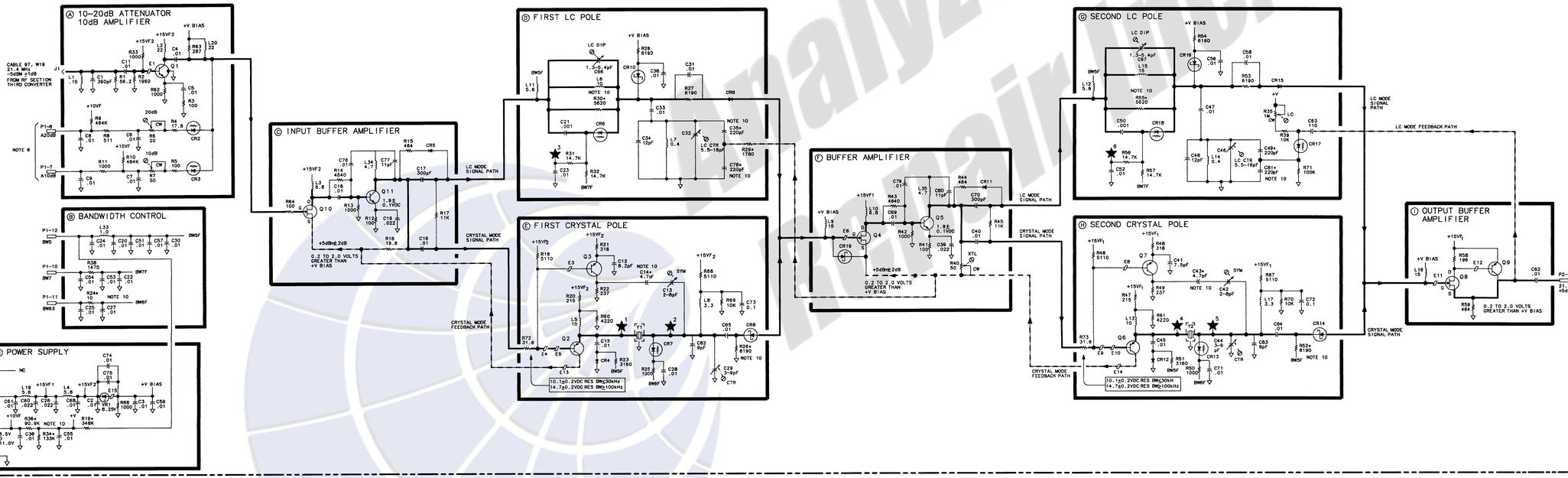

NOTES:

1. REFERENCE DESIGNATORS WITHIN THIS ASSEMBLY ARE ABBREVIATED. FOR COMPLETE REFERENCE DESIGNATION, PREFIX ABBREVIATION WITH ASSEMBLY DESIGNATION.
2. UNLESS OTHERWISE INDICATED: RESISTANCE IS IN OHMS (Ω). CAPACITANCE IS IN MICROFARADS (μF). INDUCTANCE IS IN MICROHENRIES (μH).
3. ASTERISK (*) DENOTES A FACTORY SELECTED COMPONENT. TYPICAL VALUE IS SHOWN, REFER TO NOTE 10 FOR FULL RANGE OF VALUES.
4. MNEMONIC TABLE:

MNEMONIC	DESCRIPTION
A20dB	ATTENUATION 20dB
A10dB	ATTENUATION 10dB
BW5	BANDWIDTH 5
BW7	BANDWIDTH 7(LC MODE)
BW63	BANDWIDTH 63(CRYSTAL) MODE)

5. TABLE OF RESOLUTION BANDWIDTH CONTROL LINE VOLTAGES.

RESOLUTION BANDWIDTH	TYPICAL VALUES BW5	BW7	BW63
3kHz	+14.8	+9.7	-14
1MHz	+14.8	+13.1	-14
300kHz	+14.8	+14.1	-14
100kHz	+14.8	+14.3	-14
30kHz	+14.8	+14.3	+14.3
10kHz	-.6	+14.3	+9.3
3kHz	-.6	+14.3	+9.3
1kHz AND NARROWER	-.6	+14.3	+14.3

6.

REFERENCE LEVEL RES BW ≥ 3kHz	dBm			≤-10
REFERENCE LEVEL RES BW< 1kHz	dBm	-10	-20	≤30
A20dB	LOG	0V	+9V	+9V
	LIN	0V	+9V	+9V
A10dB	LOG	+9V	0V	+9V
	LIN	+9V	0V	+9V
INPUT ATTENUATION - - -		0dB		

7. POWER LEVELS MEASURED UNDER THE FOLLOWING CONDITIONS:
   INSTRUMENT PRESET
   CENTER FREQUENCY — CAL: OUT FREQ.
   FREQUENCY SPAN — 0Hz
   ATTENUATION — 0dB
   RESOLUTION BANDWIDTH — 3kHz
8. SOURCE PIN ON Q8,Q4,AND Q10 IS INDICATED SQUARE PAD ON PC BOARD.
9. UNLESS OTHERWISE INDICATED: SIGNALS ENTER AT LEFT SIDE AND EXIT AT RIGHT SIDE OF FUNCTION BLOCKS.
10. THE COMPONENTS LISTED BELOW ARE FACTORY-SELECTED COMPONENTS. THE RANGE OF ACCEPTABLE VALUES FOR EACH FACTORY-SELECTED COMPONENT IS ALSO LISTED.

COMPONENT	ACCEPTABLE VALUES
C14*	1.0pF - 8.2pF
C35*	180pF - 2700pF
C43*	1.0pF - 8.2pF
C48*	180pF - 2700pF
C78*	180pF - 2700pF
C81*	180pF - 2700pF
R19*	100KΩ - 1MΩ
R24*	100KΩ - OPEN
R29*	3830Ω - 909ΩΩ
R30*	909Ω - 237ΩΩ
R31*	316ΩΩ - 82ΩΩ
R34*	100KΩ - OPEN
R36*	10MΩ - OPEN
R52*	3830Ω - 909ΩΩ
R55*	316ΩΩ - 82ΩΩ

A4A8

A4A9

A4A9 IF Control, Circuit Description

Control information for A4 IF-Video assembly is transmitted over the Instrument Bus from the Al5 Controller and decoded by the A4A9 IF Control.

Address Decoder Ⓑ

The Address Decoder monitors ADR O-4 and activates the input latches for addresses 20 and 21 when control line LTIO goes low. Address 20 activates input latches U10, U14, and U17 (U6, U8, and U9 in early versions of A4A9). Address 21 activates input latches U7, U18, and U20 (U3, U10, and U11 in early versions of A4A9). Table 7 of the troubleshooting information shows the line levels of the ADR control lines for addresses 20 and 21.

Input Latches Ⓐ

Input latches hold the IOB levels present at the input of the latch when the address decoder activates the input latch. Six input latches are activated (clocked) by 2 control lines (Address 20 and Address 21) from the Address Decoder Ⓑ. For example, when Address 20 goes high, input latches U10, U14, and U17 (U6, U8, and U9 in early versions of A4A9) are activated. The levels of all sixteen IOB lines, IOBO through IOB15, are held at those same levels at the outputs of U10, U14, and U17.

A0.0 to A15.9 dB Control Ⓒ

The A0.0 to A15.9 dB Control circuitry provides attenuation control voltages for the A4A5 Step Gain. Up to 14 dB of attenuation is accomplished by switching on discrete attenuation steps on the A4A5 Step Gain via the A8dB, A4dB, and A2dB control switching lines. The smaller attenuation steps (0.1 dB through 1.9 dB) are accomplished by controlling the amount of dc current through a PIN diode attenuator on A4A5. One of the outputs of U11 goes low when a particular step of attenuation is selected. The output of U19A also goes low when an odd step of attenuation is desired (0.1 dB, 0.3 dB, 1.5 dB, and so forth). The fixed resistors tied to edge- connector pin P2-7 determine the amout of current through (and hence the attenuation of) the PIN diode attenuator. The operation of the attenuator is described in A4A5.

IF Gain Control Ⓓ

The IF Gain Control interfaces with A4A5 Step Gain, the Log Amplifiers in A4A2, A4A3, and A4A1 Video Processor. Table 5 shows the conditions under which the steps are used.

Bandwidth Control Ⓔ

Bandwidths from 3 MHz to 100 kHz (BW ≥ +14.8V)

These bandwidths are produced in the 21.4 MHz IF by four parallel tank circuits (two in A4A4 Bandwidth Filter and two on A4A8 Attenuator-Bandwidth Filter). Their Q (which determines bandwidth) is controlled by PIN diodes used as variable resistors. The resistance of these PIN diodes is determined by the average current through them, which is generated by Q9. Either R60, R61, or R62 is switched in by U2, depending on which bandwidth had been selected. These potentiometers (3 MHz, 1 MHz, and 300 kHz) determine the amount of current sunk by Q9, which in turn determines the bandwidth. If no current is sunk by Q9, the filters go to their highest Q (determined by factory-selected resistors), which yields the 100 kHz bandwidth.

Bandwidths from 30 kHz to 3 kHz (BW7 = −0.6V)

These bandwidths are produced in the 21.4 MHz IF by five crystal filters (two in A4A8 and three in A4A4). Their Q (which determines bandwidth) is controlled by PIN diodes, the same as for the wider bandwidths. Refer to the preceding discussion of the wider bandwidths. Q10 is the current sink for bandwidths from 30 kHz to 3 kHz. The amount of current it sinks is selected by U2 and adjusted by potentiometers R65 and R66 (10 kHz and 3 kHz), depending on which bandwidth is selected. If no current is sunk by Q10, the filters go to their lowest Q (determined by factory-selected resistors), which yields the 30 kHz bandwidth. Q1 should be off except for the 3 MHz to 100 kHz bandwidths.

Bandwidths from 1 kHz to 10 Hz (SWITCH = 0V)

These bandwidths are produced in the 3 MHz IF (A4A7) by five crystal filters. The Q of these filters is controlled by resistors which are switched in by diodes. These, in turn, are controlled by Q25, Q26, Q28, and Q29. The transistors switch lines which are named after the bandwidths they produce. Q27 is on (saturated) only for bandwidths 1 kHz through 10 Hz.

Analyzer Repair Inc.

A4A9 IF Control, Troubleshooting

If the BW5 control line is not switching, Q3 is most likely defective. If Q3 is found to be defective, check Q6 to determine if it has failed also.

Figure 1 is reproduced from the troubleshooting for the A4A5 Step Gain. It shows the results of a quick test to determine proper operation of the 0.0 to 1.9 dB attenuator section of the A0.0 to A15.9 dB control. As the figure shows, the steps are not exactly 0.1 dB. If the steps are not continuously increasing (monotonic), either a control line is not switching or a switching diode is defective. Table 6 will be useful in determining when a control line is active.

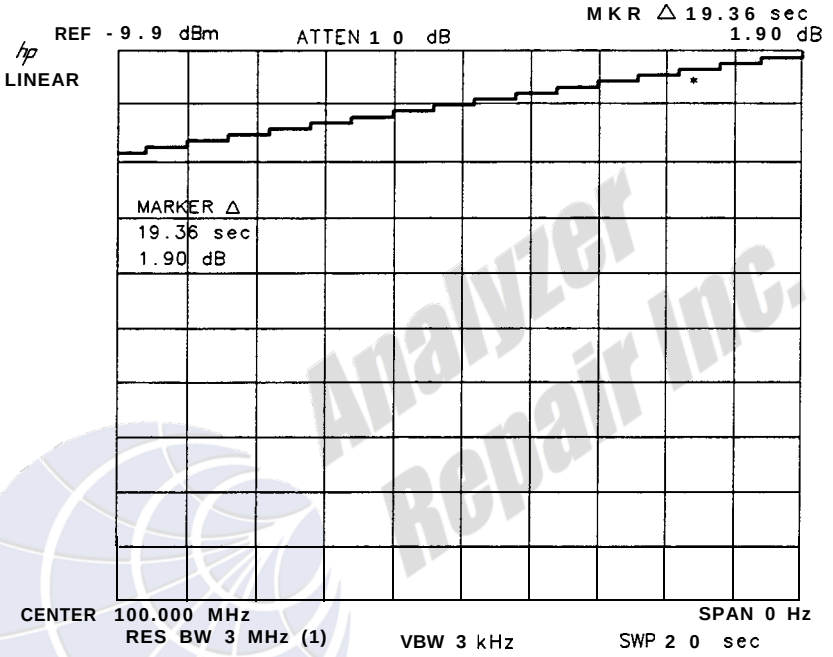

Note

Center Frequency readout will be 20.000 000 MHz for an HP 8568B/HP 85678.

Figure 1. 0.1 dB Step Gain Display

The absolute step amplitudes can be determined with the MARKER A function. The reference steps are 0.0 dB and 0.9 dB. In the Linear mode the error should be less than ±0.12 dB.

The 1 dB, 1.4 dB, and 1.8 dB steps are controlled by factory selected resistors. If one of these steps is in error by more than ± 0.12 dB in the Linear mode, refer to the adjustment section of the Performance Tests and Adjustments Manual for the procedure to determine the correct value. The other steps should be f0.2 dB in the Linear mode.

Analyzer Repair Inc.

Tables 1 through 8 provide information that is useful in troubleshooting the A4A9 IF Control Assembly.

Table 1 (0.0 to -1.9 dB Control Truth Table) and Table 2 (0 to -9 dB Control Truth Table) illustrate the A4A9 IF Control control line switching for the A4A5 Step Gain variable and fixed attenuators. These tables must be used in conjunction with one another. Table 1 is the truth table for the variable attenuator control lines (A.1 dB, A.2 dB, A.4 dB, A.8 dB, and Al dB) of the Input Latches (A) function block on the A4A9 assembly. Table 2 is the truth table for the fixed attenuator control lines (A2 dB, A4 dB, and A8 dB) of the Input Latches (A) function block on the A4A9 assembly. Together these two tables can be used to determine the states for each of these control lines for reference levels in 0.1 dB steps. As the reference level changes, 0.1 dB to 9.9 dB of attenuation is added or removed from the IF signal path.

Note

When using Table 1 (0.0 to -1.9 dB Control Truth Table) and Table 2 (0 to -9 dB Control Truth Table) for troubleshooting, the reference level must be input using the front-panel keyboard. The truth tables (Tables 1 and 2) are not valid when the spectrum analyzer is using correction factors (KSX) or when the RPG knob is used to change the reference level. The fixed and variable attenuators are set differently than the truth tables show in these modes.

Table 1 shows the variable attenuator control line states for each .1 dB step of reference level between 0 dBm and -1.9 dBm. This table repeats for every 2 dB change of the spectrum analyzer's reference level. For example, in addition to this being the truth table for reference levels between 0.0 and -1.9 dBm, it is also the truth table for reference levels between -2.0 and -3.9 dBm, between -4.0 and -5.9 dBm, between -6.0 and -7.9 dBm, between -8.0 and -9.9 dBm, and so forth.

Table 2 shows the fixed attenuator control line states of reference levels between 0 dBm and -9 dBm. The fixed attenuators change the reference level in 2 dB steps. This table repeats itself with every 10 dB change of the spectrum analyzer's reference level. For example, in addition to this being the truth table for reference levels between 0 and -9 dBm, it is also the truth table for reference levels between -10 and -19 dBm, between -20 and -29 dBm, between -30 and -39 dBm, and so forth.

To determine the levels for all control lines at the outputs of the input latches, both Table 1 and Table 2 must be used. For example, if the reference level of the spectrum analyzer is 0.0 dBm (the same as -0.0 dBm), Table 1 shows that the states of control lines A.1 dB, A.8 dB, and Al dB are high. Table 2 shows that the state of control line A8 dB is high. Thus when the spectrum analyzer has a reference level of 0.0 dBm, control lines A.1 dB, A.8 dB, Al dB, and A8 dB are high at the output of the input latches (Function Block A).

As another example, if the spectrum analyzer has a reference level of -33.4 dBm, use the -2 (-3) dBm row of Table 2 because it is representative for reference levels from -30 dB through -39 dBm. Use the -1.4 dBm column of Table 1 because Table 1 is representative for reference levels between -32 dBm and -33.9 dBm. Using Tables 1 and 2, a reference level of 33.4 dBm has control lines A.1 dB, A.4 dB, A2 dB, and A4 dB high at the output of the input latches.

Table 1. 0.0 to -1.9 dB Control Truth Table (Levels at Output of Latch U20)*

Control Line	Reference Level (dBm)																			
	0.0	−0.1	−0.2	−0.3	−0.4	−0.5	−0.6	−0.7	−0.8	−0.9	−1.0	−1.1	−1.2	−1.3	−1.4	−1.5	−1.6	−1.7	−1.8	−1.9
A.1 dB	H		H		H		H		H		H		H		H		H		H	
A.2 dB			H	H			H	H					H	H			H	H		
A.4 dB			H	H	H	H							H	H	H	H				
A.8 dB	H	H									H	H								
A1 dB	H	H	H	H	H	H	H	H	H	H										

* Latch U11 on early versions of A4A9 IF Control

Table 2. 0 to -9 dB Control Truth Table (Levels at Output of Latches U18 and U20)*

Reference Level (dBm)	A2 dB	A4 dB	A8 dB
0 (−1)			H
−2 (−3)	H	H	
−4 (−5)		H	
−6 (−7)	H		
−8 (−9)			

* Latches U10 and U11 on early versions of A4A9 IF Control

Table 3. Resolution Bandwidth Truth Table

Resolution Bandwidth	RBW D	RBW C	RBW B	RBW A
3 MHz	H	H	H	H
1 MHz	H	H	H	
300 kHz	H	H		H
100 kHz	H	H		
30 kHz	H		H	H
10 kHz	H		H	
3 kHz	H			H
1 kHz		H	H	
300 Hz		H		H
100 Hz		H		
30 Hz			H	H
10 Hz			H	

Analyzer Repair Inc.

Table 4. Video Bandwidth Truth Table

Video Bandwidth	VBW D	VBW C	VBW B	VBW A
3 MHz	H	H	H	H
1 MHz	H	H	H	
300 kHz	H	H		H
100 kHz	H	H		
30 kHz	H		H	H
10 kHz	H		H	
3 kHz	H			H
1 kHz		H	H	
300 Hz		H		H
100 Hz		H		
30 Hz			H	H
10 Hz			H	
3 Hz				H
1 Hz				

Analyzer Repair Inc.

Table 5. 10 dB Gain Step Truth Table (Levels at Output of Latches U10 and U17)*

Reference Level Res BW ≥3 kHz	dBm			-10	-20	-30	-40	-50	-60	-70	-80	-90	-100	-110
Reference Level Res BW ≤1 kHz	dBm	−10	−20	−30	−40	−50	−60	−70	−80	−90	−100	-110	−120	−130
A10 dB	Log		H											
	Lin		H											
A20 dB	Log	H												
	Lin	H												
SG10	Log				H		H		H	H	H	H	H	H
	Lin				H		H		H	H	H	H		
SG20-1	Log					H	H	H	H	H	H	H	H	H
	Lin					H	H	H	H	H	H	H		
SG20-2	Log							H	H	H	H	H	H	H
	Lin							H	H	H	H	H		
OS10	Log									H		H		H
	Lin													
OS20-1	Log										H	H	H	H
	Lin													
OS20-2	Log												H	H
	Lin													
LG10	Log													
	Lin									H		H		
LG20	Log													
	Lin										H	H		

Input attenuation setting at 0 dB; shift attenuator (for extended ranges).

* Latches U8 and U9 on early version of A4A9 IF Control.

Analyzer Repair Inc.

Table 6. Bandwidth Control Lines
(All Voltages Approximate)

Resolution Bandwidth	Control Links								
	BW 5	BW 63	BW 68	BW 7	Switch	300 Hz	100 Hz	30 Hz	10 Hz
3 MHz	+14.8 V	−14.0 V	−14.0 V	+9.7 V	+14.7 V	<−10 V	<−10 V	<−10 V	<−10 V
1 MHz	+14.8 V	−14.0 V	−14.0 V	+13.1 V	+14.7 V	<−10 V	<−10 V	<−10 V	<−10 V
300 kHz	+14.8 V	−14.0 V	−14.0 V	+14.1 V	+14.7 V	<−10 V	<−10 V	<−10 V	<−10 V
100 kHz	+14.8 V	−14.0 V	−14.0 V	+14.5 V	+14.7 V	<−10 V	<−10 V	<−10 V	<−10 V
30 kHz	−0.6 V	+14.3 V	+14.3 V	+14.3 V	+14.7 V	<−10 V	<−10 V	<−10 V	<−10 V
10 kHz	−0.6 V	+9.3 V	+9.3 V	+14.3 V	+14.7 V	<−10 V	<−10 V	<−10 V	<−10 V
3 kHz	−0.6 V	+9.0 V	+9.0 V	+14.3 V	+14.7 V	<−10 V	<−10 V	<−10 V	<−10 V
1 kHz	−0.6 V	+14.3 V	+9.2 V	+14.3 V	+0.0 V	<−10 V	<−10 V	<−10 V	<−10 V
300 Hz	−0.6 V	+14.3 V	+9.2 V	+14.3 V	+0.0 V	>4 V	<−10 V	<−10 V	<−10 V
100 Hz	−0.6 V	+14.3 V	+9.2 V	+14.3 V	+0.0 V	<−10 V	>4 V	<−10 V	<−10 V
30 Hz	−0.6 V	+14.3 V	+9.2 V	+14.3 V	+0.0 V	<−10 V	<−10 V	>4 V	<−10 V
10 Hz	−0.6 V	+14.3 V	+9.2 V	+14.3 V	+0.0 V	<−10 V	<−10 V	>4 V	>4 V

Table 7. Address Line Truth Table

Address	ADR 4 (16)	ADR 3 (8)	ADR 2 (4)	ADR 1 (2)	ADR 0 (1)
Address 20	H	L	H	L	L
Address 21	H	L	H	L	H

Table 8. Log Expand Truth Table

dB/DIV	B Log	A Log
10		
5		H
2	H	
1	H	H

HP Part Number 85662-60147

A4A9 IF Control

Reference Designatio	HP Part Number	C D	Qty	Description	Mfr Code	Mfr Part Number
A4A9	85662-60147		1	BOARD ASSEMBLY, IF CONTROL (SERIAL PREFIXES: 2403A-2810A)	2848(	85662-60147
A4A9C1	0180-0197		1	CAPACITOR-FXO 2.2UF+-10% 20VDC TA	56289	150D225X9020A2-DYS
A4A9C2	0180-0197		1	CAPACITOR-FXO 2.2UF+-10% 20VDC TA	56289	150D225X9020A2-DYS
A4A9C3	0180-0197	8	1	CAPACITOR-FXO 2.2UF+-10% 20VDC TA	56285	150D225X9020A2-DYS
A4A9C4	0180-0197	8	1	CAPACITOR-FXD 2.2UF+-10% 20VDC TA	56288	150D225X9020A2-DYS
A4A9C6	0160-4832	4	1	CAPACITOR-FXD .01UF +-10% 100VDC CER	04222	SA101C103KAAH
A4A9C7	0160-3878	6	1	CAP-FXD 1000pF 100 V	04222	SR201C102MAAH
A4A9C8	0160-3878	6	1	CAP-FXD 1000pF 100 V	04222	SR201C102MAAH
A4A9C9	0160-3878	6	1	CAP-FXD 1000pF 100 V	04222	SR201C102MAAH
A4A9C10	0160-3878	6	1	CAP-FXD 1000pF 100 V	04222	SR201C102MAAH
A4A9C11	0160-4832	4	1	CAPACITOR-FXD .01UF +-10% 100VDC CER	04222	SA101C103KAAH
A4A9C12	0160-4832	4	1	CAPACITOR-FXD .01UF +-10% 100VDC CER	04222	SA101C103KAAH
A4A9C13	0160-4832	4	1	CAPACITOR-FXD .01UF +-10% 100VDC CER	04222	SA101C103KAAH
A4A9C14	0160-4832	4	1	CAPACITOR-FXD .01UF +-10% 100VDC CER	04222	SA101C103KAAH
A4A9C15	0160-4832	4	1	CAPACITOR-FXD .01UF +-10% 100VDC CER	04222	SA101C103KAAH
A4A9C16	0160-4832	4	1	CAPACITOR-FXD .01UF +-10% 100VDC CER	04222	SA101C103KAAH
A4A9C17	0160-4832	4	1	ZAPACITOR-FXD .01UF +-10% 100VDC CER	04222	SA101C103KAAH
A4A9C18	0160-4832	4	1	ZAPACITOR-FXD .01UF +-10% 100VDC CER	04222	SA101C103KAAH
A4A9C19	1160-4832	4	1	ZAPACITOR-FXD .01UF +-10% 100VDC CER	04222	SA101C103KAAH
A4A9C20	1160-4832	4	1	CAPACITOR-FXD .01UF +-10% 100VDC CER	04222	SA101C103KAAH
A4A9C21	1160-4832	4	1	CAPACITOR-FXD .01UF +-10% 100VDC CER	04222	SA101C103KAAH
A4A9C22	0160-4832	4	1	CAPACITOR-FXD .01UF +-10% 100VDC CER	04222	SA101C103KAAH
A4A9C23	1160-4832	4	1	CAPACITOR-FXD .01UF +-10% 100VDC CER	04222	SA101C103KAAH
A4A9C24	0160-4832	4	1	CAPACITOR-FXD .01UF +-10% 100VDC CER	04222	SA101C103KAAH
A4A9CR1	1901-0040	1	1	DIODE-SWITCHING 30V 50MA 2NS DO-35	71468	
A4A9CR2	1901-0040	1	1	DIODE-SWITCHING 30V 50MA 2NS DO-35	71468	
A4A9CR4	1901-0050	3	1	DIODE-SWITCHING BOV 200MA 2NS DO-35	9N171	1N4150
A4A9CR5	1901-0050	3	1	DIODE-SWITCHING 80V 200MA 2NS DO-35	9N171	1N4150
A4A9CR6	1901-0040	1	1	DIODE-SWITCHING 30V 50MA 2NS DO-35	71468	
A4A9CR7	1901-0040	1	1	DIODE-SWITCHING 30V 50MA 2NS DO-35	71468	
A4A9CR8	1901-0050	3	1	DIODE-SWITCHING 80V 200MA 2NS DO-35	9N171	1N4150
A4A9CR9	1901-0050	3	1	DIODE-SWITCHING BOV 200MA 2NS DO-35	9N171	1N4150
A4A9CR10	1901-0050	3	1	DIODE-SWITCHING 80V 200MA 2NS DO-35	9N171	1N4150
A4A9CR11	1901-0040	1	1	DIODE-SWITCHING 30V 50MA 2NS DO-35	71468	
A4A9CR12	901-0040	1	1	DIODE-SWITCHING 30V 50MA 2NS DO-35	71468	
A4A9CR13	901-0040	1	1	DIODE-SWITCHING 30V 50MA 2NS DO-35	71468	
A4A9CR14	901-0040	1	1	DIODE-SWITCHING 30V 50MA 2NS DO-35	71468	
A4A9CR15	901-0040	1	1	DIODE-SWITCHING 30V 50MA 2NS DO-35	71468	
A4A9CR16	910-0016	0	1	DIODE-GE 60V 60MA 1US DO-7		
A4A9CR17	910-0016	0	1	DIODE-GE 60V 60MA 1US DO-7		
A4A9CR18	901-0040	1	1	DIODE-SWITCHING 30V 50MA 2NS DO-35	71468	
A4A9CR19	901-0040	1	1	DIODE-SWITCHING 30V 50MA 2NS DO-35	71468	
A4A9CR20	901-0040	1	1	DIODE-SWITCHING 30V 50MA 2NS DO-35	71468	
A4A9CR21	901-0050	3	1	DIODE-SWITCHING 80V 200MA 2NS DO-35	9N171	1N4150
A4A9L1	100-1618	1	1	INDUCTOR RF-CH-MLD 5.6UH +-10% .166D-INX	99800	1537-30
A4A9Q1	854-0477	7	1	TRANSISTOR NPN 2N2222A SI TO-18 PD=500MW	04713	2N2222A

**Indicates factory-selected value*

HP Part Number 85662-60147

A4A9 IF Control

Reference Designatior	HP Part Number	C D	Qty	Description	Mfr Code	Mfr Part Number
A4A9Q2	1853-0281		1	TRANSISTOR PNP 2N2907A SI TO-18 PD=400M	0471:	2N2907A
A4A9Q3	1853-0281		1	TRANSISTOR PNP 2N2907A SI TO-18 PD=400M	0471:	2N2907A
A4A9Q6	1854-0404		1	TRANSISTOR NPN SI TO-18 PD=360MW	0471:	
A4A9Q8	1854-0404		1	TRANSISTOR NPN SI TO-18 PD=360MW	0471:	
A4A9Q9	1854-0404		1	TRANSISTOR NPN SI TO-18 PD=360MW	0471:	
A4A9Q10	1854-0404		1	TRANSISTOR NPN SI TO-18 PD=360MW	0471:	
A4A9Q20	1853-0281		1	TRANSISTOR PNP 2N2907A SI TO-18 PD=400M	0471:	2N2907A
A4A9Q21	1853-0281		1	TRANSISTOR PNP 2N2907A SI TO-18 PD=400M	0471:	2N2907A
A4A9Q25	1853-0281		1	TRANSISTOR PNP 2N2907A SI TO-18 PD=400M	04713	2N2907A
A4A9Q26	1853-0281		1	TRANSISTOR PNP 2N2907A SI TO-18 PD=400M	04713	2N2907A
A4A9Q27	1853-0281		1	TRANSISTOR PNP 2N2907A SI TO-18 PD=400M	04713	2N2907A
A4A9Q28	1853-0281		1	TRANSISTOR PNP 2N2907A SI TO-18 PD=400M	04713	2N2907A
A4A9Q29	1853-0281		1	TRANSISTOR PNP 2N2907A SI TO-18 PD=400M	04713	2N2907A
A4A9R1	0757-0442		1	RESISTOR 10K +-1% .125W TF TC=0+-100	19701	SFR25H
A4A9R2	0757-0442		1	RESISTOR 10K +-1% .125W TF TC=0+-100	19701	SFR25H
A4A9R4	0757-0442		1	RESISTOR 10K +-1% .125W TF TC=0+-100	19701	SFR25H
A4A9R5	0757-0442		1	RESISTOR 10K +-1% .125W TF TC=0+-100	19701	SFR25H
A4A9R7	3757-0442		1	RESISTOR 10K +-1% .125W TF TC=0+-100	19701	SFR25H
A4A9R10	0698-0085		1	RESISTOR 2.61K 1% .125W TF TC=0+-100	19701	SFR25H
A4A9R11	3698-0085		1	RESISTOR 2.61K 1% .125W TF TC=0+-100	19701	SFR25H
A4A9R12	1757-0442		1	RESISTOR 10K +-1% .125W TF TC=0+-100	19701	SFR25H
A4A9R13	0757-0280		1	RESISTOR 1K +-1% .125W TF TC=0+-100	19701	SFR25H
A4A9R14	0757-0442		1	RESISTOR 10K +-1% .125W TF TC=0+-100	19701	SFR25H
A4A9R15	0757-0442		1	RESISTOR 10K +-1% .125W TF TC=0+-100	19701	SFR25H
A4A9R16	0757-0317		1	RESISTOR 1.33K +-1% .125W TF TC=0+-100	19701	SFR25H
A4A9R17	0757-0442		1	RESISTOR 10K +-1% .125W TF TC=0+-100	19701	SFR25H
A4A9R18	0757-0442		1	RESISTOR 10K +-1% .125W TF TC=0+-100	19701	SFR25H
A4A9R19	0757-0442		1	RESISTOR 10K +-1% .125W TF TC=0+-100	19701	SFR25H
A4A9R20	0757-0442		1	RESISTOR 10K +-1% .125W TF TC=0+-100	19701	SFR25H
A4A9R21	0757-0442		1	RESISTOR 10K +-1% .125W TF TC=0+-100	19701	SFR25H
A4A9R22	0698-3158		1	RESISTOR 23.71: 1% .125W TF TC=0+-100	19701	SFR25H
A4A9R23	0757-0463		1	RESISTOR 82.5K +-1% .125W TF TC=0+-100	19701	SFR25H
A4A9R24	1757-0447		1	RESISTOR 16.2K +-1% .125W TF TC=0+-100	19701	SFR25H
A4A9R25	0698-3161		1	LESISTOR 38.31: 1% .125W TF TC=0+-100	19701	SFR25H
A4A9R26	0698-3160		1	RESISTOR 31.6K 1% .125W TF TC=0+-100	19701	SFR25H
A4A9R27	0757-0442		1	RESISTOR 10K +-1% .125W TF TC=0+-100	19701	SFR25H
A4A9R28	1757-0458		1	LESISTOR 51.1K +-1% .125W TF TC=0+-100	19701	SFR25H
A4A9R29	1757-0420		1	LESISTOR 750 +-1% .125W TF TC=0+-100	19701	SFR25H
A4A9R30	0757-0438		1	LESISTOR 5.11K +-1% .125W TF TC=0+-100	19701	SFR25H
A4A9R33	0757-0438		1	RESISTOR 5.11K +-1% .125W TF TC=0+-100	19701	SFR25H
A4A9R34	0757-0438		1	RESISTOR 5.11K +-1% .125W TF TC=0+-100	19701	SFR25H
A4A9R35	0757-0438		1	RESISTOR 5.11K +-1% .125W TF TC=0+-100	19701	SFR25H
A4A9R36	0757-0438		1	RESISTOR 5.11K +-1% .125W TF TC=0+-100	19701	SFR25H
A4A9R40	757-0444		1	RESISTOR 12.1K +-1% .125W TF TC=0+-100	19701	SFR25H
A4A9R41	698-3459		1	RESISTOR 383K 1% .125W TF TC=0+-100	19701	SFR25H
A4A9R42	698-3243		1	RESISTOR 178K 1% .125W TF TC=0+-100	19701	SFR25H
A4A9R43	698-0085		1	RESISTOR 2.61K 1% .125W TF TC=0+-100	19701	SFR25H
A4A9R44	757-0428		1	RESISTOR 1.62K +-1% .125W TF TC=0+-100	19701	SFR25H

**Indicates factory-selected value*

HP Part Number 85662060147

A4A9 IF Control

Reference Designation	HP Part Number	CD	Qty	Description	Mfr Code	Mfr Part Number
A4A9R45	0757-0280	3	1	RESISTOR 1K +-1% .125W TF TC=0+-100	19701	SFR25H
A4A9R46	0757-0419	a	1	RESISTOR 681 +-1% .125W TF TC=0+-100	19701	SFR25H
A4A9R47	0757-0438	3	1	RESISTOR 5.11K +-1% .125W TF TC=0+-100	19701	SFR25H
A4A9R48	0698-0083	8	1	RESISTOR 1.96K 1% .125W TF TC=0+-100	19701	SFR25H
A4A9R49	0698-3260	9	1	RESISTOR 464K 1% .125W TF TC=0+-100	19701	SFR25H
A4A9R50	0698-3260	9	1	RESISTOR 464K 1% .125W TF TC=0+-100	19701	SFR25H
A4A9R51	0757-1094	9	1	RESISTOR 1.47K +-1% .125W TF TC=0+-100	19701	SFR25H
A4A9R52	0698-3150	6	1	RESISTOR 2.371: 1% .125W TF TC=0+-100	19701	SFR25H
A4A9R53	0698-3158	4	1	RESISTOR 23.71: 1% .125W TF TC=0+-100	19701	SFR25H
A4A9R54	0698-3260	9	1	RESISTOR 464K 1% .125W TF TC=0+-100	19701	SFR25H
A4A9R55	0757-0442	9	1	RESISTOR 10K +-1% .125W TF TC=0+-100	19701	SFR25H
A4A9R56	0757-0279	0	1	RESISTOR 3.16K +-1% .125W TF TC=0+-100	19701	SFR25H
A4A9R57	0698-3153	9	1	RESISTOR 3.83K 1% .125W TF TC=0+-100	19701	SFR25H
A4A9R59	0698-0085	0	1	RESISTOR 2.61K 1% .125W TF TC=0+-100	19701	SFR25H
A4A9R60	2100-3109	2	1	RESISTOR-TRMR 2K 10% TKF SIDE-ADJ 17-TRN	73138	89PR2K
A4A9R61	2100-3103	6	1	RESISTOR-TRMR 10K 10% TKF SIDE-ADJ 17-TR	73138	89PR10K
A4A9R62	2100-3054	6	1	RESISTOR-TRMR 50K 10% TKF SIDE-ADJ 17-TR	73138	89PR50K
A4A9R63	0757-0419	0	1	RESISTOR 681 +-1% .125W TF TC=0+-100	19701	SFR25H
A4A9R64	0757-0438	3	1	RESISTOR 5.11K +-1% .125W TF TC=0+-100	19701	SFR25H
A4A9R65	2100-3094	4	1	RESISTOR-TRMR 100K 10% TKF SIDE-ADJ 17-T	73138	89PR100K
A4A9R66	2100-3161	6	1	RESISTOR-TRMR 20K 10% TKF SIDE-ADJ 17-TR	73138	89PR20K
A4A9R67	0757-0465	6	1	RESISTOR 100K +-1% .125W TF TC=0+-100	19701	SFR25H
A4A9R68	0757-0279	D	1	RESISTOR 3.16K +-1% .125W TF TC=0+-100	19701	SFR25H
A4A9R69*	0698-3451	D	1	RESISTOR 133K 1% .125W TF TC=0+-100	19701	SFR25H
A4A9R70*	0698-3260	3	1	RESISTOR 464K 1% .125W TF TC=0+-100	19701	SFR25H
A4A9R71*	0698-3266	5	1	RESISTOR 237K 1% .125W TF TC=0+-100	19701	SFR25H
A4A9TP1	1251-0600	D	1	CONNECTOR-SGL CDNT PIN 1.14-MM-BSC-SZ SQ	27264	16-06-0034
A4A9TP2	1251-0600	3	1	CONNECTOR-SGL CONT PIN 1.14-MM-BSC-SZ SQ	27264	16-06-0034
A4A9U1	5081-8117	3	1	SCREENED 1826-0092 IC 1458 MZ OP AMP	28480	5081-8117
A4A9U2	1820-1418	7	1	IC DCDR TTL LS BCD-TO-DEC 4-TO-10-LINE 4	01295	SN74LS42N
A4A9U3	1820-1195	7	1	IC FF TTL LS D-TYPE POS-EDGE-TRIG COM CL	01295	SN74LS175N
A4A9U4	1820-1418	7	1	IC DCDR TTL LS BCD-TO-DEC 4-TO-10-LINE 4	01295	SN74LS42N
A4A9U6	1820-1196	3	1	IC FF TTL LS D-TYPE POS-EDGE-TRIG COM CL	01295	SN74LS174N
A4A9U7	1820-1216	3	1	IC DCDR TTL LS 3-TO-B-LINE 3-INP	01295	SN74LS138N
A4A9U8	1820-1196	3	1	IC FF TTL LS D-TYPE POS-EDGE-TRIG COM CL	01295	SN74LS174N
A4A9U9	1820-1196	3	1	IC FF TTL LS D-TYPE POS-EDGE-TRIG COM CL	01295	SN74LS174N
A4A9U10	1820-1196	3	1	IC FF TTL LS D-TYPE POS-EDGE-TRIG COM CL	01295	SN74LS174N
A4A9U11	1820-1196	3	1	IC FF TTL LS D-TYPE POS-EDGE-TRIG COM CL	01295	SN74LS174N
A4A9U12	1820-1418	7	1	IC DCDR TTL LS BCD-TO-DEC 4-TO-10-LINE 4	01295	SN74LS42N
A4A9U13	1820-0668	7	1	IC BFR TTL NON-INV HEX I-INP	01295	SN7407N
A4A9U14	1820-0471	D	1	IC INV TTL HEX I-INP	01295	SN7406N
A4A9U15	1820-0471	D	1	IC INV TTL HEX I-INP	01295	SN7406N
A4A9U16	1820-0471	D	1	IC INV TTL HEX I-INP	01295	SN7406N
A4A9VR1	1902-0041	1	1	DIODE-ZNR 5.11V 5% DO-35 PD=.4W	04713	
A4A9VR2	1902-3203	5	1	DIODE-ZNR 14.7V 5% DO-35 PD=.4W	04713	

**Indicates factory-selected value*

HP Part Number 85662-60202

A4A9 IF Control

Reference Designatior	HP Part Number	C. D	Qty	Description	Mfr Code	Mfr Part Number
A4A9	85662-60202	4	1	BOARD ASSEMBLY, IF CONTROL (SERIAL PREFIXES: 2813A-2816A)	2848	85662-60202
A4A9C1	0160-4832	4	1	CAPACITOR-FXD .01UF +-10% 100VDC CER	0422;	SA101C103KAAH
A4A9C3	0160-4832	4	1	CAPACITOR-FXD .01UF +-10% 100VDC CER	0422;	SA101C103KAAH
A4A9C4	0160-4832	4	1	CAPACITOR-FXO .01UF +-10% 100VDC CER	0422;	SA101C103KAAH
A4A9C5	0160-4832	1	1	CAPACITOR-FXD .01UF +-10% 100VDC CER	0422;	SA101C103KAAH
A4A9C6	0160-4832	1	1	CAPACITOR-FXD .01UF +-10% 100VDC CER	0422;	SA101C103KAAH
A4A9C7	0160-4832	4	1	CAPACITOR-FXD .01UF +-10% 100VDC CER	0422;	SA101C103KAAH
A4A9C8	0160-4832	4	1	CAPACITOR-FXD .01UF +-10% 100VDC CER	0422;	SA101C103KAAH
A4A9C9	0160-4832	4	1	CAPACITOR-FXD .01UF +-10% 100VDC CER	04221	SA101C103KAAH
A4A9C10	0160-4832	4	1	CAPACITOR-FXD .01UF +-10% 100VDC CER	0422;	SA101C103KAAH
A4A9C11	0160-4832	4	1	CAPACITOR-FXD .01UF +-10% 100VDC CER	0422;	SA101C103KAAH
A4A9C12	0160-4832	4	1	CAPACITOR-FXD .01UF +-10% 100VDC CER	0422;	SA101C103KAAH
A4A9C13	0160-4832	4	1	CAPACITOR-FXD .01UF +-10% 100VDC CER	0422;	SA101C103KAAH
A4A9C14	0160-4832	4	1	CAPACITOR-FXD .01UF +-10% 100VDC CER	0422;	SA101C103KAAH
A4A9C15	0160-4822	2	1	CAPACITOR-FXD 1000PF +-5% 100VDC CER 0+-	04222	SA201A102JAAH
A4A9C16	0160-4822	2	1	ZAPACITOR-FXD 1000PF +-5% 100VDC CER 0+-	04222	SA201A102JAAH
A4A9C17	3160-4822	2	1	CAPACITOR-FXD 1000PF +-5% 100VDC CER 0+-	04222	SA201A102JAAH
A4A9C18	3160-4822	2	1	CAPACITOR-FXD 1000PF +-5% 100VDC CER 0+-	04222	SA201A102JAAH
A4A9C19	0160-4832	4	1	CAPACITOR-FXD .01UF +-10% 100VDC CER	04222	SA101C103KAAH
A4A9C20	0180-0197	8	1	CAPACITOR-FXD 2.2UF+-10% 20VDC TA	56289	150D225X9020A2-DYS
A4A9C21	0180-0197	8	1	CAPACITOR-FXD 2.2UF+-10% 20VDC TA	56289	150D225X9020A2-DYS
A4A9C22	1180-0197	8	1	CAPACITOR-FXD 2.2UF+-10% 20VDC TA	56289	150D225X9020A2-DYS
A4A9CR1	1901-0050	3	1	DIODE-SWITCHING 80V 200MA 2NS DO-35	9N171	1N4150
A4A9CR2	1901-0050	3	1	DIODE-SWITCHING 80V 200MA 2NS DO-35	9N171	1N4150
A4A9CR3	1901-0050	3	1	DIODE-SWITCHING 80V 200MA 2NS DO-35	9N171	1N4150
A4A9CR4	1901-0050	3	1	DIODE-SWITCHING 80V 200MA 2NS DO-35	9N171	1N4150
A4A9CR5	1901-0050	3	1	DIODE-SWITCHING 80V 200MA 2NS DO-35	9N171	1N4150
A4A9CR6	1901-0050	3	1	DIODE-SWITCHING 80V 200MA 2NS DO-35	9N171	1N4150
A4A9CR7	1901-0050	3	1	DIODE-SWITCHING 80V 200MA 2NS DO-35	9N171	1N4150
A4A9CR8	1901-0050	3	1	DIODE-SWITCHING 80V 200MA 2NS DO-35	9N171	1N4150
A4A9CR9	1901-0050	3	1	DIODE-SWITCHING 80V 200MA 2NS DO-35	9N171	1N4150
A4A9CR10	1901-0050	3	1	DIODE-SWITCHING 80V 200MA 2NS DO-35	9N171	1N4150
A4A9CR11	1901-0050	3	1	DIODE-SWITCHING 80V 200MA 2NS DO-35	9N171	1N4150
A4A9CR12	1901-0050	3	1	DIODE-SWITCHING 80V 200MA 2NS DO-35	9N171	1N4150
A4A9CR13	1901-0050	3	1	DIODE-SWITCHING 80V 200MA 2NS DO-35	9N171	1N4150
A4A9CR14	1901-0050	3	1	DIODE-SWITCHING 80V 200MA 2NS DO-35	9N171	1N4150
A4A9CR15	901-0050	3	1	DIODE-SWITCHING 80V 200MA 2NS DO-35	9N171	1N4150
A4A9CR16	901-0050	3	1	DIODE-SWITCHING 80V 200MA 2NS DO-35	9N171	1N4150
A4A9CR17	901-0050	3	1	DIODE-SWITCHING 80V 200MA 2NS DO-35	9N171	1N4150
A4A9CR18	901-0050	3	1	DIODE-SWITCHING 80V 200MA 2NS DO-35	9N171	1N4150
A4A9CR19	901-0050	3	1	DIODE-SWITCHING 80V 200MA 2NS DO-35	9N171	1N4150
A4A9CR20	901-0050	3	1	DIODE-SWITCHING 80V 200MA 2NS DO-35	9N171	1N4150
A4A9CR21	901-0050	3	1	DIODE-SWITCHING 80V 200MA 2NS DO-35	9N171	1N4150
A4A9CR22	901-0050	3	1	DIODE-SWITCHING 80V 200MA 2NS DO-35	9N171	1N4150
A4A9CR23	901-0050	3	1	DIODE-SWITCHING 80V 200MA 2NS DO-35	9N171	1N4150
A4A9CR24	901-0050	3	1	DIODE-SWITCHING 80V 200MA 2NS DO-35	9N171	1N4150

**Indicates factory-selected value*

HP Part Number 85662-60202

A4A9 IF Control

Reference Designation	HP Part Number	C. D	Qty	Description	Mfr Code	Mfr Part Number
A4A9CR25	1901-0050	3	1	DIODE-SWITCHING 80V 200MA 2NS DO-35	9N171	1N4150
A4A9CR26	1901-0050	3	1	DIODE-SWITCHING 80V 200MA 2NS DO-35	9N171	1N4150
A4A9CR27	1901-0050	3	1	DIODE-SWITCHING 80V 200MA 2NS DO-35	9N171	1N4150
A4A9CR28	1901-0050	3	1	DIODE-SWITCHING 80V 200MA 2NS DO-35	9N171	1N4150
A4A9CR29	1901-0050	3	1	DIODE-SWITCHING 80V 200MA 2NS DO-35	9N171	1N4150
A4A9CR30	1901-0050	-	1	DIODE-SWITCHING 80V 200MA 2NS DO-35	9N171	1N4150
A4A9R2*	0698-3155	1	1	RESISTOR 4.64K 1% .125W TF TC=0+-100	19701	SFR25H
A4A9R3*	0757-0442	9	1	RESISTOR 10K +-1% .125W TF TC=0+-100	19701	SFR25H
A4A9R6*	0757-0465	6	1	RESISTOR 100K +-1% .125W TF TC=0+-100	19701	SFR25H
A4A9R7*	3698-3451	C	1	RESISTOR 133K 1% .125W TF TC=0+-100	19701	SFR25H
A4A9R10*	3698-3136	8	1	RESISTOR 17.8K 1% .125W TF TC=0+-100	19701	SFR25H
A4A9R11*	3698-0083	8	1	RESISTOR 1.96K 1% .125W TF TC=0+-100	19701	SFR25H
A4A9R14	)757-0442	9	1	RESISTOR 10K +-1% .125W TF TC=0+-100	19701	SFR25H
A4A9R15	3698-0082	7	1	RESISTOR 464 1% .125W TF TC=0+-100	19701	SFR25H
A4A9R16	1757-0424	7	1	RESISTOR 1.1K +-1% .125W TF TC=0+-100	19701	SFR25H
A4A9R17	)757-0442	9	1	RESISTOR 10K +-1% .125W TF TC=0+-100	19701	SFR25H
A4A9R18	1757-0317	7	1	RESISTOR 1.33K +-1% .125W TF TC=0+-100	19701	SFR25H
A4A9R19	)757-0442	9	1	RESISTOR 10K +-1% .125W TF TC=0+-100	19701	SFR25H
A4A9R23	)757-0419	0	1	RESISTOR 681 +-1% .125W TF TC=0+-100	19701	SFR25H
A4A9R24	)757-0280	3	1	RESISTOR 1K +-1% .125W TF TC=0+-100	19701	SFR25H
A4A9R25	)757-0438	3	1	RESISTOR 5.11K +-1% .125W TF TC=0+-100	19701	SFR25H
A4A9R26	)757-0428	1	1	RESISTOR 1.62K +-1% .125W TF TC=0+-100	19701	SFR25H
A4A9R29	)698-0085	0	1	RESISTOR 2.61K 1% .125W TF TC=0+-100	19701	SFR25H
A4A9R30	)757-0458	7	1	RESISTOR 51.1K +-1% .125W TF TC=0+-100	19701	SFR25H
A4A9R32	)757-0289	2	1	RESISTOR 13.3K +-1% .125W TF TC=0+-100	19701	SFR25H
A4A9R33	)698-3156	2	1	RESISTOR 14.7K 1% .125W TF TC=0+-100	19701	SFR25H
A4A9R34	)698-3437	2	1	RESISTOR 133 1% .125W TF TC=0+-100	19701	SFR25H
A4A9R35	)757-0289	2	1	RESISTOR 13.3K +-1% .125W TF TC=0+-100	19701	SFR25H
A4A9R36	)698-3156	2	1	RESISTOR 14.7K 1% .125W TF TC=0+-100	19701	SFR25H
A4A9R37	)698-3437	2	1	RESISTOR 133 1% .125W TF TC=0+-100	19701	SFR25H
A4A9R38	1757-0442	9	1	RESISTOR 10K +-1% .125W TF TC=0+-100	19701	SFR25H
A4A9R39	)757-0442	9	1	RESISTOR 10K +-1% .125W TF TC=0+-100	19701	SFR25H
A4A9R40	)698-0085	D	1	RESISTOR 2.61K 1% .125W TF TC=0+-100	19701	SFR25H
A4A9R41	)757-0438	3	1	RESISTOR 5.11K +-1% .125W TF TC=0+-100	19701	SFR25H
A4A9R42	)757-0444	1	1	RESISTOR 12.1K +-1% .125W TF TC=0+-100	19701	SFR25H
A4A9R43	1698-0084	3	1	RESISTOR 2.15K 1% .125W TF TC=0+-100	19701	SFR25H
A4A9R44	)698-0084	3	1	RESISTOR 2.15K 1% .125W TF TC=0+-100	19701	SFR25H
A4A9R45	1698-3450	3	1	RESISTOR 42.21: 1% .125W TF TC=0+-100	19701	SFR25H
A4A9R46*	)757-0466	7	1	RESISTOR 110K +-1% .125W TF TC=0+-100	19701	SFR25H
A4A9R47	1698-3457	5	1	RESISTOR 316K 1% .125W TF TC=0+-100	19701	SFR25H
A4A9R48*	1698-3458	7	1	RESISTOR 348K 1% .125W TF TC=0+-100	19701	SFR25H
A4A9R49	1698-3161	3	1	RESISTOR 38.31: 1% .125W TF TC=0+-100	19701	SFR25H
A4A9R50*	)757-0462	3	1	RESISTOR 75K +-1% .125W TF TC=0+-100	19701	SFR25H
A4A9R51	)757-0464	5	1	RESISTOR 90.9K +-1% .125W TF TC=0+-100	19701	SFR25H
A4A9R52*	698-8960	5	1	RESISTOR 750K +-1% .125W TF TC=0+-100	19701	SFR25H
A4A9R53	698-3449	5	1	RESISTOR 28.7K 1% .125W TF TC=0+-100	19701	SFR25H
A4A9R54	757-0199	3	1	RESISTOR 21.5K +-1% .125W TF TC=0+-100	19701	SFR25H
A4A9R55*	757-0460	L	1	RESISTOR 61.9K +-1% .125W TF TC=0+-100	19701	SFR25H

Indicates factory-selected value

HP Part Number 85662-60202

A4A9 IF Control

Reference Designation	HP Part Number	C D	Qty	Description	Mfr Code	Mfr Part Number
A4A9R56	0757-0460	1	1	RESISTOR 61.9K +-1% .125W TF TC=0+-100	19701	SFR25H
A4A9R57*	0698-3460	1	1	RESISTOR 422K 1% .125W TF TC=0+-100	19701	SFR25H
A4A9R58	0698-3450	9	1	RESISTOR 42.2K 1% .125W TF TC=0+-100	19701	SFR25H
A4A9R59*	0698-8824	1	1	RESISTOR 562K +-1% .125W TF TC=0+-100	19701	SFR25H
A4A9R60	2100-3103	6	1	RESISTOR-TRMR 10K 10% TKF SIDE-ADJ 17-TR	73138	89PR10K
A4A9R61	2100-3054	6	1	RESISTOR-TRMR 50K 10% TKF SIDE-ADJ 17-TR	73138	89PR50K
A4A9R62	2100-3162	7	1	RESISTOR-TRMR 200K 10% TKF SIDE-ADJ 17-T	73138	89PR200K
A4A9R63	0698-3437	2	1	RESISTOR 133 1% .125W TF TC=0+-100	19701	SFR25H
A4A9R64	0757-0289	2	1	RESISTOR 13.3K +-1% .125W TF TC=0+-100	19701	SFR25H
A4A9R65	2100-3162	7	1	RESISTOR-TRMR 200K 10% TKF SIDE-ADJ 17-T	73138	89PR200K
A4A9R66	2100-3054	6	1	RESISTOR-TRMR 50K 10% TKF SIDE-ADJ 17-TR	73138	89PR50K
A4A9R67	0698-0085	0	1	RESISTOR 2.61K 1% .125W TF TC=0+-100	19701	SFR25H
A4A9R68	0698-0085	0	1	RESISTOR 2.61K 1% .125W TF TC=0+-100	19701	SFR25H
A4A9R69	0698-3260	9	1	RESISTOR 464K 1% .125W TF TC=0+-100	19701	SFR25H
A4A9R70*	0698-8826	3	1	RESISTOR 825K +-1% .125W TF TC=0+-100	19701	SFR25H
A4A9R71	0757-0199	3	1	RESISTOR 21.5K +-1% .125W TF TC=0+-100	19701	SFR25H
A4A9R72*	0757-0467	8	1	RESISTOR 121K +-1% .125W TF TC=0+-100	19701	SFR25H
A4A9R74*	0757-0463	4	1	RESISTOR 82.51: +-1% .125W TF TC=0+-100	19701	SFR25H
A4A9R75	0698-3156	2	1	RESISTOR 14.7K 1% .125W TF TC=0+-100	19701	SFR25H
A4A9R76	0757-0465	6	1	RESISTOR 100K +-1% .125W TF TC=0+-100	19701	SFR25H
A4A9R77	0757-0442	9	1	RESISTOR 10K +-1% .125W TF TC=0+-100	19701	SFR25H
A4A9R78	0757-0280	3	1	RESISTOR 1K +-1% .125W TF TC=0+-100	19701	SFR25H
A4A9R79	0757-0280	3	1	RESISTOR 1K +-1% .125W TF TC=0+-100	19701	SFR25H
A4A9R80	0757-0280	3	1	RESISTOR 1K +-1% .125W TF TC=0+-100	19701	SFR25H
A4A9R81	0757-0280	3	1	RESISTOR 1K +-1% .125W TF TC=0+-100	19701	SFR25H
A4A9R82	0698-0084	9	1	RESISTOR 2.15K 1% .125W TF TC=0+-100	19701	SFR25H
A4A9TP1	1251-0600	0	1	CONNECTOR-SGL CONT PIN 1.14-MM-BSC-SZ SQ	27264	16-06-0034
A4A9TP2	1251-0600	0	1	CONNECTOR-SGL CONT PIN 1.14-MM-BSC-SZ SQ	27264	16-06-0034
A4A9U1	1826-0990	0	1	IC OP AMP GP DUAL 8-DIP-C PKG	04713	MC1458U
A4A9U2	1820-0468	5	1	IC DCDR TTL BCD-TO-DEC 4-TO-10-LINE 4-IN	01295	SN7445N
A4A9U3	1858-0076	0	1	TRANSISTOR ARRAY 14-PIN PLSTC TO-116	04713	MPQ2907P
A4A9U4	1858-0076	0	1	TRANSISTOR ARRAY 14-PIN PLSTC TO-116	04713	MPQ2907P
A4A9U5	1810-0277	3	1	NETWORK-RES 10-SIP 2.2K OHM X 9	91637	MSP10A01
A4A9U6	1820-0468	5	1	IC DCDR TTL BCD-TO-DEC 4-TO-10-LINE 4-IN	01295	SN7445N
A4A9U7	1820-1195	7	1	IC FF TTL LS D-TYPE POS-EDGE-TRIG COM CL	01295	SN74LS175N
A4A9U8	1858-0077	1	1	TRANSISTOR ARRAY 14-PIN PLSTC TO-116	04713	MPQ2222P
A4A9U9	1820-0471	0	1	IC INV TTL HEX 1-INP	01295	SN7406N
A4A9U10	1820-1196	8	1	IC FF TTL LS D-TYPE POS-EDGE-TRIG COM CL	01295	SN74LS174N
A4A9U11	1820-0468	5	1	IC DCDR TTL BCD-TO-DEC 4-TO-10-LINE 4-IN	01295	SN7445N
A4A9U12	1810-0280	8	1	NETWORK-RES 10-SIP 10.0K OHM X 9	91637	MSP10A01
A4A9U13	1820-1216	3	1	IC DCDR TTL LS 3-TO-8-LINE 3-INP	01295	SN74LS138N
A4A9U14	1820-1196	8	1	IC FF TTL LS D-TYPE POS-EDGE-TRIG COM CL	01295	SN74LS174N
A4A9U15	1820-0471	0	1	IC INV TTL HEX 1-INP	01295	SN7406N
A4A9U16	1858-0076	0	1	TRANSISTOR ARRAY 14-PIN PLSTC TO-116	04713	MPQ2907P
A4A9U17	1820-1196	8	1	IC FF TTL LS O-TYPE POS-EDGE-TRIG COM CL	01295	SN74LS174N
A4A9U18	1820-1196	8	1	IC FF TTL LS D-TYPE POS-EDGE-TRIG COM CL	01295	SN74LS174N
A4A9U19	1820-0471	0	1	IC INV TTL HEX 1-INP	01295	SN7406N

**Indicates factory-selected value*

HP Part Number 85662-60202

A4A9 IF Control

Reference Designatior	HP Part Number	CD	Qty	Description	Mfr Code	Mfr Part Number
A4A9U20	1820-1196	8	1	IC FF TTL LS D-TYPE POS-EDGE-TRIG COM CI	0129[illegible]	SN74LS174N
A4A9U21	1820-2024	3	1	IC DRVR TTL LS LINE DRVR OCTL	0129[illegible]	SN74LS244N
A4A9U22	1810-0280	8	1	NETWORK-RES 10-SIP 10.0K OHM X 9	91637	MSP10A01
A4A9VR1	1902-3203	6	1	DIODE-ZNR 14.7V 5% DO-35 PD=.4W	0471[illegible]	
A4A9VR2	1902-0041	4	1	DIODE-ZNR 5.11V 5% DO-35 PD=.4W	04713	
A4A9W1	8159-0005	0	1	RESISTOR-ZERO OHMS 22 AWG LEAD DIA	5521C	L-2007-1
A4A9W4	8159-0005	0	1	RESISTOR-ZERO OHMS 22 AWG LEAD DIA	5521C	L-2007-1

Analyzer Repair Inc.

**Indicates factory-selected value*

HP Part Number 85662-60222

A4A9 IF Control

Reference Designation	HP Part Number	CD	Qt	Description	Mfr Code	Mfr Part Number
A4A9	85662-60222	8	1	IF CONTROL BOARD ASSEMBLY (SERIAL PREFIX: 2848A)	28480	85662-60222
A4A9C1	0160-4832	4	1	CAPACITOR-FXD .01UF +-10% 100VDC CER	04222	SA101C103KAAH
A4A9C3	0160-4832	4	1	CAPACITOR-FXD .01UF +-10% 100VDC CER	04222	SA101C103KAAH
A4A9C4	0160-4832	4		CAPACITOR-FXD .01UF +-10% 100VDC CER	04222	SA101C103KAAH
A4A9C5	0160-4832	4	1	CAPACITOR-FXD .01UF +-10% 100VDC CER	04222	SA101C103KAAH
A4A9C6	0160-4832	4	1	CAPACITOR-FXD .01UF +-10% 100VDC CER	04222	SA101C103KAAH
A4A9C7	0160-4832	4	1	CAPACITOR-FXD .01UF +-10% 100VDC CER	04222	SA101C103KAAH
A4A9C8	0160-4832	4	1	CAPACITOR-FXD .01UF +-10% 100VDC CER	04222	SA101C103KAAH
A4A9C9	0160-4832	4	1	CAPACITOR-FXD .01UF +-10% 100VDC CER	04222	SA101C103KAAH
A4A9C10	0160-4832	4	1	CAPACITOR-FXD .01UF +-10% 100VDC CER	04222	SA101C103KAAH
A4A9C11	0160-4832	4	1	CAPACITOR-FXD .01UF +-10% 100VDC CER	04222	SA101C103KAAH
A4A9C12	0160-4832	4	1	CAPACITOR-FXD .01UF +-10% 100VDC CER	04222	SA101C103KAAH
A4A9C13	0160-4832	4	1	CAPACITOR-FXD .01UF +-10% 100VDC CER	04222	SA101C103KAAH
A4A9C14	0160-4832	4	1	CAPACITOR-FXD .01UF +-10% 100VDC CER	04222	SA101C103KAAH
A4A9C15	0160-4822	2	1	CAPACITOR-FXD 1000PF +-5% 100VDC CER 0+-	04222	SA201A102JAAH
A4A9C16	0160-4822	2	1	CAPACITOR-FXD 1000PF +-5% 100VDC CER 0+-	04222	SA201A102JAAH
A4A9C17	0160-4822	2	1	CAPACITOR-FXD 1000PF +-5% 100VDC CER 0+-	04222	SA201A102JAAH
A4A9C18	0160-4822	2	1	CAPACITOR-FXD 1000PF +-5% 100VDC CER 0+-	04222	SA201A102JAAH
A4A9C19	0160-4832	4	1	CAPACITOR-FXD .01UF +-10% 100VDC CER	04222	SA101C103KAAH
A4A9C20	0180-0197	8	1	CAPACITOR-FXD 2.2UF+-10% 20VDC TA	56289	150D225X9020A2-DYS
A4A9C21	0180-0197	8	1	CAPACITOR-FXD 2.2UF+-10% 20VDC TA	56289	150D225X9020A2-DYS
A4A9C22	0180-0197	8	1	CAPACITOR-FXD 2.2UF+-10% 20VDC TA	56289	150D225X9020A2-DYS
A4A9CR2	1901-0050	3	1	DIODE-SWITCHING 80V 200MA 2NS DO-35	9N171	1N4150
A4A9CR3	1901-0050	3	1	DIODE-SWITCHING 80V 200MA 2NS DO-35	9N171	1N4150
A4A9CR4	1901-0050	3	1	DIODE-SWITCHING 80V 200MA 2NS DO-35	9N171	1N4150
A4A9CR5	1901-0050	3	1	DIODE-SWITCHING 80V 200MA 2NS DO-35	9N171	1N4150
A4A9CR6	1901-0050	3	1	DIODE-SWITCHING 80V 200MA 2NS DO-35	9N171	1N4150
A4A9CR7	1901-0050	3	1	DIODE-SWITCHING 80V 200MA 2NS DO-35	9N171	1N4150
A4A9CR8	1901-0050	3	1	DIODE-SWITCHING 80V 200MA 2NS DO-35	9N171	1N4150
A4A9CR9	1901-0050	3	1	DIODE-SWITCHING BOV 200MA 2NS DO-35	9N171	1N4150
A4A9CR10	1901-0050	3	1	DIODE-SWITCHING 80V 200MA 2NS DO-35	9N171	1N4150
A4A9CR11	1901-0050	3		DIODE-SWITCHING 80V 200MA 2NS DO-35	9N171	1N4150
A4A9CR12	1901-0050	3	1	DIODE-SWITCHING 80V 200MA 2NS DO-35	9N171	1N4150
A4A9CR13	1901-0050	3	1	DIODE-SWITCHING 80V 200MA 2NS DO-35	9N171	1N4150
A4A9CR14	1901-0050	3	1	DIODE-SWITCHING 80V 200MA 2NS DO-35	9N171	1N4150
A4A9CR15	1901-0050	3	1	DIODE-SWITCHING 80V 200MA 2NS DO-35	9N171	1N4150
A4A9CR16	1901-0050	3	1	DIODE-SWITCHING 8DV 20DMA 2NS DO-35	9N171	1N4150
A4A9CR17	1901-0050	3	1	DIODE-SWITCHING 80V 200MA 2NS DO-35	9N171	1N4150
A4A9CR18	1901-0050	3	1	DIODE-SWITCHING 80V 200MA 2NS DO-35	9N171	1N4150
A4A9CR19	1901-0050	3	1	DIODE-SWITCHING 80V 200MA 2NS DO-35	9N171	1N4150
A4A9CR20	1901-0050	3	1	DIODE-SWITCHING 80V 200MA 2NS DO-35	9N171	1N4150
A4A9CR21	1901-0050	3		DIODE-SWITCHING 8DV 200MA 2NS DO-35	9N171	1N4150
A4A9CR22	1901-0050	3		DIODE-SWITCHING 80V 200MA 2NS DO-35	9N171	1N4150
A4A9CR23	1901-0050	3	1	DIODE-SWITCHING 8DV 200MA 2NS DO-35	9N171	1N4150
A4A9CR24	1901-0050	3	1	DIODE-SWITCHING 80V 200MA 2NS DO-35	9N171	1N4150
A4A9CR25	1901-0050	3		DIODE-SWITCHING 80V 200MA 2NS DO-35	9N171	1N4150

**Indicates factory-selected value*

HP Part Number 85662-60222

A4A9 IF Control

Reference Designatior	HP Part Number	C D	Qty	Description	Mfr Code	Mfr Part Number
A4A9CR26	1901-0050	3	1	DIODE-SWITCHING 80V 200MA 2NS DO-35	9N171	1N4150
A4A9CR27	1901-0050	3	1	DIODE-SWITCHING 80V 200MA 2NS DO-35	9N171	1N4150
A4A9CR28	1901-0050	3	1	DIODE-SWITCHING 80V 200MA 2NS DO-35	9N171	1N4150
A4A9CR29	1901-0050	3	1	DIODE-SWITCHING 80V 200MA 2NS DO-35	9N171	1N4150
A4A9CR30	1901-0050	3	1	DIODE-SWITCHING 80V 200MA 2NS DO-35	9N171	1N4150
A4A9MP1				NOT ASSIGNED		
A4A9MP2	0360-0124	3	1	CONNECTOR-SGL CONT PIN .04-IN-BSC-SZ RND	97300	
A4A9MP3	0360-0124	3	1	CONNECTOR-SGL CONT PIN .04-IN-BSC-SZ RND	97300	
A4A9MP4	0360-0124	3	1	CONNECTOR-SGL CONT PIN .04-IN-BSC-SZ RND	97300	
A4A9MP5	0360-0124	3	1	CONNECTOR-SGL CONT PIN .04-IN-BSC-SZ RND	97300	
A4A9MP6	0360-0124	3	1	CONNECTOR-SGL CONT PIN .04-IN-BSC-SZ RND	97300	
A4A9MP7	0360-0124	3	1	CONNECTOR-SGL CONT PIN .04-IN-BSC-SZ RND	97300	
A4A9MP8	0360-0124	3	1	CONNECTOR-SGL CONT PIN .04-IN-BSC-SZ RND	97300	
A4A9MP9	0360-0124	3	1	CONNECTOR-SGL CONT PIN .04-IN-BSC-SZ RND	97300	
A4A9MP10	0360-0124	3	1	CONNECTOR-SGL CONT PIN .04-IN-BSC-SZ RND	97300	
A4A9MP11	0360-0124	3	1	CONNECTOR-SGL CONT PIN .04-IN-BSC-SZ RND	97300	
A4A9R3*	0757-0441	8	1	RESISTOR 8.25K +-1% .125W TF TC=0+-100	19701	SFR25H
A4A9R6*	0698-3162	D	1	RESISTOR 46.41: 1% .125W TF TC=0+-100	19701	SFR25H
A4A9R7*	0757-0123	3	1	RESISTOR 34.8K +-1% .125W TF TC=0+-100	19701	SFR25H
A4A9R10*	0757-0440	7	1	RESISTOR 7.5K +-1% .125W TF TC=0+-100	19701	SFR25H
A4A9R11*	0698-3150	6	1	RESISTOR 2.371: 1% .125W TF TC=0+-100	19701	SFR25H
A4A9R14	0757-0442	9	1	RESISTOR 10K +-1% .125W TF TC=0+-100	19701	SFR25H
A4A9R15	0698-0082	7	1	RESISTOR 464 1% .125W TF TC=0+-100	19701	SFR25H
A4A9R16	0757-0424	7	1	RESISTOR 1.1K +-1% .125W TF TC=0+-100	19701	SFR25H
A4A9R17	0757-0442	9	1	RESISTOR 10K +-1% .125W TF TC=D+-100	19701	SFR25H
A4A9R18	0757-0317	7	1	RESISTOR 1.33K +-1% .125W TF TC=0+-100	19701	SFR25H
A4A9R19	0757-0442	9	1	RESISTOR 10K +-1% .125W TF TC=0+-100	19701	SFR25H
A4A9R23	0757-0419	0	1	RESISTOR 681 +-1% .125W TF TC=0+-100	19701	SFR25H
A4A9R24	3757-0280	3	1	RESISTOR 1K +-1% .125W TF TC=0+-100	19701	SFR25H
A4A9R25	3757-0438	3	1	RESISTOR 5.11K +-1% .125W TF TC=0+-100	19701	SFR25H
A4A9R26	3757-0428	1	1	RESISTOR 1.62K +-1% .125W TF TC=0+-100	19701	SFR25H
A4A9R29	3698-0085	3	1	RESISTOR 2.61K 1% .125W TF TC=0+-100	19701	SFR25H
A4A9R30	0757-0458	7	1	RESISTOR 51.1K +-1% .125W TF TC=0+-100	19701	SFR25H
A4A9R32	0757-0289	?	1	RESISTOR 13.3K +-1% .125W TF TC=0+-100	19701	SFR25H
A4A9R33	3698-3156	?	1	RESISTOR 14.7K 1% .125W TF TC=0+-100	19701	SFR25H
A4A9R34	1698-3437	?	1	RESISTOR 133 1% .125W TF TC=0+-100	19701	SFR25H
A4A9R35	0757-0289	?	1	RESISTOR 13.3K +-1% .125W TF TC=0+-100	19701	SFR25H
A4A9R36	1698-3156	?	1	RESISTOR 14.7K 1% .125W TF TC=0+-100	19701	SFR25H
A4A9R37	1698-3437	?	1	RESISTOR 133 1% .125W TF TC=0+-100	19701	SFR25H
A4A9R38	0757-0442	3	1	RESISTOR 10K +-1% .125W TF TC=0+-100	19701	SFR25H
A4A9R39	1757-0442	3	1	RESISTOR 10K +-1% .125W TF TC=0+-100	19701	SFR25H
A4A9R40	1698-0085	0	1	RESISTOR 2.61K 1% .125W TF TC=0+-100	19701	SFR25H
A4A9R41	1757-0438	3	1	RESISTOR 5.11K +-1% .125W TF TC=0+-100	19701	SFR25H
A4A9R42	0757-0444	L	1	RESISTOR 12.1K +-1% .125W TF TC=0+-100	19701	SFR25H
A4A9R43	0698-0084	9	1	RESISTOR 2.15K 1% .125W TF TC=0+-100	19701	SFR25H
A4A9R44	0698-0084	9	1	RESISTOR 2.15K 1% .125W TF TC=0+-100	19701	SFR25H
A4A9R45	0698-3450	9	1	RESISTOR 42.2K 1% .125W TF TC=0+-100	19701	SFR25H
A4A9R46*	0757-0466	7	1	RESISTOR 110K +-1% .125W TF TC=0+-100	19701	SFR25H

**Indicates factory-selected value*

HP Part Number 85662-60222
A4A9 IF Control

Reference Designation	HP Part Number	CD	Qty	Description	Mfr Code	Mfr Part Number
A4A9R47	0698-3457	6	1	RESISTOR 316K 1% .125W TF TC=0+-100	19701	SFR25H
A4A9R48*	0698-3458	7	1	RESISTOR 348K 1% .125W TF TC=0+-100	19701	SFR25H
A4A9R49	0698-3161	9	1	RESISTOR 38.3K 1% .125W TF TC=0+-100	19701	SFR25H
A4A9R50*	0757-0462	3	1	RESISTOR 75K +-1% .125W TF TC=0+-100	19701	SFR25H
A4A9R51	0757-0464	5	1	RESISTOR 90.9K +-1% .125W TF TC=0+-100	19701	SFR25H
A4A9R52*	0698-8960	6	1	RESISTOR 750K +-1% .125W TF TC=0+-100	19701	SFR25H
A4A9R53	0698-3449	6	1	RESISTOR 28.7K 1% .125W TF TC=0+-100	19701	SFR25H
A4A9R54	0757-0199	3	1	RESISTOR 21.5K +-1% .125W TF TC=0+-100	19701	SFR25H
A4A9R55*	0757-0460	1	1	RESISTOR 61.9K +-1% .125W TF TC=0+-100	19701	SFR25H
A4A9R56	0757-0460	1	1	RESISTOR 61.9K +-1% .125W TF TC=0+-100	19701	SFR25H
A4A9R57*	0698-3460	1	1	RESISTOR 422K 1% .125W TF TC=0+-100	19701	SFR25H
A4A9R58	0698-3450	9	1	RESISTOR 42.2K 1% .125W TF TC=0+-100	19701	SFR25H
A4A9R59*	0698-8824	1	1	RESISTOR 562K +-1% .125W TF TC=0+-100	19701	SFR25H
A4A9R60	2100-3103	6	1	RESISTOR-TRMR 10K 10% TKF SIDE-ADJ 17-TR	73138	89PR10K
A4A9R61	2100-3054	6	1	RESISTOR-TRMR 50K 10% TKF SIDE-ADJ 17-TR	73138	89PR50K
A4A9R62	2100-3162	7	1	RESISTOR-TRMR 200K 10% TKF SIDE-ADJ 17-T	73138	89PR200K
A4A9R63	0698-3437	2	1	RESISTOR 133 1% .125W TF TC=0+-100	19701	SFR25H
A4A9R64	0757-0289	2	1	RESISTOR 13.3K +-1% .125W TF TC=0+-100	19701	SFR25H
A4A9R65	2100-3162	7	1	RESISTOR-TRMR 200K 10% TKF SIDE-ADJ 17-T	73138	89PR200K
A4A9R66	2100-3054	6	1	RESISTOR-TRMR 50K 10% TKF SIDE-ADJ 17-TR	73138	89PR50K
A4A9R67	0698-0085	0	1	RESISTOR 2.61K 1% .125W TF TC=0+-100	19701	SFR25H
A4A9R68	0698-0085	0	1	RESISTOR 2.61K 1% .125W TF TC=0+-100	19701	SFR25H
A4A9R69	0698-3260	9	1	RESISTOR 464K 1% .125W TF TC=0+-100	19701	SFR25H
A4A9R70*	0698-8826	3	1	RESISTOR 825K +-1% .125W TF TC=0+-100	19701	SFR25H
A4A9R71	0757-0199	3	1	RESISTOR 21.5K +-1% .125W TF TC=0+-100	19701	SFR25H
A4A9R72*	0757-0467	8	1	RESISTOR 121K +-1% .125W TF TC=0+-100	19701	SFR25H
A4A9R74*	0757-0463	4	1	RESISTOR 82.51: +-1% .125W TF TC=0+-100	19701	SFR25H
A4A9R75	0698-3156	2	1	RESISTOR 14.7K 1% .125W TF TC=0+-100	19701	SFR25H
A4A9R76	0757-0465	6	1	RESISTOR 100K +-1% .125W TF TC=0+-100	19701	SFR25H
A4A9R77	0757-0442	9	1	RESISTOR 10K +-1% .125W TF TC=0+-100	19701	SFR25H
A4A9R78	0757-0280	3	1	RESISTOR 1K +-1% .125W TF TC=0+-100	19701	SFR25H
A4A9R79	0757-0280	3	1	RESISTOR 1K +-1% .125W TF TC=0+-100	19701	SFR25H
A4A9R80	0757-0280	3	1	RESISTOR 1K +-1% .125W TF TC=0+-100	19701	SFR25H
A4A9R81	0757-0280	3	1	RESISTOR 1K +-1% .125W TF TC=0+-100	19701	SFR25H
A4A9R82	0698-0084	9	1	RESISTOR 2.15K 1% .125W TF TC=0+-100	19701	SFR25H
A4A9R83*	0757-0438	3	1	RESISTOR 5.11K +-1% .125W TF TC=0+-100	19701	SFR25H
A4A9R84*	0757-0462	3	1	RESISTOR 75K +-1% .125W TF TC=0+-100	19701	SFR25H
A4A9R85*	0757-0467	8	1	RESISTOR 121K +-1% .125W TF TC=0+-100	19701	SFR25H
A4A9R86*	0757-0289	2	1	RESISTOR 13.3K +-1% .125W TF TC=0+-100	19701	SFR25H
A4A9R87*	0757-0417	8	1	RESISTOR 562 +-1% .125W TF TC=0+-100	19701	SFR25H
A4A9RT1	0837-0007	2	1	THERMISTOR DISC 10K-OHM TC=-4.4%/C-DEG	15801	JA41J1
A4A9RT2	0837-0380	4	1	THERMISTOR TUB WITH AXL LEADS SOK-OHM		MSC 503K
A4A9RT3	0837-0380	4	1	THERMISTOR TUB WITH AXL LEADS SOK-OHM		MSC 503K
A4A9RT4	0837-0007	2	1	THERMISTOR DISC 10K-OHM TC=-4.4%/C-DEG	15801	JA41J1
A4A9RT5	0837-0393	9	1	THERMISTOR DISC SK-OHM		1DC502K-270-S
A4A9TP1	1251-0600	0	1	CONNECTOR-SGL CONT PIN 1.14-MM-BSC-SZ SQ	27264	16-06-0034
A4A9TP2	1251-0600	0	1	CONNECTOR-SGL CONT PIN 1.14-MM-BSC-SZ SQ	27264	16-06-0034

**Indicates factory-selected value*

HP Part Number 85662-60222

A4A9 IF Control

Reference Designation	HP Part Number	CD	Qty	Description	Mfr Code	Mfr Part Number
A4A9U1	1826-0990	0	1	IC OP AMP GP DUAL 8-DIP-C PKG	04713	MC1458U
A4A9U2	1820-0468	5	1	IC DCDR TTL BCD-TO-DEC 4-TO-10-LINE 4-IN	01295	SN7445N
A4A9U3	1858-0076	0	1	TRANSISTOR ARRAY 14-PIN PLSTC TO-116	04713	MPQ2907P
A4A9U4	1858-0076	0	1	TRANSISTOR ARRAY 14-PIN PLSTC TO-116	04713	MPQ2907P
A4A9U5	1810-0277	3	1	NETWORK-RES 10-SIP 2.2K OHM X 9	91637	MSP10A01
A4A9U6	1820-0468	5	1	IC OCDR TTL BCD-TO-DEC 4-TO-10-LINE 4-IN	01295	SN7445N
A4A9U7	1820-1195	7	1	IC FF TTL LS D-TYPE POS-EDGE-TRIG COM CL	01295	SN74LS175N
A4A9U8	1858-0077	1	1	TRANSISTOR ARRAY 14-PIN PLSTC TO-116	04713	MPQ2222P
A4A9U9	1820-0471	0	1	IC INV TTL HEX 1-INP	01295	SN7406N
A4A9U10	1820-1196	8	1	IC FF TTL LS D-TYPE POS-EDGE-TRIG COM CL	01295	SN74LS174N
A4A9U11	1820-0468	5	1	IC DCDR TTL BCD-TO-DEC 4-TO-10-LINE 4-IN	01295	SN7445N
A4A9U12	1810-0280	8	1	NETWORK-RES 10-SIP 10.0K OHM X 9	91637	MSP10A01
A4A9U13	1820-1216	3	1	IC DCDR TTL LS 3-TO-8-LINE 3-INP	01295	SN74LS138N
A4A9U14	1820-1196	8	1	IC FF TTL LS D-TYPE POS-EDGE-TRIG COM CL	01295	SN74LS174N
A4A9U15	1820-0471	0	1	IC INV TTL HEX 1-INP	01295	SN7406N
A4A9U16	1858-0076	0	1	TRANSISTOR ARRAY 14-PIN PLSTC TO-116	04713	MPQ2907P
A4A9U17	1820-1196	8	1	IC FF TTL LS D-TYPE POS-EDGE-TRIG COM CL	01295	SN74LS174N
A4A9U18	1820-1196	8	1	IC FF TTL LS D-TYPE POS-EDGE-TRIG COM CL	01295	SN74LS174N
A4A9U19	1820-0471	0	1	IC INV TTL HEX 1-INP	01295	SN7406N
A4A9U20	1820-1196	8	1	IC FF TTL LS D-TYPE POS-EDGE-TRIG COM CL	01295	SN74LS174N
A4A9U21	1820-2024	3	1	IC DRVR TTL LS LINE DRVR OCTL	01295	SN74LS244N
A4A9U22	1810-0280	8	1	NETWORK-RES 10-SIP 10.0K OHM X 9	91637	MSP10A01
A4A9VR1	1902-3203	6	1	DIODE-ZNR 14.7V 5% DO-35 PD=.4W	04713	
A4A9VR2	1902-0041	4	1	DIODE-ZNR 5.11V 5% DO-35 PD=.4W	04713	
A4A9W1	8159-0005	0	1	RESISTOR-ZERO OHMS 22 AWG LEAD DIA	55210	L-2007-1
A4A9W4	8159-0005	0	1	RESISTOR-ZERO OHMS 22 AWG LEAD DIA	55210	L-2007-1

**Indicates factory-selected value*

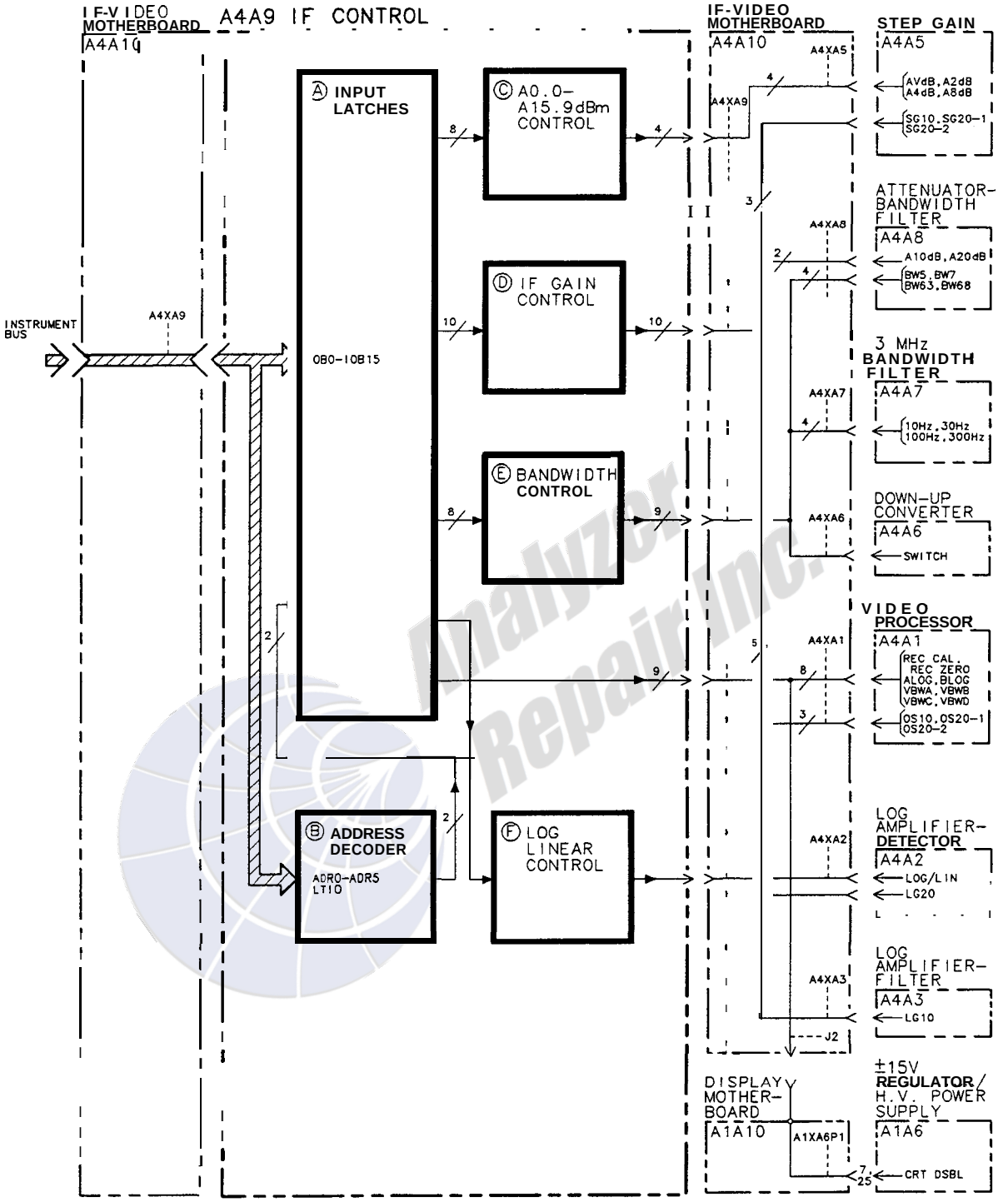

A4A9 IF Control, Block Diagram

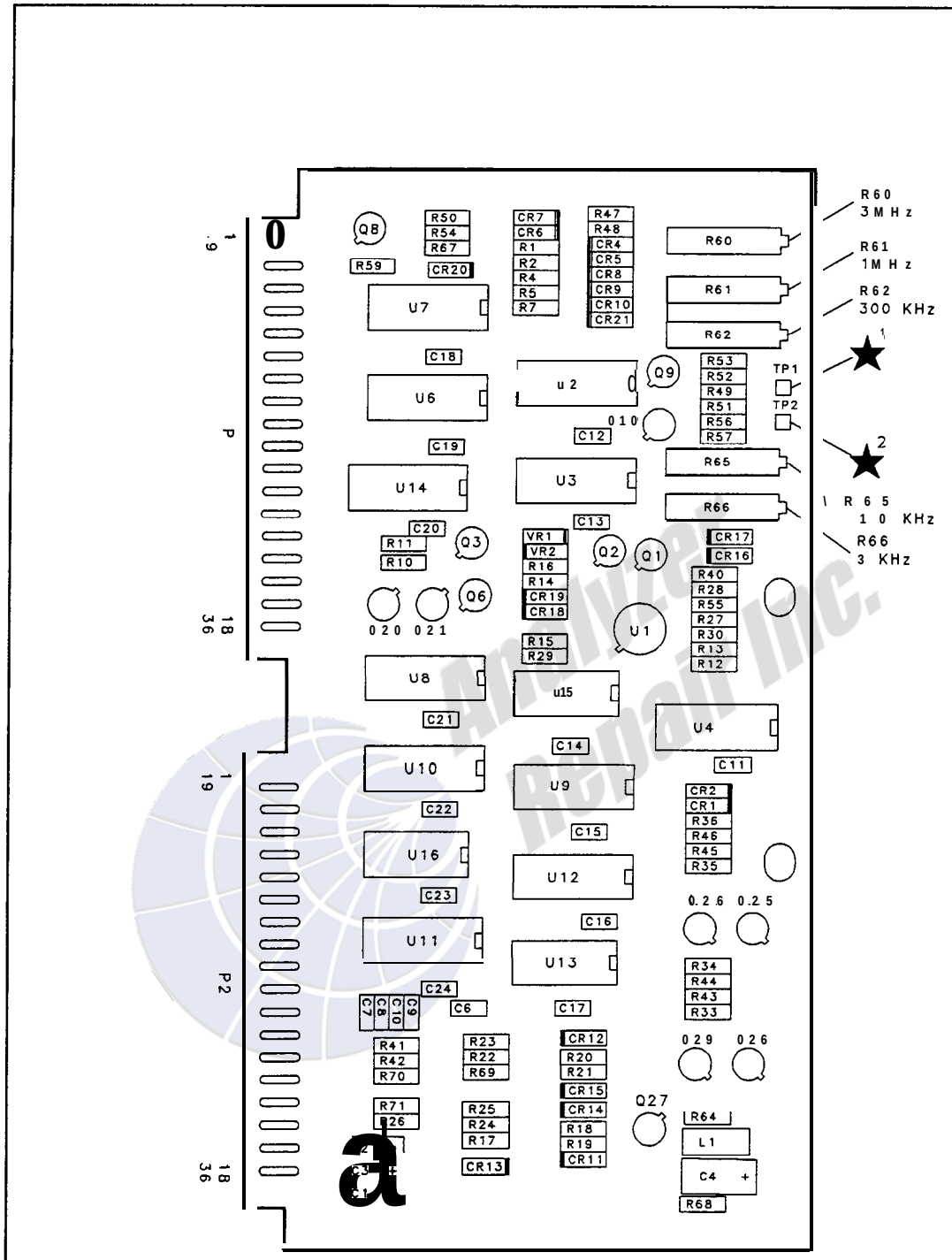

A4A9 IF Control Component Locations, 85662-60147

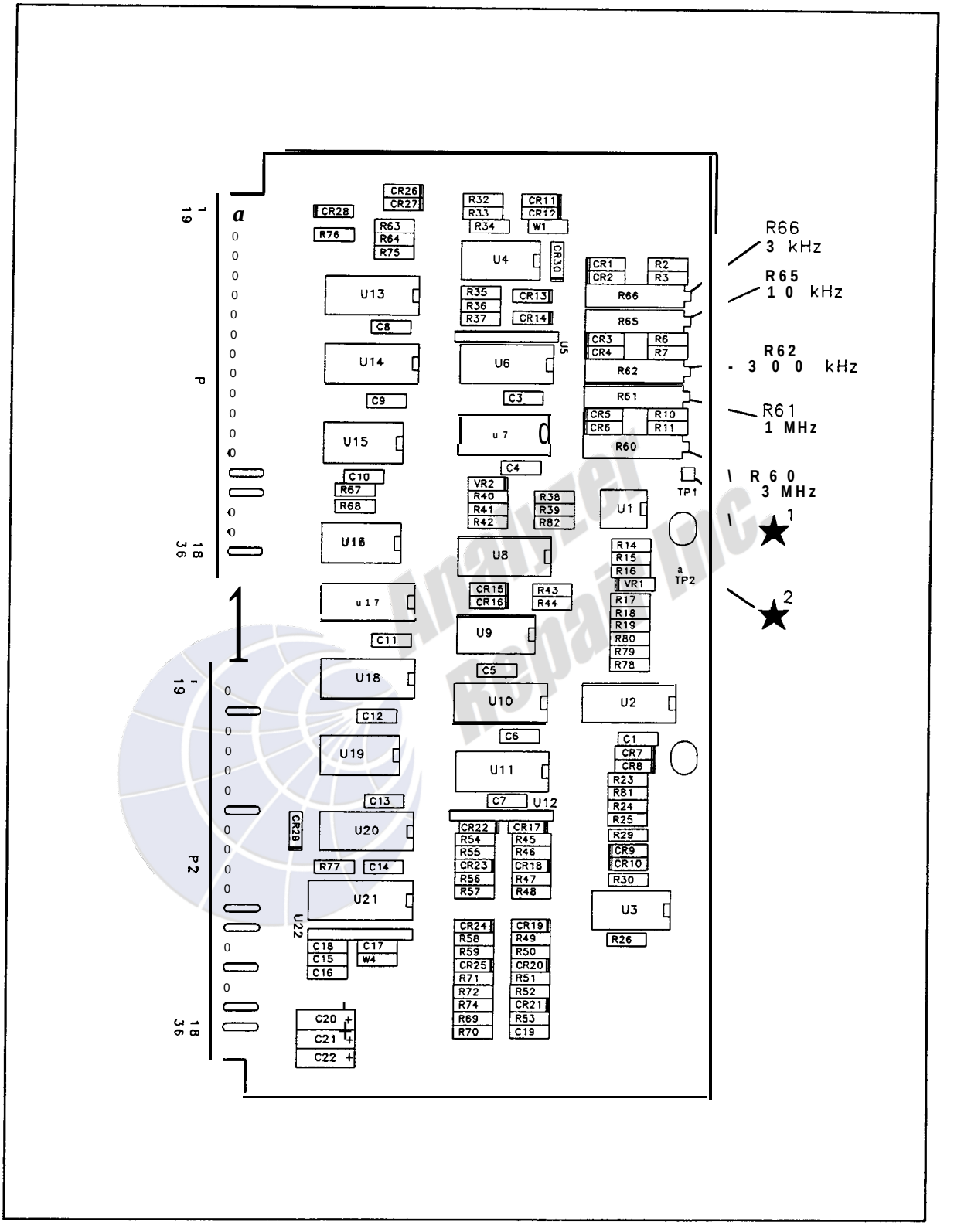

A4A9 IF Control Component Locations, 85662-60202

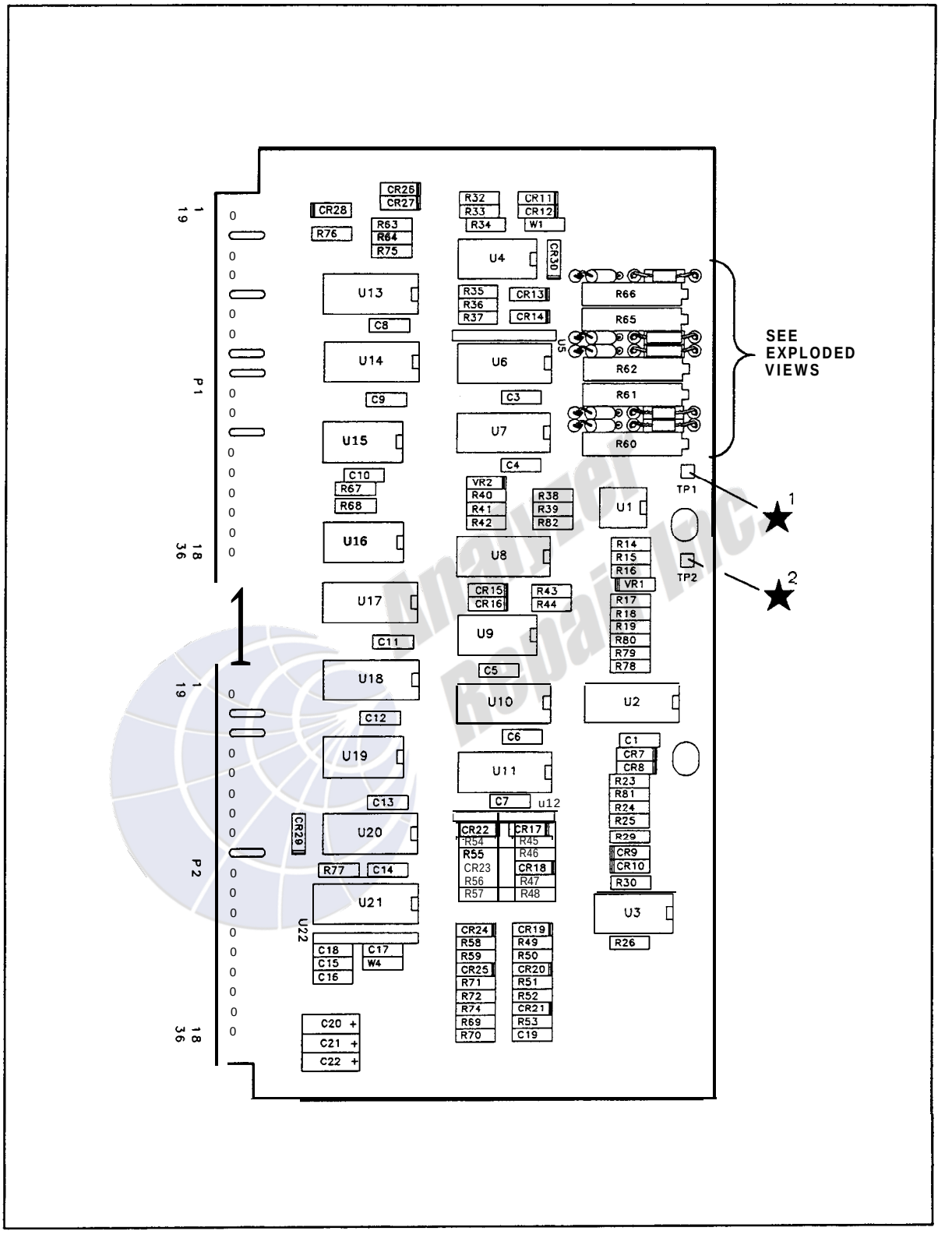

A4A9 IF Control Component Locations, 85662-60222 (1 of 2)

EXPLODED VIEWS

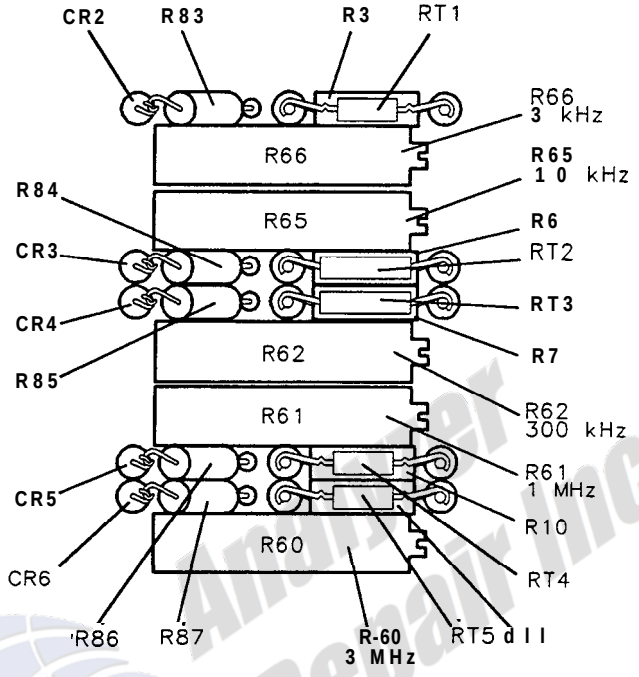

TOP VIEW

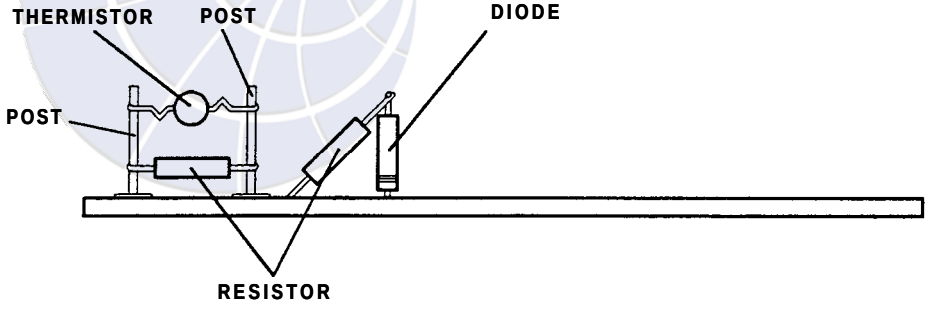

EXAMPLE OF COMPONENT LAYOUT, SIDE VIEW

A4A9 IF Control Component Locations, 85662-60222 (2 of 2)

A4A9 IF CONTROL
85662-60147
(SERIAL PREFIXES: 2403A – 2810A)

P1

PIN	SIGNAL	TO/FROM	FUNCTION BLOCK
1	REC CAL	A4A1P2-2	A
19	ALOG	A4A1P1-12	A
2	REC ZERO	A4A1P2-1	A
20	BLOG	A4A1P1-8	A
3	CRT DSBL	A1A6P1-7, 25	A
21	BW6$	A4A4P1-10	E
4	BW7	A4A8P1-10	E
22	LTIO	A4A10J1-49	B
5	BW8$	A4A8P1-11	E
23	ADR0$	A4A10J1-23	B
6	A1$dB	A4A8P1-7	D
24	ADR2	A4A10J1-25	B
7	A2$dB	A4A8P1-8	D
25	ADR4	A4A10J1-27	B
8	SG2$-2	A4A5P1-10	D
26	ADR3	A4A10J1-26	B
9	SG2$-1	A4A5P1-9	D
27	ADR1	A4A10J1-24	B
10	SG1$	A4A5P1-4	D
28	10B12	A4A10J1-15	A
11	SWITCH	A4A5P1-7	E
29	10B14	A4A10J1-17	A
12	BW5	A4A8,A4A3, A4A4	E
30	10B15	A4A10J1-18	A
13	LOG/LIN	A4A2,A4A3	F
31	10B13	A4A10J1-16	A
14	OS1$	A4A1P1-8	D
32	YBWO	A4A1P1-2	A
15	OS2$-1	A4A1P1-9	D
33	YBWC	A4A1P1-4	A
16	OS2$-2	A4A1P1-10	D
34	YBWO	A4A1P1-6	A
17	GND		G
35	YBWA	A4A1P1-5	A
18	LG2$	A4A2P2-7	D
36	LG1$	A4A3P2-7	D

P2

PIN	SIGNAL	TO/FROM	FUNCTION BLOCK
1	10B11	A4A10J1-14	A
19	10B6	A4A10J1-9	A
2	10B9	A4A10J1-12	A
20	10B8	A4A10J1-11	A
3	10B7	A4A10J1-10	A
21	10B1$	A4A10J1-13	A
4	A4dB	A4A5P2-16	C
22	A2dB	A4A5P2-17	C
5	A8dB	A4A5P2-15	C
23	GND		G
6	GND		G
24	GND		G
7	AVdB	A4A5P2-5	C
25	10B5	A4A10J1-8	A
8	GND		G
26	10B3	A4A10J1-6	A
9	GND		G
27	10B1	A4A10J1-4	A
10	GND		G
28	10B$	A4A10J1-3	A
11	GND		G
29	10B2	A4A10J1-5	A
12	30Hz	A4A7P2-1	E
30	10B4	A4A10J1-7	A
13	10Hz	A4A7P2-2	E
31	GND		G
14	300Hz	A4A7P2-7	E
32	GND		G
15	100Hz	A4A7P2-8	E
33	GND		G
16	+5V		G
34	+5V		G
17	−15V		G
35	−15V		G
18	+15V		G
36	+15V		G

P2-28 10B$
P2-27 10B1
P2-29 10B2
P2-26 10B3
P2-30 10B4
P2-25 10B5
P2-19 10B6
P2-3 10B7
P2-20 10B8
P2-2 10B9
P2-21 10B10
P2-1 10B11
P1-28 10B12
P1-31 10B13
P1-29 10B14
P1-30 10B15
P1-23 ADR0
P1-27 ADR1
P1-24 ADR2
P1-26 ADR3
P1-25 ADR4
P1-22 LTIO

Ⓐ INPUT LATCHES

U11 (10B4 10B2 10B$ 10B1 10B3 10B5): A1 dB, A.4 dB, A.1 dB, A.2 dB, A.8 dB, A2 dB
U10 (10B6 10B7 10B8 10B$1 10B9): A4dB, A8dB
U3 (10B14 10B13 10B15 10B12 10B13): RBWC, LRBWC, RBWB, LRBWB, RBWA, LRBWA
U6 (10B1$ 10B14 10B13 10B12 NC 10B11): P1-3 CRT DSBL, P1-20 B LOG, P1-19 A LOG, P1-1 REC CAL, P1-2 REC ZERO
U8 (10B8 10B6 10B7 NC 10B6 10B9): A1$ dB, SG1$, SG2$-2, SG2$-1, A2$ dB
U9 (10B3 10B4 10B15 10B$ 10B2 10B1): LG1$, LG2$, OS1$, OS2$-2, OS2$-1

Ⓑ ADDRESS DECODER

U7: ADR$ ADR1 ADR3 → LTIO ADR3 ADR4

Ⓒ POWER SUPPLIES

P2-18,35 +15V → C1 2.2
P2-16,34 +5V → C2 2.2
P2-17,35 −15V → C3 2.2
P1-17,P2-4,6,11,23,24,31-33 GND

Ⓒ A0.0–A15.9 DB CONTROL

U12 (X→Y): 0.4 dB, 0.8 dB, 1.6 dB, 1.4 dB, 1.8 dB
U13F, U13E, U13D, U13B, U13C
R20 10K, R18 10K, R17 10K, R21 10K, R19 10K
R23 82.5K, R25 38.3K, R26 31.6K, R22 23.7K, R24 16.2K
R70+ 444K, R69+ 133K, R71+ 237K — SEE NOTE 6
U16D, U16F, U16B, U16A, U16C: 0.1 dB, 0.2 dB
R41 383K, R42 178K
P2-7 AV dB, P2-22 A2 dB, P2-4 A4 dB, P2-5 A8 dB

Ⓓ IF GAIN

U14F, U15C, U14D, U15D, U14E, U15E, U15B, U15F
R10 2610, R11 2610
P1-6 A1$ dB, P1-10 SG1$, P1-8 SG2$-2, P1-9 SG2$-1, P1-7 A2$ dB, P1-36 LG1$, P1-18 LG2$, P1-14 OS1$, P1-16 OS2$-2, P1-15 OS2$-1

Ⓔ LOG LINEAR CONTROL

U1A, VR1 5.11V → P1-13 >+1V=LOG <-10V=LIN

Ⓒ BANDWIDTH CONTROL

U2 (X→Y): LRBWC, LRBWB, LRBWA
R1 10K, R2 10K, R4 10K, R5 10K, R7 10K
R49 464K, R47 5110, R54 464K, R50 464K, R57 100K
Q9, Q10, Q11
CR4, CR5, CR8, CR9, CR10, CR6, CR7, CR21, CR20
3MHz CW, 1 MHz CW, 300 kHz CW, 10 kHz CW, 3 kHz CW
R60 2000, R61 1470, R62 50K, R63 23.7K, R64 100K, R65 3160, R66 20K, R52 2370, R53 3630, R48 196Ω
P1-4 BW7, P1-5 BW8$, P1-21 BW6$, P1-11 SWITCH 0V FOR RES BW <1KHz, +14.7V FOR RES BW ≥3KHz
U14B
Q2, Q1, R30 5110, R40 12.1K, R55 10K −15 VP
R27 10K, R14 10K, R18 1300, Q3, Q6, VR2 14.7V, R15 10K, CR19, R29 750, CR18
P1-12 BW5 +14.8V FOR RES BW ≥100KHz −0.6V FOR RES BW ≤30KHz
R26 51.9K, CR16, CR17
U1B
U4 (X→Y): RBWC, RBWB, RBWA
R12 10K, R13 1000, R35 5110, R46 5110, R45 1000, R36 5110, R44 1020, R33 5110, R43 2610, R34 5110, R64 5110, R63 681
Q26, Q25, Q29, Q28, Q27
CR1, CR2, L1 5.6
C7 .001, C8 .001, C9 .001, C10 .001
R68 3160
P2-13 10Hz, P2-12 30Hz, P2-15 100Hz, P2-14 300Hz

NOTES:

1. REFERENCE DESIGNATORS WITHIN THIS ASSEMBLY ARE ABBREVIATED. FOR COMPLETE REFERENCE DESIGNATION, PREFIX ABBREVIATION WITH ASSEMBLY DESIGNATION.
2. UNLESS OTHERWISE INDICATED: RESISTANCE IS IN OHMS (Ω). CAPACITANCE IS IN MICROFARADS (μF) INDUCTANCE IS IN MICROHENRIES (μH).
3. UNLESS OTHERWISE INDICATED: SIGNALS ENTER AT LEFT SIDE OR TOP AND EXIT AT RIGHT SIDE OR BOTTOM OF FUNCTION BLOCKS.
4. MNEMONIC TABLE:

MNEMONIC	DESCRIPTION
AV DB, A.1 DB, A.2 DB, A.4 DB, A.8 DB, A1 DB, A2 DB, A4 DB, A8 DB	ATTENUATOR STEPS FOR AA4S STEP GAIN
A1$ DB, A2$ DB	ATTENUATOR STEPS FOR AA4S ATTEN-BW FILTER
ADR2–4	INSTRUMENT BUS ADDRESS BITS
ALOG, BLOG	LOG EXPAND CONTROLS FOR A4A1 VIDEO PROCESSOR
BW5, BW7, BW8$, BW6$	BANDWIDTH CONTROL LINES
10B$–15	INSTRUMENT BUS DATA BITS
LG1$, LG2$, LOG/LIN	LINEAR GAIN STEPS AND CONTROL FOR LOG AMPLIFIERS
LTIO	LOW = TOP BOX I/O
OS1$, OS2$–1, OS2$–2	OFFSET GAIN STEPS FOR AA4 VIDEO PROCESSOR
REC CAL, REC ZERO	RECORDER CALIBRATE RECORDER ZERO
SG1$, SG2$–1, SG2$–2	STEP GAIN 10 DB STEP GAIN 20 DB / 2 STEP GAIN 20 DB / 2
YBWA, YBWB, YBWC, YBWO	VIDEO BANDWITH CONTROL LINES

5. UNLESS OTHERWISE INDICATED LOGIC LEVELS ARE:
   +2.0V TO +6.0V = LOGIC "1" HIGH
   0V TO +0.8V = LOGIC "0" LOW=BLANK
6. R69+, R70+, AND R71+ ARE FACTORY-SELECTED COMPONENTS. TYPICAL VALUES ARE LISTED ON THE SCHEMATIC. ACCEPTABLE VALUES FOR THESE COMPONENTS ARE LISTED BELOW.

R69+	196KΩ–348KΩ
R70+	215KΩ–383KΩ
R71+	147KΩ–261KΩ

7. U13A, U14C, U15A, AND U16E ARE NOT USED.

A4A9

A4A9 IF CONTROL
85662-60202
85662-60200 (OPTION 067)
85662-60201 (OPTION H96)
(SERIAL PREFIXES: 2813A-2816A)

P1

PIN	SIGNAL	TO/FROM	FUNCTION BLOCK
1	REC CAL	A4A1P2-2	A
19	ALOG	A4A1P1-12	A
2	REC ZERO	A4A1P2-1	A
20	BLOG	A4A1P1-8	A
3	CRT DSBL	A1A6P1-7,25	A
21	BW8$	A4A4P1-10	E
4	BW7	A4A5P1-10	E
22	LTI0	A4A1U1-49	B
5	BW63	A4A8P1-11	E
23	ADR$	A4A1U1-23	B
6	A1$dB	A4A8P1-7	D
24	ADR2	A4A1U1-25	B
7	A2$dB	A4A8P1-8	D
25	ADR4	A4A1U2I-27	B
8	SG2$-1	A4A5P1-10	D
26	ADR3	A4A1U1-26	B
9	SG2$-1	A4A5P1-9	D
27	ADR1	A4A1U1-24	B
10	SG1$	A4A5P1-8	D
28	10B12	A4A1U1-15	A
11	SWITCH	A4A8P1-7	E
29	10B14	A4A1U1-17	A
12	BW5	A4A8_4A3, A4A4	E
30	10B15	A4A1U1-18	A
13	LOG/LIN	A4A2_4A3	F
31	10B13	A4A1U1-16	A
14	OS1$	A4A1P1-8	D
32	VBW0	A4A1P1-2	A
15	OS2$-1	A4A1P1-9	D
33	VBWC	A4A1P1-3	A
16	OS2$-2	A4A1P1-10	D
34	VBW3	A4A1P1-4	A
17	GND		G
35	VBWA	A4A1P1-5	A
18	LG2$	A4A2P2-7	D
36	LG1$	A4A3P2-7	D

P2

PIN	SIGNAL	TO/FROM	FUNCTION BLOCK
1	10B11	A4A1U2I-14	A
21	10B10	A4A1U2I-13	A
2	10B9	A4A1U2I-12	A
20	10B8	A4A1U2I-11	A
3	10B7	A4A1U2I-10	A
21	10B1$	A4A1U2I-13	A
4	A4dB	A4A5P2-16	C
22	A2dB	A4A5P2-17	C
5	A8dB	A4A5P2-15	C
23	GND		G
6	GND		G
24	GND		G
7	AVdB	A4A5P2-5	C
25	10B5	A4A1U1-8	A
8	GND		G
26	10B3	A4A1U1-6	A
9	GND		G
27	10B1	A4A1U1-4	A
10	GND		G
28	10B$	A4A1U1-3	A
11	GND		G
29	10B2	A4A1U1-5	A
12	30Hz	A4A7P2-1	E
30	10B4	A4A1U1-7	A
13	10Hz	A4A7P2-2	E
31	GND		G
14	300Hz	A4A7P2-7	E
32	GND		G
15	100Hz	A4A7P2-8	E
33	GND		G
16	+5V		G
34	+5V		G
17	-15V		G
35	-15V		G
18	+15V		G
36	+15V		G

Ⓐ INPUT LATCHES

Ⓒ A0.0–A15.9 DB CONTROL

Ⓔ BANDWIDTH CONTROL

Ⓒ POWER SUPPLIES

Ⓑ ADDRESS DECODER

Ⓑ IF GAIN

Ⓕ LOG LINEAR CONTROL

NOTES:

1. REFERENCE DESIGNATORS WITHIN THIS ASSEMBLY ARE ABBREVIATED. FOR COMPLETE REFERENCE DESIGNATOR, PREFIX ABBREVIATION WITH ASSEMBLY DESIGNATION.
2. UNLESS OTHERWISE INDICATED: RESISTANCE IS IN OHMS (Ω) CAPACITANCE IS IN MICROFARADS (μF) INDUCTANCE IS IN MICROHENRIES (μH)
3. UNLESS OTHERWISE INDICATED: SIGNALS ENTER AT LEFT SIDE OR TOP AND EXIT AT RIGHT SIDE OR BOTTOM OF FUNCTION BLOCKS.
4. MNEMONIC TABLE:

MNEMONIC	DESCRIPTION
AY,DB A.1 DB A.2 DB A.4 DB A.8 DB A1 DB A2 DB A4 DB A8 DB	ATTENUATOR STEPS FOR A4A5 STEP GAIN
A1$ DB A2$ DB	ATTENUATOR STEPS FOR A4A8 ATTEN-SW FILTER
ADR$-4	INSTRUMENT BUS ADDRESS BITS
ALOG BLOG	LOG EXPAND CONTROLS FOR A4A1 VIDEO PROCESSOR
BW0 BW1 BW63 BW8$	BANDWIDTH CONTROL LINES
10B$-15	INSTRUMENT BUS DATA BITS
LG1$ LG2$ LOG/LIN	LINEAR GAIN STEPS AND CONTROL FOR LOG AMPLIFIERS
LTI0	LOW = TOP BOX I/O
OS1$ OS2$-1 OS2$-2	OFFSET GAIN STEPS FOR A4A1 VIDEO PROCESSOR
REC CAL REC ZERO SG1$ SG2$-1 SG2$-2	RECORDER CALIBRATE RECORDER ZERO STEP GAIN 10 DB STEP GAIN 20 DB #1 STEP GAIN 20 DB #2
VBWA VBW0 VBWC VBW3	VIDEO BANDWITH CONTROL LINES

5. UNLESS OTHERWISE INDICATED LOGIC LEVELS ARE:
   +2.0V TO +6.0V = LOGIC '1' HIGH
   0V TO +0.8V = LOGIC '0' LOW
   BLANK
6. THE COMPONENTS LISTED BELOW ARE FACTORY-SELECTED COMPONENTS. TYPICAL VALUES ARE LISTED ON THE SCHEMATIC. ACCEPTABLE VALUES FOR THESE COMPONENTS ARE LISTED BELOW.

R2*	383Ω–550Ω
R3*	8.25kΩ–12.1kΩ
R6*	82.5kΩ–121kΩ
R9*	825kΩ–1.21MΩ
R10*	14.7kΩ–21.5kΩ
R11*	162Ω–237Ω
R48*	82.5kΩ–487kΩ
R48*	261kΩ–464kΩ
R50*	52.2kΩ–309kΩ
R52*	562Ω–1MΩ
R55*	49.44Ω–82.5kΩ
R57*	318kΩ–562kΩ
R59*	422kΩ–750kΩ
R70*	619kΩ–1.1MΩ
R72*	90.9kΩ–162kΩ
R74*	61.9kΩ–110kΩ

7. U8D, U9F, U15F, U18C, U19E, AND U19F ARE NOT USED.
8. JUMPER TABLE:

OPT	W1	W2	W3	W4	W5	W6	W7	W8	W9	W10	W11
010	O	C	O	C	O	O	O	O	O	O	O
067	O	C	O	C	O	O	O	O	O	O	O
H96	O	C	O	C	O	O	O	O	O	O	O

9. R73 IS ONLY LOADED FOR OTION 067.

A4A9 IF CONTROL
85662-60222
85662-60224 (OPTION 067)
85662-60225 (OPTION H96)
(SERIAL PREFIX: 2848A)

P1

PIN	SIGNAL	TO/FROM	FUNCTION BLOCK
1	REC CAL	A4A1P2-2	A
19	ALOG	A4A1P1-12	A
2	REC ZERO	A4A1P2-1	A
20	BLOG	A4A1P1-6	A
3	CRT DSBL	A1A8P1-7,25	A
21	BW6Ø	A4A9P1-10	E
4	BW7	A4A9P1-10	E
22	LT1Ø	A4A1OJ1-49	B
5	BW63	A4A9P1-11	E
23	ADR3ϕ	A4A1OJ1-23	B
6	A1fdB	A4A9P1-7	D
24	ADR2	A4A1OJ1-25	B
7	A2fdB	A4A9P1-8	D
25	ADR4	A4A1OJ1-27	B
8	SG2ϕ-2	A4A9P1-10	G
26	ADR3	A4A1OJ1-26	B
9	SG2ϕ-1	A4A9P1-9	D
27	ADR1	A4A1OJ1-24	B
10	SG1ϕ	A4A9P1-8	D
28	1ØB12	A4A1OJ1-15	A
11	SWITCH	A4A9P1-7	E
29	1ØB14	A4A1OJ1-17	A
12	BW5	A4A9,A4A3, A4A4	E
30	1ØB15	A4A1OJ1-18	A
13	LOG/LIN	A4A2,A4A3	F
31	1ØB13	A4A1OJ1-16	A
14	OS1ϕ	A4A1P1-8	D
32	VBWD	A4A1P1-2	A
15	OS2ϕ-1	A4A1P1-9	D
33	VBWC	A4A1P1-3	A
16	OS2ϕ-2	A4A1P1-10	D
34	VBWB	A4A1P1-4	A
17	GND	A4A9P1-5	G
35	VBWA	A4A1P1-5	A
18	LG2ϕ	A4A2P2-7	D
36	LG1ϕ	A4A3P2-7	D

P2

PIN	SIGNAL	TO/FROM	FUNCTION BLOCK
1	1ØB11	A4A1OJ1-14	A
19	1ØB5	A4A1OJ1-9	A
2	1ØB9	A4A1OJ1-12	A
20	1ØB8	A4A1OJ1-11	A
3	1ØB7	A4A1OJ1-10	A
21	1ØB1ϕ	A4A1OJ1-13	A
4	A4dB	A4A5P2-16	C
22	A2dB	A4A5P2-17	C
5	ABdB	A4A5P2-15	C
23	GND		G
6	GND		G
24	GND		G
7	AVdB	A4A5P2-5	C
25	1ØB5	A4A1OJ1-8	A
8	GND		G
26	1ØB3	A4A1OJ1-6	A
9	GND		G
27	1ØB1	A4A1OJ1-4	A
10	GND		G
28	1ØB4	A4A1OJ1-3	A
11	GND		G
29	1ØB2	A4A1OJ1-5	A
12	3ØHz	A4A7P2-1	E
30	1ØB6	A4A1OJ1-7	A
13	1ØHz	A4A7P2-2	E
31	GND		G
14	3ØØHz	A4A7P2-7	E
32	GND		G
15	1ØØHz	A4A7P2-8	E
33	GND		G
16	+5V		G
34	+5V		G
17	−15V		G
35	−15V		G
18	+15V		G
36	+15V		G

Ⓐ INPUT LATCHES

Ⓑ POWER SUPPLIES

Ⓒ A0.0–A15.9 DB CONTROL

Ⓓ IF GAIN

Ⓔ BANDWIDTH CONTROL

Ⓕ LOG LINEAR CONTROL

Ⓖ ADDRESS DECODER

NOTES:
1. REFERENCE DESIGNATORS WITHIN THIS ASSEMBLY ARE ABBREVIATED. FOR COMPLETE REFERENCE DESIGNATION, PREFIX ABBREVIATION WITH ASSEMBLY DESIGNATION.
2. UNLESS OTHERWISE INDICATED: RESISTANCE IS IN OHMS (Ω) CAPACITANCE IS IN MICROFARADS (μF) INDUCTANCE IS IN MICROHENRIES (μH)
3. UNLESS OTHERWISE INDICATED: SIGNALS ENTER AT LEFT SIDE OR TOP AND EXIT AT RIGHT SIDE OR BOTTOM OF FUNCTION BLOCKS.
4. MNEMONIC TABLE:

MNEMONIC	DESCRIPTION
AV DB A.1 DB A.2 DB A.4 DB A.8 DB	ATTENUATOR STEPS FOR A4A5 STEP GAIN
A1ϕ DB A2ϕ DB	ATTENUATOR STEPS FOR A4A5 ATTEN-DW FILTER
ADR3F-4	INSTRUMENT BUS ADDRESS BITS
ALOG BLOG	LOG EXPAND CONTROLS FOR A4A1 VIDEO PROCESSOR
BW5 BW7 BW63 BW6Ø	BANDWIDTH CONTROL LINES
1ØØF-15	INSTRUMENT BUS DATA BITS
LG1ϕ LG2ϕ LOG/LIN	LINEAR GAIN STEPS AND CONTROL FOR LOG AMPLIFIERS
LT1Ø	LOW = TOP BOX I/O
OS1ϕ OS2ϕ-1 OS2ϕ-2	OFFSET GAIN STEPS FOR A4A1 VIDEO PROCESSOR
REC CAL REC ZERO SG1ϕ SG2ϕ-1 SG2ϕ-2	RECORDER CALIBRATE RECORDER ZERO STEP GAIN 10 DB STEP GAIN 20 DB ƒ1 STEP GAIN 20 DB ƒ2
VBWA VBWB VBWC VBWD	VIDEO BANDWITH CONTROL LINES

5. UNLESS OTHERWISE INDICATED LOGIC LEVELS ARE:
   +2.0V TO +6.0V = LOGIC '1' HIGH
   0V TO +0.8V = LOGIC '0' LOW
6. THE COMPONENTS LISTED BELOW ARE FACTORY-SELECTED COMPONENTS. TYPICAL VALUES ARE LISTED ON THE SCHEMATIC. ACCEPTABLE VALUES FOR THESE COMPONENTS ARE LISTED BELOW.

R1ϕ	1.05kΩ–1.10kΩ
R5*	6.81kΩ–10.2kΩ
R6*	34.0kΩ–56.2kΩ
R7*	28.7kΩ–42.2kΩ
R11*	6.19kΩ–9.09kΩ
R47*	348kΩ–511kΩ
R48*	82.5kΩ–147kΩ
R49*	261kΩ–464kΩ
R5Ø*	56.2kΩ–100kΩ
R52*	178kΩ–316kΩ
R53*	42.2kΩ–80.6kΩ
R56*	316kΩ–562kΩ
R57*	422kΩ–750kΩ
R58*	619kΩ–1.1MΩ
R7Ø*	90.9kΩ–182kΩ
R74*	51.1kΩ–110kΩ
R75*	100kΩ–200kΩ
R84*	42.2kΩ–100kΩ
R85*	75kΩ–178kΩ
R86*	10.0kΩ–51.1kΩ
R87*	100Ω–511Ω
R88*	100Ω–511Ω

7. U8D, U9F, U15F, U16C, U19E, AND U19F ARE NOT USED.
8. JUMPER TABLE

OPTION	W1	W2	W3	W4	W5	W6	W7	W8	W9	W10	W11
STD	C	O	C	O	O	O	O	O	O	O	O
Ø67	O	C	O	O	O	O	O	O	O	O	O
H96	C	O	O	O	O	O	O	O	O	O	O

9. CR1, R73, R88, R2, R78, AND W2 ARE LOADED ON 85662-60224 ONLY. THESE COMPONENTS ARE NOT LOADED ON 85662-60222 OR 85662-60225.

HP Part Number 85662-60149

A4A10 IF-Video Motherboard

Reference Designatior	HP Part Number	CD	Qty	Description	Mfr Code	Mfr Part Number
A4A10	85662-60149		1	IF-VIDEO MOTHERBOARD ASSEMBLY	2848(	85662-60149
A4A10C1	0180-1746		1	CAPACITOR-FXD 15UF+-10% 20VDC TA	5628S	1500156X902082-DYS
A4A10C2	0180-0229		1	CAP-FXD 33uF 10 V TA	5628S	150D336X9010B2-DYS
A4A10C3	0180-1746	5	1	CAPACITOR-FXD 15UF+-10% 20VDC TA	5628S	150D156X9020B2-DYS
A4A10C4	0160-4833	5	1	CAPACITOR-FXD .022UF +-10% 100VDC CER	04222	SA201C223KAAH
A4A10C5	0160-4833		1	CAPACITOR-FXD .022UF +-10% 100VDC CER	04222	SA201C223KAAH
A4A10C6	0160-4833		1	CAPACITOR-FXD .022UF +-10% 100VDC CER	04222	SA201C223KAAH
A4A10C7	0160-4833		1	CAPACITOR-FXD .022UF +-10% 100VDC CER	04222	SA201C223KAAH
A4A10C8	0160-4833		1	CAPACITOR-FXO .022UF +-10% 100VDC CER	04222	SA201C223KAAH
A4A10C9	0160-4833	!	1	CAPACITOR-FXD .022UF +-10% 100VDC CER	04222	SA201C223KAAH
A4A10C10	0160-4833	!	1	CAPACITOR-FXD .022UF +-10% 100VDC CER	04222	SA201C223KAAH
A4A10C11	0160-4833	5	1	CAPACITOR-FXD .022UF +-10% 100VDC CER	04222	SA201C223KAAH
A4A10C12	0160-4833	5	1	CAPACITOR-FXD .022UF +-10% 100VDC CER	04222	SA201C223KAAH
A4A10C13	0160-4832	4	1	CAPACITOR-FXD .01UF +-10% 100VDC CER	04222	SA101C103KAAH
A4A10C14	0160-4833	5	1	CAPACITOR-FXD .022UF +-10% 100VDC CER	04222	SA201C223KAAH
A4A10C15	0160-4832	4	1	CAPACITOR-FXD .01UF +-10% 100VDC CER	04222	SA101C103KAAH
A4A10C16	0160-4833	5	1	CAPACITOR-FXD .022UF +-10% 100VDC CER	04222	SA201C223KAAH
A4A10C17	0160-4833	5	1	CAPACITOR-FXD .022UF +-10% 100VDC CER	04222	SA201C223KAAH
A4A10C18	0160-4833	5	1	CAPACITOR-FXD .022UF +-10% 100VDC CER	04222	SA201C223KAAH
A4A10C19	0160-4574	1	1	CAPACITOR-FXD 1000PF +-10% 100VDC CER	04222	SA101C102KAAH
A4A10C20	0160-4574	1	1	CAPACITOR-FXD 1000PF +-10% 100VDC CER	04222	SA101C102KAAH
A4A10C21	0160-4574	1	1	CAPACITOR-FXD 1000PF +-10% 100VDC CER	04222	SA101C102KAAH
A4A10C22	3160-4574	1	1	CAPACITOR-FXD 1000PF +-10% 100VDC CER	04222	SA101C102KAAH
A4A10C23	0160-4832	4	1	CAPACITOR-FXD .01UF +-10% 100VDC CER	04222	SA101C103KAAH
A4A10J1	1251-8432	2	1	CONN-POST TYPE .100-PIN-SPCG 50-CONT	18873	68021-650
A4A10J2	1251-3276	2	1	CONN-POST TYPE .156-PIN-SPCG 6-CONT	27264	09-60-1061
A4A10L1	9100-1618	1	1	INDUCTOR RF-CH-MLD 5.6UH +-10% .166D-INX	99800	1537-30
A4A10L2	9100-1618	1	1	INDUCTOR RF-CH-MLO 5.6UH +-10% .166D-INX	99800	1537-30
A4A10L3	9100-1618	1	1	INDUCTOR RF-CH-MLO 5.6UH +-10% .166D-INX	99800	1537-30
A4A10L4	18558-80011	6	1	FILTER COIL BLUE	28480	08558-80011
A4A10L5	08558-80011	6	1	FILTER COIL BLUE	28480	08558-80011
A4A10L6	08558-80011	6	1	FILTER COIL BLUE	28480	08558-80011
A4A10L7	9100-1618	1	1	INDUCTOR RF-CH-MLD 5.6UH +-10% .166D-INX	99800	1537-30
A4A10L8	9100-1618	1	1	INDUCTOR RF-CH-MLD 5.6UH +-10% .166D-INX	99800	1537-30
A4A10L9	9100-1618	1	1	INDUCTOR RF-CH-MLD 5.6UH +-10% .166D-INX	99800	1537-30
A4A10L10	1100-1618	1	1	INDUCTOR RF-CH-MLD 5.6UH +-10% .166D-INX	99800	1537-30
A4A10L11	9100-1618	1	1	INDUCTOR RF-CH-MLO 5.6UH +-10% .166D-INX	99800	1537-30
A4A10L12	9100-1618	1	1	INDUCTOR RF-CH-MLO 5.6UH +-10% .166D-INX	99800	1537-30
A4A10L13	1100-1618	1	1	INDUCTOR RF-CH-MLD 5.6UH +-10% .166D-INX	99800	1537-30
A4A10L14	9100-1618	1	1	INDUCTOR RF-CH-MLD 5.6UH +-10% .166D-INX	99800	1537-30
A4A10R1	1757-0401	0	1	RESISTOR 100 +-1% .125W TF TC=0+-100	19701	SFR25H
A4A10R2	1757-0401	0	1	RESISTOR 100 +-1% .125W TF TC=0+-100	19701	SFR25H
A4A10R3	1757-0401	0	1	RESISTOR 100 +-1% .125W TF TC=0+-100	19701	SFR25H
A4A10R4	1757-0401	3	1	RESISTOR 100 +-1% .125W TF TC=0+-100	19701	SFR25H
A4A10A4XA1P1	251-0472	4	1	CONNECTOR-PC EDGE 6-CONT/ROW P-ROWS	26742	220-620-03
A4A10A4XA1P2	251-0472	4	1	CONNECTOR-PC EDGE 6-CONT/ROW 2-ROWS	26742	220-620-03
A4A10A4XA2P1	251-0472	4	1	CONNECTOR-PC EDGE 6-CONT/ROW 2-ROWS	26742	220-620-03

**Indicates factory-selected value*

HP Part Number 85662-60149

A4A10 IF-Video Motherboard

Reference Designation	HP Part Number	CD	Qty	Description	Mfr Code	Mfr Part Number
A4A10A4XA2P2	1251-0472	4	1	CONNECTOR-PC EDGE 6-CONT/ROW L-ROWS	26742	220-620-03
A4A10A4XA3P1	1251-0472	4	1	CONNECTOR-PC EDGE 6-CONT/ROW L-ROWS	26742	220-620-03
A4A10A4XA3P2	1251-0472	4	1	CONNECTOR-PC EDGE 6-CONT/ROW 2-ROWS	26742	220-620-03
A4A10A4XA4P1	1251-0472	4	1	CONNECTOR-PC EDGE 6-CONT/ROW 2-ROWS	26742	220-620-03
A4A10A4XA4P2	1251-0472	4	1	CONNECTOR-PC EDGE 6-CONT/ROW P-ROWS	26742	220-620-03
A4A10A4XA5P1	1251-0472	4	1	CONNECTOR-PC EDGE 6-CONT/ROW L-ROWS	26742	220-620-03
A4A10A4XA5P2	1251-2034	8	1	CONNECTOR-PC EDGE IO-CONT/ROW 2-ROWS		SCM10D/7-1HP
A4A10A4XA6A1P1	1251-0472	4	1	CONNECTOR-PC EDGE 6-CONT/ROW 2-ROWS	26742	220-620-03
A4A10A4XA6A2P1	1251-0472	4	1	CONNECTOR-PC EDGE 6-CONT/ROW L-ROWS	26742	220-620-03
A4A10A4XA7P1	1251-0472	4	1	CONNECTOR-PC EDGE 6-CONT/ROW L-ROWS	26742	220-620-03
A4A10A4XA7P2	1251-0472	4	1	CONNECTOR-PC EDGE 6-CONT/ROW 2-ROWS	26742	220-620-03
A4A10A4XA8P1	1251-0472	4	1	CONNECTOR-PC EDGE 6-CONT/ROW 2-ROWS	26742	220-620-03
A4A10A4XA8P2	1251-0472	4	1	CONNECTOR-PC EDGE 6-CONT/ROW 2-ROWS	26742	220-620-03
A4A10A4XA9P1	1251-2026	8	1	CONNECTOR-PC EDGE 18-CONT/ROW 2-ROWS		SCM18D/7-1HP
A4A10A4XA9P2	1251-2026	8	1	CONNECTOR-PC EDGE 18-CONT/ROW 2-ROWS		SCM18D/7-1HP

Analyzer Repair Inc.

**Indicates factory-selected value*

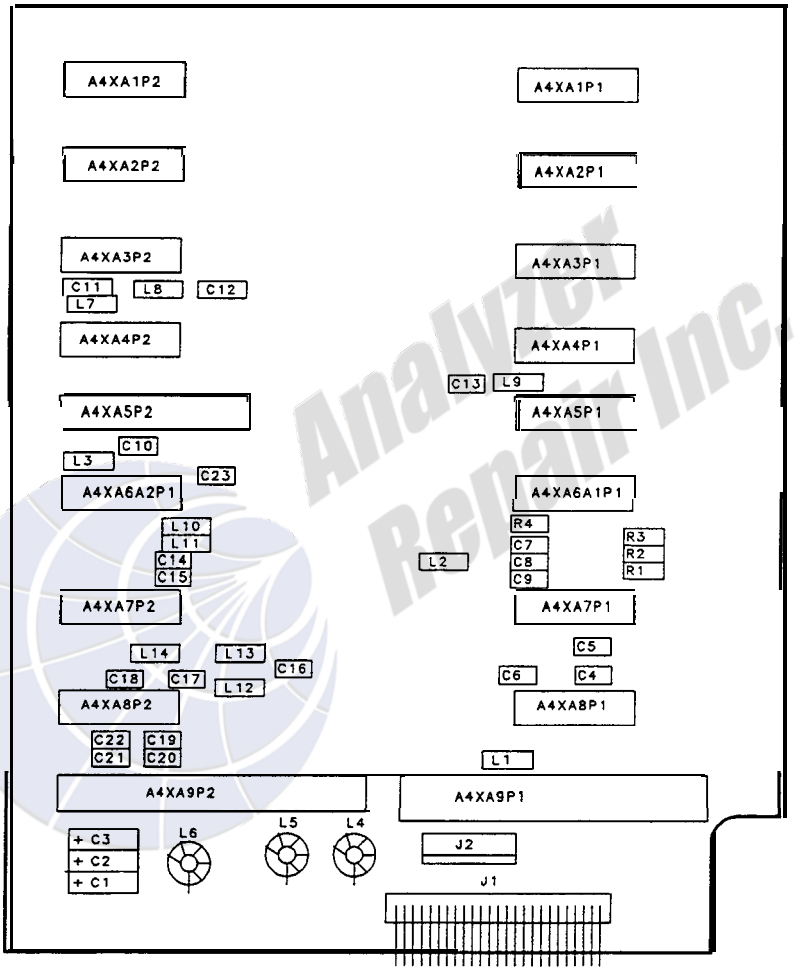

A4A10 IF-Video Motherboard Component Locations, 85662-60149

A4A10 IF-VIDEO MOTHERBOARD
85662-60149
(SERIAL PREFIX: 2403A)

J1 50-WIRE INSTRUMENT BUS

PIN	SIGNAL
1	GND
2	NC
3	10BF
4	10B1
5	10B2
6	10B3
7	10B4
8	10B5
9	10B6
10	10B7
11	10B8
12	10B9
13	10B10
14	10B11
15	10B12
16	10B13
17	10B14
18	10B15
19	NC
20	NC
21	NC
22	HPGN (NC)
23	ADR8
24	ADR1
25	ADR2
26	ADR3
27	ADR4
28	ADR5 (NC)
29	NC
30	NC
31	KR8 (NC)
32	KR9 (NC)
33	KR10 (NC)
34	KR11 (NC)
35	KC8 (NC)
36	KC1 (NC)
37	KC2 (NC)
38	KC3 (NC)
39	KC4 (NC)
40	KC5 (NC)
41	KC6 (NC)
42	KC7 (NC)
43	LSTP (NC)
44	HSWP (NC)
45	LSRQ (NC)
46	LDSR (NC)
47	LB1Q (NC)
48	GND
49	LT1Q
50	GND

POWER SUPPLIES

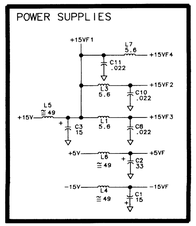

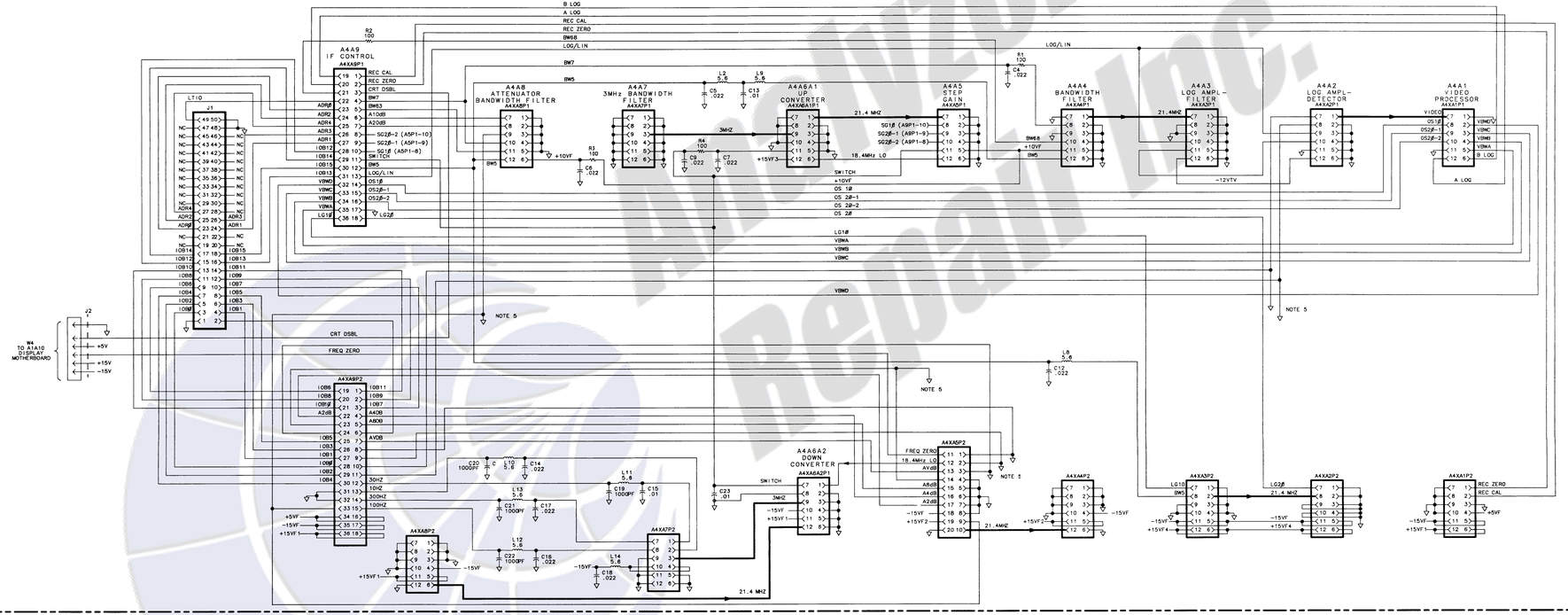

NOTES:

1. REFERENCE DESIGNATORS WITHIN THIS ASSEMBLY ARE ABBREVIATED. FOR COMPLETE REFERENCE DESIGNATION, PREFIX ABBREVIATION WITH ASSEMBLY DESIGNATION.
2. UNLESS OTHERWISE INDICATED: RESISTANCE IS IN OHMS (Ω). CAPACITANCE IS IN MICROFARADS (μF). INDUCTANCE IS IN MICROHENRIES (μH).
3. MNEMONIC TABLE:

MNEMONIC	DESCRIPTION
SG1# SG2#-1 SG2#-2	STEP GAIN CONTROLS
OS1# OS2#-1 OS2#-2	OFFSET GAIN CONTROLS
LG1# LG2#	LINEAR GAIN CONTROLS
VBWA VBWB VBWC VBWD	VIDEO BANDWIDTH CONTROLS
RBWA RBWB RBWC RBWD	RESOLUTION BANDWIDTH CONTROLS
VIDEO SWITCH 18.4MHz LO 21.4MHz 3MHz	VIDEO SIGNAL UP/DOWN CONVERTER LOCAL OSC SIGNAL 21.4MHz IF SIGNAL 3MHz IF SIGNAL
BW5 BW7 BW8 3 BW8 8	BANDWIDTH CONTROL
FREQ ZERO CRT DSBL REC CAL REC ZERO	FREQ ZERO CONTROL CRT DISABLE CONTROL RECORDER CALIBRATION RECORDER ZERO
A LOG B LOG	LOG EXPAND CONTROL
LOG/LIN	LOG/LINEAR CONTROL
A2dB A4dB A8dB A10dB A20dB AVdB	ATTENUATION CONTROLS
10BF–10B15	INSTRUMENT BUS DATA BITS 8–15
ADR8–ADR4	INSTRUMENT BUS ADDRESS BITS
LTIO	LOW-DISPLAY SECTION I/O STROBE

4. UNLESS OTHERWISE INDICATED: SIGNALS ENTER AT LEFT SIDE AND EXIT AT RIGHT SIDE OF FUNCTION BLOCKS.
5. THE FOLLOWING PINS ARE GROUNDED THROUGH THE A4A5 STEP GAIN BOARD, THE A4A8 ATTENUATOR BANDWIDTH FILTER BOARD, AND THE A4A9 IF CONTROL BOARD:

CONNECTOR	PINS
A4XA2P1	7,8
A4XA5P2	1,2,3,9,14
A4XA8P2	1, 8,9,10,11,23,24,33
A4XA9P2	

A4A10

A4A10 IF-VIDEO MOTHERBOARD, INTERCONNECT DIAGRAM

Options

The HP 85662A IF-Display Section has several options that may be ordered. Each option is listed below with a brief description of the option and the changes to the IF-Display Section.

Three of these options (Option 067, Option H96, and Option 462) require substantial printed circuit board changes and have separate sections in this manual. The PC board changes of these options are documented either behind the tab for the assembly that changed or behind the tab for the option that requires a PC board change. Parts lists for option assemblies are located behind the tab of that option. Component locations and schematic diagrams for option assemblies are incorporated onto the component location or schematic diagram of the standard version where possible. However, many instances require that an option assembly have its own component location or schematic diagram. These versions of the component location or schematic diagram are located behind the tab for that option.

Analyzer Repair Inc.

List of Options

Option 067

HP 8567A Spectrum Analyzer

This option has a minimum resolution bandwidth of 1 kHz. Refer to the Hewlett-Packard Test and Measurement Catalog for additional information regarding the HP 85678 Spectrum Analyzer.

The following assemblies have changed for this option.

A4A5 Step Gain

A4A6 Output Driver/Input Buffer

A4A7 3 MHz Bandwidth Filter

A4A9 IF Control

Option H96

HP 8568B Option E96 and HP 8568B Option E44 Spectrum Analyzer

This option does not have 10 Hz and 3 MHz Resolution Bandwidths.

The following assemblies have changed for this option.

A4A7 3 MHz Bandwidth Filter

A4A9 IF Control

Option 462

HP 8566B Option 462 and HP 8568B Option 462 Spectrum Analyzers

This option is the Impulse Bandwidth/6 dB Bandwidth option. Resolution bandwidths from 1 kHz through 3 MHz are impulse bandwidths. Resolution bandwidths from 10 Hz through 300 Hz are 6 db bandwidths.

The following assemblies have changed for this option.

A4A4 Bandwidth Filter

A4A7 3 MHz Bandwidth Filter

A4A8 Attenuator-Bandwidth Filter

A4A9 IF Control

Option 400

This option allows for operation using a 400 Hz line frequency. The rear panel fan is changed and a printed circuit board assembly with a start-up capacitor is added for this option.

Other Options

Option 010 - Rack Mount Slide Kit

This option supplies the necessary hardware and installation instructions for mounting an instrument on slides into a rack of 482.6 mm (19 inch) spacing. The heavy-duty slides are designed specifically to support the weight of this spectrum analyzer. Option 010 is also available as a kit (HP part number 5062-6407).

Option 080 - Information Cards in Japanese

This option provides information cards for the tray beneath the RF Section in the Japanese language.

Option 081 - Information Cards in French

This option provides information cards for the tray beneath the RF Section in the French language.

Option 908 - Rack Flange Kit (without handles)

This option supplies the necessary hardware and installation instructions for mounting an instrument, without handles, into a rack of 482.6 mm (19 inch) spacing. Option 908 is also available as a kit (HP part number 5062-3986).

Option 913 - Rack Flange Kit (with handles)

This option supplies the necessary hardware and installation instructions for mounting an instrument, with handles, into a rack of 482.2 mm (19 inch) spacing. Option 913 is also available as a kit (HP part number 5062-3986).

Analyzer Repair Inc.

Option 067

HP 85662A Option 067 is the IF-Display Section that is used with the HP 8567A Spectrum Analyzer. This option has a minimum resolution bandwidth of 1 kHz. Refer to Hewlett-Packard Test and Measurement Catalog for additional information regarding the HP 8567A Spectrum Analyzer.

Option 067 Assemblies

The following Option 067 assemblies are covered in this manual:

A4A5 Step Gain (85662-60172)

A4A6 Output Driver/Input Buffer (85662-60177)

A4A7 3 MHz Bandwidth Filter (Not included with Option 067)

A4A9 IF Control (85662-60169, 85662-60200, 85662-60224)

A4A5 Step Gain (85662-60172)

The parts list, the component locations, and the schematic diagram for this assembly are located in this section.

A4A6 Output Driver/Input Buffer (85662-60177)

This assembly includes the A4A6A1 Input Buffer (85662-60171) and the A4A6A2 Output Driver (85662-60170). The parts list, the block diagram, and the schematic diagram for the A4A6 assembly are located in this section. The circuit descriptions, the parts lists, and the component locations for the A4A6A1 and the A4A6A2 are also located in this section.

A4A7 3 MHz Bandwidth Filter

The A4A7 3 MHz Bandwidth Filter assembly is not used in the Option 067 IF-Display Section.

A4A9 IF Control (85662-60169, 85662-60200, 85662-60224)

This assembly has three versions. Troubleshooting tables for the Option 067 A4A9 versions are located in this section. The parts lists and the component locations for each version are located in this section. The schematic diagram for 85662-60169 is also located in this section. The schematic diagram for the 85662-60200 and the schematic diagram for 85662-60224 are located in the A4A9 section of this manual.

Analyzer Repair Inc.

A4A6A1 Input Buffer, Circuit Description

Input Buffer Ⓐ

The input buffer has about 6 dB of gain to compensate for the loss incurred by the output driver in A4A6A2, which converts the 21.4 MHz IF signal into a 50Ω system.

A4A6A2 Output Driver, Circuit Description

Output Driver Ⓐ

The 21.4 MHz IF signal goes to the output driver, where it is converted to a 50Ω system (6 dB loss) and sent to A4A6A1.

Analyzer Repair Inc.

Tables 1 through 8 provide information that is useful in troubleshooting the A4A9 IF Control Assembly.

Table 1. 0.0 to -1.9 dB Control Truth Table
(Levels at Output of Latch U20)*

Control Line	Reference Level (dBm)																			
	0.0	−0.1	−0.2	−0.3	−0.4	−0.5	−0.6	−0.7	−0.8	−0.9	−1.0	−1.1	−1.2	−1.3	−1.4	−1.5	−1.6	−1.7	−1.8	−1.9
A.1 dB	H		H		H		H		H		H		H		H		H		H	
A.2 dB			H	H			H	H					H	H			H	H		
A.4 dB			H	H	H	H							H	H	H	H				
A.8 dB	H	H									H	H								
A1 dB	H	H	H	H	H	H	H	H	H	H										

* Latch U11 on early versions of A4A9 IF Control

Table 2.
0 to -9 dB Control Truth Table
(Levels at Output of Latches U18 and U20)*

Reference Level (dBm)	A2 dB	A4 dB	A8 dB
0 (−1)			H
−2 (−3)	H	H	
−4 (−5)		H	
−6 (−7)	H		
−8 (−9)			

* Latches U10 and U11 on early versions of A4A9 IF Control

Table 3. Resolution Bandwidth Truth Table

Resolution Bandwidth	RBW D	RBW C	RBW B	RBW A
3 MHz	H	H	H	H
1 MHz	H	H	H	
300 kHz	H	H		H
100 kHz	H	H		
30 kHz	H		H	H
10 kHz	H		H	
3 kHz	H			H
1 kHz		H	H	

Analyzer Repair Inc.

Table 4. Video Bandwidth Truth Table

Video Bandwidth	VBW D	VBW C	VBW B	VBW A
3 MHz	H	H	H	H
1 MHz	H	H	H	
300 kHz	H	H		H
100 kHz	H	H		
30 kHz	H		H	H
10 kHz	H		H	
3 kHz	H			H
1 kHz		H	H	
300 Hz		H		H
100 Hz		H		
30 Hz			H	H
10 Hz			H	
3 Hz				H
1 Hz				

Table 5. 10 dB Gain Step Truth Table
(Levels at Output of Latches U10 and U17)*

Reference Level All RBWs	dBm	0	−10	−20	−30	−40	−50	−60	−70	−80	−90	−100	−110
A10 dB	Log	H											
	Lin	H											
SG10	Log			H		H		H	H	H	H	H	H
	Lin			H		H		H	H	H	H	n/a	
SG20-1	Log				H	H	H	H	H	H	H	H	H
	Lin				H	H	H	H	H	H	H	n/a	
SG20-2	Log						H	H	H	H	H	H	H
	Lin						H	H	H	H	H	n/a	
OS10	Log								H		H		H
	Lin												
OS20-1	Log	I								H	H	H	H
	Lin												
OS20-2	Log											H	H
	Lin												
LG10	Log												
	Lin								H		H	n/a	
LG20	Log												
	Lin									H	H	n/a	

Input attenuation setting at 0 dB; shift attenuator (for extended ranges).

* Latches U8 and U9 on early version of A4A9 IF Control.

Analyzer Rentals Inc.

Table 6. Bandwidth Control Lines
(All Voltages Approximate)

Resolution Bandwidth	Control Links			
	BW 5	BW 63	BW 68	BW 7
3 MHz	+14.8 V	-14.0 V	-14.0 V	+9.7 V
1 MHz	+14.8 V	-14.0 V	-14.0 V	+13.1 V
300 kHz	+14.8 V	-14.0 V	-14.0 V	+14.1 V
100 kHz	+14.8 V	-14.0 V	-14.0 V	+14.5 V
30 kHz	-0.6 V	+14.3 V	+14.3 V	+14.3 V
10 kHz	-0.6 V	+9.3 V	+9.3 V	+14.3 V
3 kHz	−0.6 V	+9.0 V	+9.0 V	+14.3 V
1 kHz	-0.6 V	+8.4 V	+8.4 V	+14.3 V

Table 7. Address Line Truth Table

Address	ADR 4 (16)	ADR 3 (8)	ADR 2 (4)	ADR 1 (2)	ADR 0 (1)
Address 20	H	L	H	L	L
Address 21	H	L	H	L	H

Table 8. Log Expand Truth Table

dB/DIV	B Log	A Log
10		
5		H
2	H	
1	H	H

Analyzer Repair Inc.

HP Part Number 85662-60172

A4A5 Step Gain

Reference Designation	HP Part Number	CD	Qty	Description	Mfr Code	Mfr Part Number
A4A5	85662-60172	7	1	BOARD ASSEMBLY, STEP GAIN (OPTION 067)	28480	85662-60172
A4A5C3	0160-4832	4	1	CAPACITOR-FXD .01UF +-10% 100VDC CER	04222	SA101C103KAAH
A4A5C4	0180-0197	8	1	CAPACITOR-FXD 2.2UF+-10% 20VDC TA	56289	150D225X9020A2-DYS
A4A5C24	0160-4832	4	1	CAPACITOR-FXD .01UF +-10% 100VDC CER	04222	SA201C223KAAH
A4A5C25	0160-4833	5	1	CAPACITOR-FXD .022UF +-10% 100VDC CER	04222	SA201C223KAAH
A4A5C26	0160-4832	4	1	CAPACITOR-FXD .01UF +-10% 100VDC CER	04222	SA101C103KAAH
A4A5C27	0160-4832	4	1	CAPACITOR-FXD .01UF +-10% 100VDC CER	04222	SA101C103KAAH
A4A5C28	0160-4832	4	1	CAPACITOR-FXD .01UF +-10% 100VDC CER	04222	SA101C103KAAH
A4A5C29	0160-4832	4	1	CAPACITOR-FXD .01UF +-10% 100VDC CER	04222	SA101C103KAAH
A4A5C31	0160-4832	4	1	CAPACITOR-FXD .01UF +-10% 100VDC CER	04222	SA101C103KAAH
A4A5C32	0160-2252	8	1	CAPACITOR-FXD 6.2pF 500 V	52763	
A4A5C33	0160-4832	4	1	CAPACITOR-FXD .01UF +-10% 100VDC CER	04222	SA101C103KAAH
A4A5C34	0160-4832	4	1	CAPACITOR-FXD .01UF +-10% 100VDC CER	04222	SA101C103KAAH
A4A5C35	0160-4832	4	1	CAPACITOR-FXD .01UF +-10% 100VDC CER	04222	SA101C103KAAH
A4A5C36	0160-4832	4	1	CAPACITOR-FXD .01UF +-10% 100VDC CER	04222	SA101C103KAAH
A4A5C37	0160-2244	8	1	CAPACITOR-FXD 3pF 500 V	52763	
A4A5C38	0160-4832	4	1	CAPACITOR-FXD .01UF +-10% 100VDC CER	04222	SA101C103KAAH
A4A5C39	0160-4832	4	1	CAPACITOR-FXD .01UF +-10% 100VDC CER	04222	SA101C103KAAH
A4A5C40	0160-4832	4	1	CAPACITOR-FXD .01UF +-10% 100VDC CER	04222	SA101C103KAAH
A4A5C41	0160-4832	4	1	CAPACITOR-FXD .01UF +-10% 100VDC CER	04222	SA101C103KAAH
A4A5C42	0160-4832	4	1	CAPACITOR-FXD .01UF +-10% 100VDC CER	04222	SA101C103KAAH
A4A5C44	0160-4832	4	1	CAPACITOR-FXD .01UF +-10% 100VDC CER	04222	SA101C103KAAH
A4A5C45	0160-2244	8	1	CAPACITOR-FXD 3pF 500 V	52763	
A4A5C46	0180-0197	8	1	CAPACITOR-FXD 2.2UF+-10% 20VDC TA	56289	150D225X9020A2-DYS
A4A5C47	0160-4832	4	1	CAPACITOR-FXD .01UF +-10% 100VDC CER	04222	SA101C103KAAH
A4A5C48	0160-4832	4	1	CAPACITOR-FXD .01UF +-10% 100VDC CER	04222	SA101C103KAAH
A4A5C49	0160-4832	4	1	CAPACITOR-FXD .01UF +-10% 100VDC CER	04222	SA101C103KAAH
A4A5C50	0160-4832	4	1	CAPACITOR-FXD .01UF +-10% 100VDC CER	04222	SA101C103KAAH
A4A5C51	0160-4832	4	1	CAPACITOR-FXD .01UF +-10% 100VDC CER	04222	SA101C103KAAH
A4A5C52	0160-4832	4	1	CAPACITOR-FXD .01UF +-10% 100VDC CER	04222	SA101C103KAAH
A4A5C53	0160-4832	4	1	CAPACITOR-FXD .01UF +-10% 100VDC CER	04222	SA101C103KAAH
A4A5C54	0160-4832	4	1	CAPACITOR-FXD .01UF +-10% 100VDC CER	04222	SA101C103KAAH
A4A5C55	0160-4832	4	1	CAPACITOR-FXD .01UF +-10% 100VDC CER	04222	SA101C103KAAH
A4A5C56	0160-4832	4	1	CAPACITOR-FXD .01UF +-10% 100VDC CER	04222	SA101C103KAAH
A4A5C57	0160-4832	4	1	CAPACITOR-FXD .01UF +-10% 100VDC CER	04222	SA101C103KAAH
A4A5C58	0160-4832	4	1	CAPACITOR-FXD .01UF +-10% 100VDC CER	04222	SA101C103KAAH
A4A5C59	0160-4832	4	1	CAPACITOR-FXD .01UF +-10% 100VDC CER	04222	SA101C103KAAH
A4A5C61	0160-4832	4	1	CAPACITOR-FXD .01UF +-10% 100VDC CER	04222	SA101C103KAAH
A4A5C62	0160-4832	4	1	CAPACITOR-FXD .01UF +-10% 100VDC CER	04222	SA101C103KAAH
A4A5C63	0160-4832	4	1	CAPACITOR-FXD .01UF +-10% 100VDC CER	04222	SA101C103KAAH
A4A5CR2	1901-0040	1	1	DIODE-SWITCHING 30V 50MA 2NS DO-35	71468	
A4A5CR3	1901-0040	1	1	DIODE-SWITCHING 30V 50MA 2NS DO-35	71468	
A4A5CR4	1901-0040	1	1	DIODE-SWITCHING 30V 50MA 2NS DO-35	71468	
A4A5CR5	1901-1070	9	1	DIODE-PIN 110V	28480	
A4A5CR6	1901-1070	9	1	DIODE-PIN 110V	28480	
A4A5CR7	1901-1070	9	1	DIODE-PIN 110V	28480	
A4A5CR8	1901-1117	5	1	DIODE-SWITCHING 30V	2M627	1SS135

**Indicates factory-selected value*

HP Part Number 85662-60172

A4A5 Step Gain

Reference Designation	HP Part Number	C. D	Qty	Description	Mfr Code	Mfr Part Number
A4A5CR9	1901-1117	5	1	DIODE-SWITCHING 30V	2M627	1SS135
A4A5CR10	1901-1117	5	1	DIODE-SWITCHING 30V	2M627	1SS135
A4A5CR11	1901-1070	9	1	DIODE-PIN 110V	28480	
A4A5E6	9170-0029	3	1	CORE-SHIELDING BEAD	02114	56-590-65A2/4A
A4A5E7	9170-0029	3	1	CORE-SHIELDING BEAD	02114	56-590-65A2/4A
A4A5E8	9170-0029	3	1	CORE-SHIELDING BEAD	02114	56-590-65A2/4A
A4A5E10	9170-0029	3	1	CORE-SHIELDING BEAD	02114	56-590-65A2/4A
A4A5E11	9170-0029	3	1	CORE-SHIELDING BEAD	02114	56-590-65A2/4A
A4A5E12	9170-0029	3	1	CORE-SHIELDING BEAD	02114	56-590-65A2/4A
A4A5E13	9170-0029	3	1	CORE-SHIELDING BEAD	02114	56-590-65A2/4A
A4A5E14	9170-0029	3	1	CORE-SHIELDING BEAD	02114	56-590-65A2/4A
A4A5E15	9170-0029	3	1	CORE-SHIELDING BEAD	02114	56-590-65A2/4A
A4A5E16	9170-0029	3	1	CORE-SHIELDING BEAD	02114	56-590-65A2/4A
A4A5L2	9140-0158	6	1	INDUCTOR RF-CH-MLD 1UH +-10% .105D-INX.2	32159	1A1002M +-10%
A4A5L3	9100-1618	1	1	INDUCTOR RF-CH-MLD 5.6UH +-10% .166D-INX	99800	1537-30
A4A5L4	9100-1618	1	1	INDUCTOR RF-CH-MLD 5.6UH +-10% .166D-INX	99800	1537-30
A4A5L6	9100-1618	1	1	INDUCTOR RF-CH-ML0 5.6UH +-10% .166D-INX	99800	1537-30
A4A5L10	9100-1624	9	1	INDUCTOR RF-CH-MLD 30UH +-5% .166D-INX.3	99800	1537-50
A4A5L11	9100-1624	9	1	INDUCTOR RF-CH-MLD 30UH +-5% .166D-INX.3	99800	1537-50
A4A5L12	9100-1624	9	1	INDUCTOR RF-CH-MLD 30UH +-5% .166D-INX.3	99800	1537-50
A4A5L13	9100-1624	9	1	INDUCTOR RF-CH-MLD 3DUH +-5% .166D-INX.3	99800	1537-50
A4A5L14	9100-1624	9	1	INDUCTOR RF-CH-MLD 30UH +-5% .166D-INX.3	99800	1537-50
A4A5MP1	6960-0016	0	1	PLUG-HOLE TR-HD FOR .125-D-HOLE NYL	02768	207-080501-01-0101
A4A5MP2	85662-20148	3	1	COVER STEP GAIN	28480	85662-20148
A4A5MP3	86701-40001	9	1	EXTRACTOR PC	28480	86701-40001
A4A5MP4				NOT ASSIGNED		
A4A5MP5	2200-0101	0	1	SCREW-MACH 4-40 .188-IN-LG PAN-HD-POZI	77250	
A4A5Q1	1854-0345	8	1	TRANSISTOR NPN 2N5179 SI TO-72 PD=200MW	04713	2N5179
A4A5Q2	1853-0015	7	1	TRANSISTOR PNP SI PD=200MW FT=500MHZ	04713	
A4A5Q3	1854-0345	8	1	TRANSISTOR NPN 215179 SI TO-72 PD=200MW	04713	215179
A4A5Q4	1853-0015	7	1	TRANSISTOR PNP SI PD=200MW FT=500MHZ	04713	
A4A5Q5	1854-0345	8	1	TRANSISTOR NPN 215179 SI TO-72 PD=200MW	04713	2N5179
A4A5Q6	1853-0015	7	1	TRANSISTOR PNP SI PD=200MW FT=500MHZ	04713	
A4A5Q7	1854-0404	0	1	TRANSISTOR NPN SI TO-18 PD=360MW	04713	
A4A5Q14	1854-0994	3	1	TRANSISTOR NPN SI TO-72 PD=200MW	04713	2N5179(SEL)
A4A5Q15	1854-0994	3	1	TRANSISTOR NPN SI TO-72 PD=200MW	04713	2N5179(SEL)
A4A5Q16	1854-0019	3	1	TRANSISTOR NPN SI TO-18 PD=360MW	04713	
A4A5Q17	1854-0994	3	1	TRANSISTOR NPN SI TO-72 PD=200MW	04713	2N5179(SEL)
A4A5R1	0698-0084	9	1	RESISTOR 2.15K 1% .125W TF TC=0+-100	19701	SFR25H
A4A5R2	2100-3103	6	1	RESISTOR-TRMR 10K 10% TKF SIDE-ADJ 17-TR	73138	89PR10K
A4A5R3	0757-0440	7	1	RESISTOR 7.5K +-1% .125W TF TC=0+-100	19701	SFR25H
A4A5R4	0757-0458	7	1	RESISTOR 51.1K +-1% .125W TF TC=0+-100	19701	SFR25H
A4A5R5	0757-0288	1	1	RESISTOR 9.09K +-1% .125W TF TC=0+-100	19701	SFR25H
A4A5R27	0757-0290	5	1	RESISTOR 6.19K +-1% .125W TF TC=0+-100	19701	SFR25H
A4A5R28	0698-3444	1	1	RESISTOR 316 1% .125W TF TC=0+-100	19701	SFR25H
A4A5R29	0757-0276	7	1	RESISTOR 61.9 +-1% .125W TF TC=0+-100	19701	SFR25H
A4A5R31	0757-0280	3	1	RESISTOR 1K +-1% .125W TF TC=0+-100	19701	SFR25H
A4A5R32	3356	1	1	RESISTOR-TRMR 5K 10% TKF SIDE-ADJ 17-TRN	73138	89PR5K

Indicates facto y-selected value

HP Part Number 85662-60172

A4A5 Step Gain

Reference Designatior	HP Part Number	C D	Qty	Description	Mfr Code	Mfr Part Number
A4A5R33	2100-3163	8	1	RESISTOR-TRMR 1M 20% TKF SIDE-ADJ 17-TRI	73131	89PR1M
A4A5R34	0757-0465	6	1	RESISTOR 100K +-1% .125W TF TC=0+-100	1970:	SFR25H
A4A5R35	0698-3132	4	1	RESISTOR 261 1% .125W TF TC=0+-100	1970:	SFR25H
A4A5R36	0757-0280	3	1	RESISTOR 1K +-1% .125W TF TC=0+-100	1970:	SFR25H
A4A5R37	0757-0276	7	1	RESISTOR 61.9 +-1% .125W TF TC=0+-100	1970:	SFR25H
A4A5R38	0757-0401	(	1	RESISTOR 100 +-1% .125W TF TC=0+-100	1970:	SFR25H
A4A5R39	0757-0290	5	1	RESISTOR 6.19K +-1% .125W TF TC=0+-100	19701	SFR25H
A4A5R40	0698-3444	1	1	RESISTOR 316 1% .125W TF TC=0+-100	19701	SFR25H
A4A5R41	0698-4037	C	1	RESISTOR 46.4 1% .125W TF TC=0+-100	19701	SFR25H
A4A5R42	0698-3260	9	1	RESISTOR 464K 1% .125W TF TC=0+-100	19701	SFR25H
A4A5R43	0757-0280	3	1	RESISTOR 1K +-1% .125W TF TC=0+-100	19701	SFR25H
A4A5R44	2100-3056	8	1	RESISTOR-TRMR 5K 10% TKF SIDE-ADJ 17-TRN	73138	89PR5K
A4A5R45	0757-0280	3	1	RESISTOR 1K +-1% .125W TF TC=0+-100	19701	SFR25H
A4A5R46	0757-0420	3	1	RESISTOR 750 +-1% .125W TF TC=0+-100	19701	SFR25H
A4A5R47	0757-0276	7	1	RESISTOR 61.9 +-1% .125W TF TC=0+-100	19701	SFR25H
A4A5R48	0698-4037	C	1	RESISTOR 46.4 1% .125W TF TC=0+-100	19701	SFR25H
A4A5R49	3757-0290	5	1	RESISTOR 6.19K +-1% .125W TF TC=0+-100	19701	SFR25H
A4A5R50	3698-3444	1	1	RESISTOR 316 1% .125W TF TC=0+-100	19701	SFR25H
A4A5R51	2100-3161	6	1	RESISTOR-TRMR 20K 10% TKF SIDE-ADJ 17-TR	73138	89PR20K
A4A5R52	3698-3260	9	1	ZESISTOR 464K 1% .125W TF TC=0+-100	19701	SFR25H
A4A5R53	3757-0280	3	1	ZESISTOR 1K +-1% .125W TF TC=0+-100	19701	SFR25H
A4A5R54	2100-3056	8	1	IESISTOR-TRMR 5K 10% TKF SIDE-ADJ 17-TRN	73138	89PR5K
A4A5R55	1757-0420	3	1	RESISTOR 750 +-1% .125W TF TC=0+-100	19701	SFR25H
A4A5R56	1757-0280	3	1	RESISTOR 1K +-1% .125W TF TC=0+-100	19701	SFR25H
A4A5R59	1698-0084	9	1	RESISTOR 2.15K 1% .125W TF TC=0+-100	19701	SFR25H
A4A5R60	1698-3260	9	1	RESISTOR 464K 1% .125W TF TC=0+-100	19701	SFR25H
A4A5R61	)757-0403	2	1	RESISTOR 121 +-1% .125W TF TC=0+-100	19701	SFR25H
A4A5R62*	)698-0083	B	1	RESISTOR 1.96K 1% .125W TF TC=0+-100	19701	SFR25H
A4A5R63	)757-0398	4	1	LESISTOR 75 +-1% .125W TF TC=0+-100	19701	SFR25H
A4A5R64	)757-0280	3	1	RESISTOR 1K +-1% .125W TF TC=0+-100	19701	SFR25H
A4A5R65	)757-0442	3	1	RESISTOR 10K +-1% .125W TF TC=0+-100	19701	SFR25H
A4A5R66	)757-0442	3	1	RESISTOR 10K +-1% .125W TF TC=0+-100	19701	SFR25H
A4A5R67	)698-0084	3	1	RESISTOR 2.15K 1% .125W TF TC=0+-100	19701	SFR25H
A4A5R68	1698-3260	3	1	RESISTOR 464K 1% .125W TF TC=0+-100	19701	SFR25H
A4A5R69	)757-0395	1	1	RESISTOR 56.2 +-1% .125W TF TC=0+-100	19701	SFR25H
A4A5R70*	)757-0419	3	1	RESISTOR 681 +-1% .125W TF TC=0+-100	19701	SFR25H
A4A5R71	1757-0401	3	1	RESISTOR 100 +-1% .125W TF TC=0+-100	19701	SFR25H
A4A5R80	)757-0280	3	1	RESISTOR 1K +-1% .125W TF TC=0+-100	19701	SFR25H
A4A5R83	)698-0084	3	1	RESISTOR 2.15K 1% .125W TF TC=0+-100	19701	SFR25H
A4A5R84	1698-3260	3	1	RESISTOR 464K 1% .125W TF TC=0+-100	19701	SFR25H
A4A5R85	1698-3435	3	1	RESISTOR 38.3 1% .125W TF TC=0+-100	19701	SFR25H
A4A5R86*	1698-3443	3	1	RESISTOR 287 1% .125W TF TC=0+-100	19701	SFR25H
A4A5R87	1698-3438	3	1	RESISTOR 147 1% .125W TF TC=0+-100	19701	SFR25H
A4A5R88	)757-0317	7	1	RESISTOR 1.33K +-1% .125W TF TC=0+-100	19701	SFR25H
A4A5R89	)757-0280	3	1	RESISTOR 1K +-1% .125W TF TC=0+-100	19701	SFR25H
A4A5R90	)757-0442	3	1	RESISTOR 10K +-1% .125W TF TC=0+-100	19701	SFR25H
A4A5R91	)757-0280	3	1	RESISTOR 1K +-1% .125W TF TC=0+-100	19701	SFR25H

**Indicates factory-selected value*

HP Part Number 85662-60172

A4A5 Step Gain

Reference Designatior	HP Part Number	C D	Qty	Description	Mfr Code	Mfr Part Number
A4A5R93	0757-0180	2	1	RESISTOR 31.6 +-1% .125W TF TC=0+-100	1970:	SFR25H
A4A5R96	0757-0401	0	1	RESISTOR 100 +-1% .125W TF TC=0+-100	1970:	SFR25H
A4A5R97	0757-0346	2	1	RESISTOR 10 +-1% .125W TF TC=0+-100	9163;	CMF-55-1, T-1
A4A5TP1	1251-0600	0	1	CONNECTOR-SGL CONT PIN 1.14-MM-BSC-SZ SC	2726⁴	16-06-0034
A4A5TP2	1251-0600	0	1	CONNECTOR-SGL CONT PIN 1.14-MM-BSC-SZ SC	2726⁴	16-06-0034
A4A5U1	1826-1058	3	1	IC OP AMP GP 8-TO-99 PKG	0666!	OP-02CJ
A4A5VR1	1902-3104	6	1	DIODE-ZNR 5.62V 5% DO-35 PD=.4W	0471:	

Analyzer Repair Inc.

**Indicates factory-selected value*

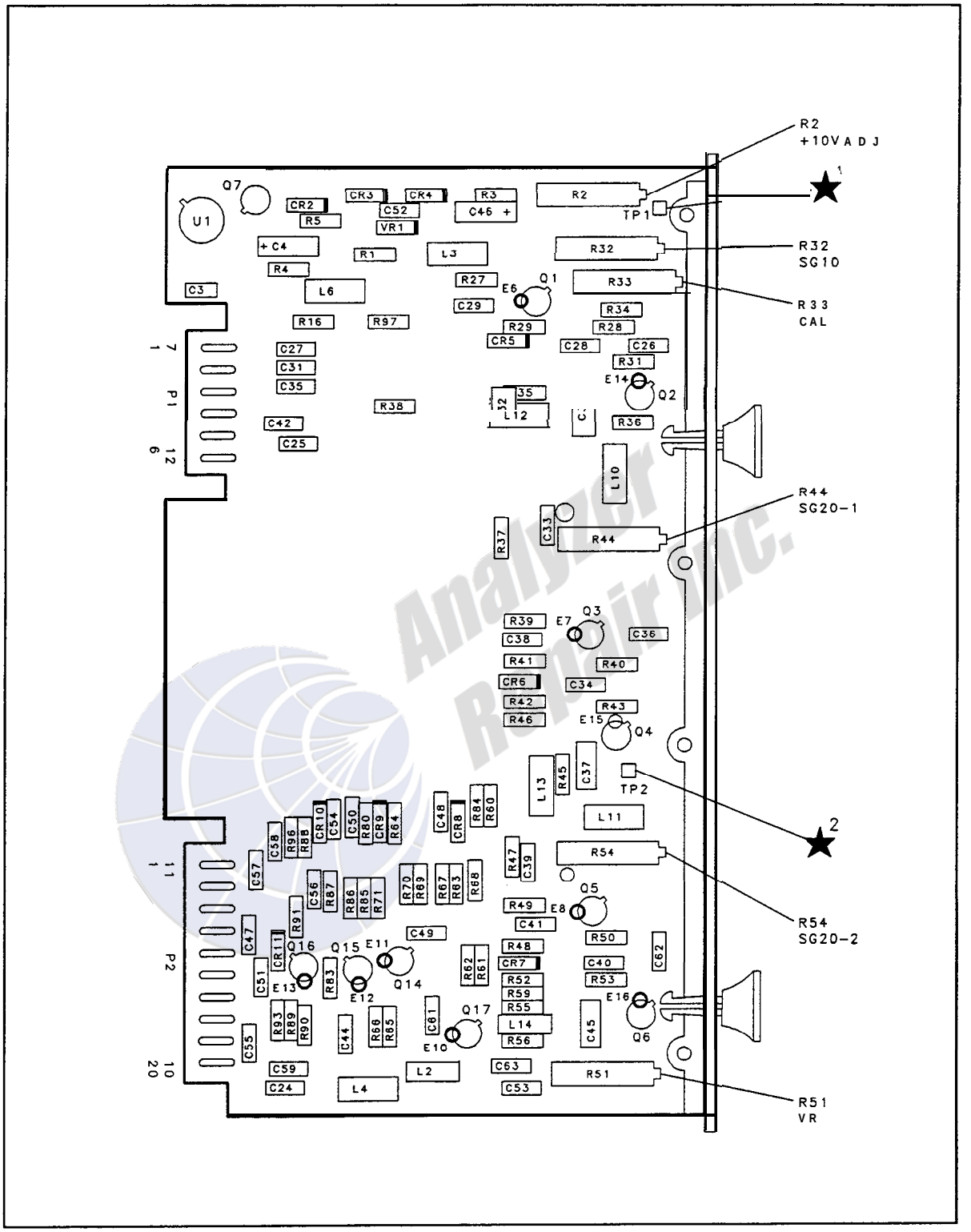

A4A5 Step Gain Component Locations, 85662-60172

(Option 067 Tab)

A4A5 STEP GAIN
85662-60172 (OPTION 067)
(SERIAL PREFIX: 2542A)

P1

PIN	SIGNAL	TO/FROM	FUNCTION BLOCK
1	GND	A4A6A1P1-1	G
7	21.4 MHz		C
2	GND	A4A9P1-10	G
8	SG10		C
3	GND	A4A9P1-9	G
9	SG20-1		D
4	GND	A4A9P1-8	G
10	SG20-2		E
5	+10V	A4A4P1-11, A4A9P1-6	G
11	SWITCH	A4A9P1-11	NC
6	GND	A4A6A1P1-6	G
12	18.4 MHz LO		NC

P2

PIN	SIGNAL	TO/FROM	FUNCTION BLOCK
1	GND	A1A1W1-2	G
11	FREQ ZERO		NC
2	GND	A4A6A2P1-1	G
12	18.4 MHz LO		NC
3	GND	A4A9P2-7	G
13	AV dB		F
4	GND		G
14	GND		G
5	GND	A4A9P2-5	G
15	A8 dB		F
6	GND	A4A9P2-4	G
16	A4 dB		F
7	GND	A4A9P2-22	G
17	A2 dB		F
8	GND		G
18	-15V		G
9	GND		G
19	+15V		G
10	21.4 MHz	A4A4P2-12	F
20	GND		G

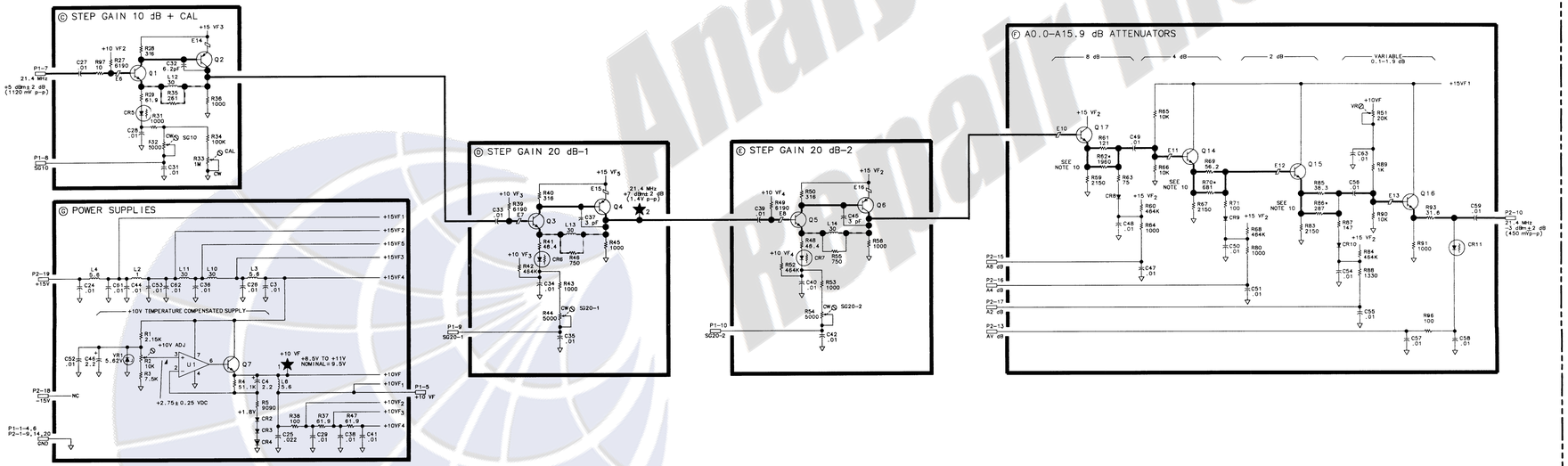

NOTES:

1. REFERENCE DESIGNATORS WITHIN THIS ASSEMBLY ARE ABBREVIATED. FOR COMPLETE REFERENCE DESIGNATION, PREFIX ABBREVIATION WITH ASSEMBLY DESIGNATION, A4.
2. UNLESS OTHERWISE INDICATED: RESISTANCE IS IN OHMS (Ω) CAPACITANCE IS IN MICROFARADS(μF) INDUCTANCE IS IN MICROHENRIES(μH)
3. ASTERISK (*) DENOTES FACTORY SELECTED COMPONENT. TYPICAL VALUE IS SHOWN. REFER TO NOTE 10 FOR RANGE OF VALUES.
4. MNEMONIC TABLE:

MNEMONIC	DESCRIPTION
A2 dB	ATTENUATION 2 dB
A4 dB	ATTENUATION 4 dB
A8 dB	ATTENUATION 8 dB
AV dB	ATTENUATION VARIABLE
FREQ ZERO	FREQUENCY ZERO FROM FRONT PANEL CONTROL
SG10	STEP GAIN 10 dB
SG20-1	STEP GAIN 20 dB-1
SG20-2	STEP GAIN 20 dB-2
SWITCH	LINE POWER CONVERTING (3 MHz IF)

5. RF PERFORMANCE OF THIS BOARD IS ADVERSELY AFFECTED BY USE OF EXTENDERS. SEE TROUBLESHOOTING HINTS FOR INFORMATION ON REPAIR OF THIS BOARD.
6. INSTRUMENT CONTROL SETTINGS FOR ALL MEASUREMENTS ON THIS BOARD ARE AS FOLLOWS:

INSTRUMENT PRESET	
CENTER FREQUENCY	CAL. OUT FREQ.
FREQUENCY SPAN	0 Hz
ATTENUATION	0 dB

7. STEP GAIN TRUTH TABLE: (INPUT ATTEN SET AT 0)

REF. LEVEL (- RF ATTEN)	dBm	-10	-20	-30	-40	-50	≤ -60
SG10	LOG	>7.5V	0V	>7.5V	0V	>7.5V	0V
SG20-1	LOG	>8.5V	>8.5V	0V	0V	0V	0V
SG20-2	LOG	>8.5V	>8.5V	>8.5V	0V	0V	0V

8. A0.0 - 15.9 dB ATTENUATOR CONTROL TABLE:

REF. LEVEL dBm	CONTROL LINES A2 dB	A4 Db	A8 Db
-10	>+13V	>+13V	0V
-11	>+13V	>+13V	0V
-12	0V	0V	>+13V
-13	0V	0V	>+13V
-14	>+13V	0V	>+13V
-15	>+13V	0V	>+13V
-16	0V	0V	>+13V
-17	0V	>+13V	>+13V
-18	>+13V	>+13V	>+13V
-19	>+13V	>+13V	>+13V

9. UNLESS OTHERWISE INDICATED: SIGNALS ENTER AT LEFT SIDE AND EXIT AT RIGHT SIDE OF FUNCTION BLOCKS.
10. R62*, R70*, AND R86* ARE FACTORY-SELECTED COMPONENTS. A RANGE OF ACCEPTABLE VALUES FOR EACH IS LISTED BELOW.

COMPONENT	ACCEPTABLE VALUE
R62*	13300 - 34800
R70*	4720 - 16200
R86*	2150 - OPEN

Analyzer Repair Inc.

HP Part Number 85662-60177

A4A6 Buffer

Reference Designation	HP Part Number	C D	Qty	Description	Mfr Code	tvlfr Part Number
A4A6	85662-60177	2	1	BOARD ASSEMBLY, BUFFER (OPTION 067)	28480	85662-60177
A4A6A1	85662-60171	6	1	BOARD ASSEMBLY, INPUT BUFFER	28480	85662-60171
A4A6A2	85662-60170	5	1	BOARD ASSEMBLY, OUTPUT DRIVER	28480	85662-60170
A4A6J1	1250-2112	1	1	CONNECTOR-RF SMB M SGL-HOLE-FR 50-OHM	98291	051-047-0259-220
A4A6J2	1250-2112	I	1	CONNECTOR-RF SMB M SGL-HOLE-FR 50-OHM	98291	051-047-0259-220
A4A6MP1	2190-0557	7	2	WASHER-LK INTL T NO. 10 .195-IN-ID	78189	1210-06-00-0551
A4A6MP2	2200-0101	c	4	SCREW-MACH 4-40 .188-IN-LG PAN-HD-POZI	77250	
A4A6MP3	2950-0078	9	2	NUT-HEX-DBL-CHAM 10-32-THD .067-IN-THK	74163	500220
A4A6MP4	85662-20039	I	1	COVER, DOWN/UP CONVERTER	28480	85662-20039
A4A6MP5	86701-40001	9	2	EXTRACTOR PC	28480	86701-40001
A4A6MP6	6960-0016	0	2	PLUG-HOLE TR-HD FOR .125-D-HOLE NYL	02768	207-080501-01-0101

Analyzer Repair Inc.

**Indicates factory-selected value*

HP Part Number 85662-60170

A4A6A2 Output Driver

Reference Designation	HP Part Number	CD	Qty	Description	Mfr Code	Mfr Part Number
A4A6A2	85662-60170	5	1	BOARD ASSEMBLY, OUTPUT DRIVER (OPTION 067)	28480	85662-60170
A4A6A2C2	0160-2055	9	1	CAPACITOR-FXD .01UF +80-20% 100VDC CER		805-504 Y5V 103Z
A4A6A2C18	0160-4084	8	1	CAP-FXD 0.1uF 50 V	56289	1C20X7R104M050B
A4A6A2C23	0160-2055	9	1	CAPACITOR-FXD .01UF +BO-20% 100VDC CER		805-504 Y5V 103Z
A4A6A2C28	0160-2055	9	1	CAPACITOR-FXD .01UF +80-20% 100VDC CER		805-504 Y5V 103Z
A4A6A2C29	0160-2055	9	1	CAPACITOR-FXD .01UF +80-20% 100VDC CER		805-504 Y5V 103Z
A4A6A2E1	9170-0029	3	1	CORE-SHIELDING BEAD	02114	56-590-65A2/4A
A4A6A2E5	1258-0124	7	1	SHUNT-PROGRAMMABLE 1 DBL PIN SET .100	91506	8136-47561
A4A6A2L8	9140-0112	2	1	INDUCTOR RF-CH-MLD 4.7UH +-10% .166D-INX	99800	1537-28
A4A6A2Q3	1854-0019	3	1	TRANSISTOR NPN SI TO-18 PD=360MW	04713	
A4A6A2R24	0757-0405	4	1	RESISTOR 162 +-1% .125W TF TC=0+-100	19701	SFR25H
A4A6A2R39	0757-0279	0	1	RESISTOR 3.16K +-1% .125W TF TC=0+-100	19701	SFR25H
A4A6A2R40	0757-0442	9	1	RESISTOR 10K +-1% .125W TF TC=0+-100	19701	SFR25H
A4A6A2R41	0757-0394	0	1	RESISTOR 51.1 +-1% .125W TF TC=D+-100	19701	SFR25H
A4A6A2R42	0757-0418	9	1	RESISTOR 619 +-1% .125W TF TC=0+-100	19701	SFR25H
A4A6A2W1	8151-0013	4	1	WIRE 22AWG 1X22	92194	298

Analyzer Repair Inc.

**Indicates factory-selected value*

HP Part Number 85662-60171

A4A6A1 Input Buffer

Reference Designatior	HP Part Number	C D	Qty	Description	Mfr Code	Mfr Part Number
A4A6A1	85662-60171	4	1	BOARD ASSEMBLY, INPUT BUFFER (OPTION 067)	2848(	85662-60171
A4A6A1C4	0160-4084	8	1	CAP-FXD 0.1uF 50 V	56282	1C20X7R104M050B
A4A6A1C11	0160-2055	,	1	CAPACITOR-FXD .01UF +80-20% 100VDC CER		805-504 Y5V 103Z
A4A6A1C22	0160-2055	9	1	CAPACITOR-FXD .01UF +80-20% 100VDC CER		805-504 Y5V 103Z
A4A6A1C24	0160-2055	9	1	CAPACITOR-FXD .01UF +80-20% 100VDC CER		805-504 Y5V 103Z
A4A6A1C25	0160-2055	9	1	CAPACITOR-FXD .01UF +80-20% 100VDC CER		805-504 Y5V 103Z
A4A6A1C26	0160-2055	9	1	CAPACITOR-FXD .01UF +80-20% 100VDC CER		805-504 Y5V 103Z
A4A6A1C27	0160-2244	8	1	CAP-FXD 3pF 500 V	52763	
A4A6A1E2	9170-0029	.	1	CORE-SHIELDING BEAD	02114	56-590-65A2/4A
A4A6A1E3	9170-0029	.	1	CORE-SHIELDING BEAD	02114	56-590-65A2/4A
A4A6A1L1	9140-0112	2	1	INDUCTOR RF-CH-MLD 4.7UH +-10% .166D-IN)	99800	1537-28
A4A6A1Q2	1853-0007	7	1	TRANSISTOR PNP 2N3251 SI TO-18 PD=360MW	04713	213251
A4A6A1Q3	1854-0345	E	1	TRANSISTOR NPN 2N5179 SI TO-72 PD=200MW	04713	215179
A4A6A1R1	0757-0401	C	1	RESISTOR 100 +-1% .125W TF TC=0+-100	19701	SFR25H
A4A6A1R26	0757-0394	C	1	RESISTOR 51.1 +-1% .125W TF TC=0+-100	19701	SFR25H
A4A6A1R27	0757-0439	4	1	RESISTOR 6.81K +-1% .125W TF TC=0+-100	19701	SFR25H
A4A6A1R28	0757-0442	3	1	RESISTOR 10K +-1% .125W TF TC=0+-100	19701	SFR25H
A4A6A1R29*	0698-3441	3	1	RESISTOR 215 1% .125W TF TC=0+-100	19701	SFR25H
A4A6A1R30	0698-3439	1	1	RESISTOR 178 1% .125W TF TC=0+-100	19701	SFR25H
A4A6A1R32	0757-0419	D	1	RESISTOR 681 +-1% .125W TF TC=0+-100	19701	SFR25H
A4A6A1R33	0757-0346	2	1	RESISTOR 10 +-1% .125W TF TC=0+-100	91637	CMF-55-1, T-1
A4A6A1R35	3698-3444	L	1	RESISTOR 316 1% .125W TF TC=0+-100	19701	SFR25H
A4A6A1W1	3151-0013	1	1	JIRE 22AWG 1X22	92194	298

Indicates factory-selected value

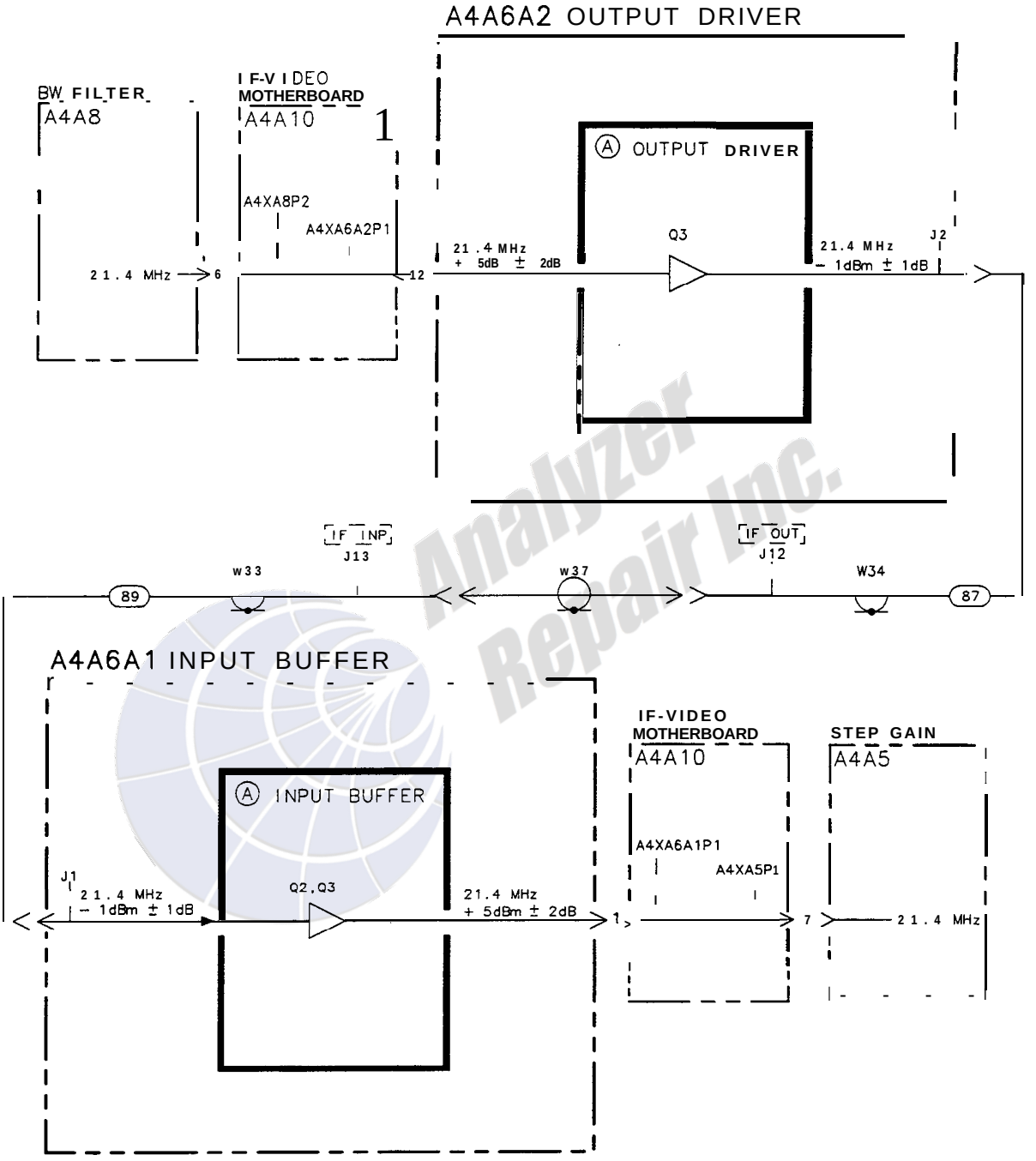

A4A6A2 Output Driver and A4A6A1 Input Buffer *(Opt 067)*, Block Diagram

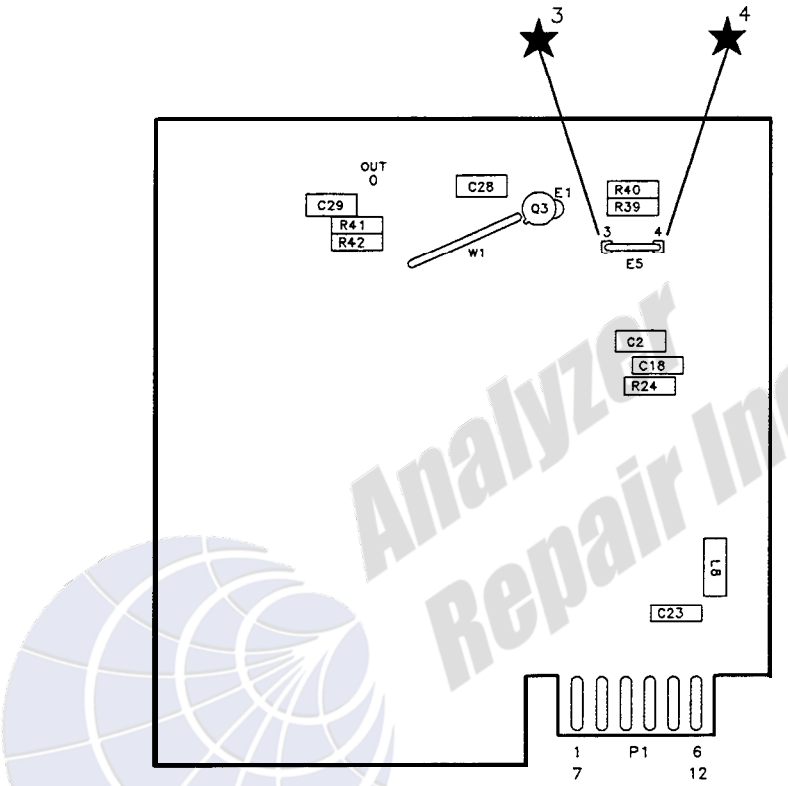

A4A6A2 Output Driver Component Locations, 85662-60170

(Option 067 Tab)

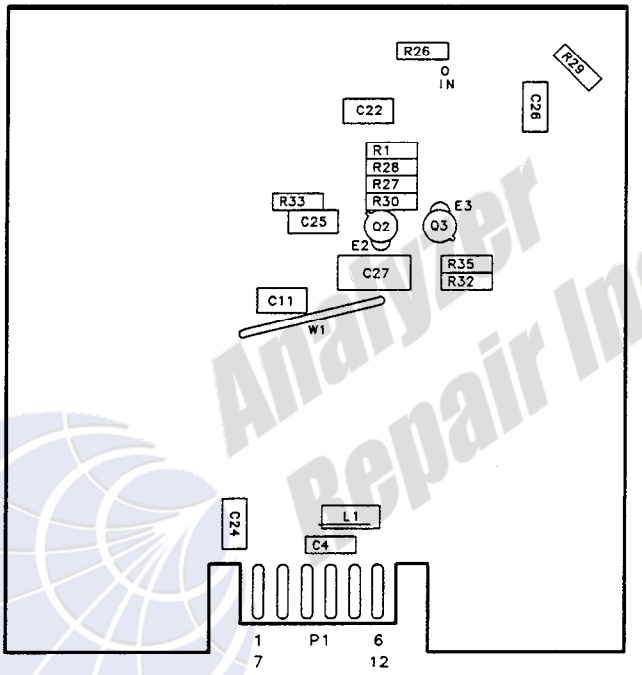

A4A6A1 Input Buffer Component Locations, 85662-60171

(Option 067 Tab)

A4A6 BUFFER BOARD
85662-60177 (OPTION 067)
(SERIAL PREFIX: 2542A)

A4A6A2 OUTPUT DRIVER
85662-60170

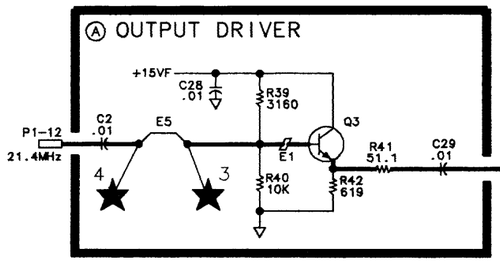

CABLE 87, W34
21.4 MHz
-1 dBM ±1dB
TO A4A6A1
INPUT BUFFER

J2 — 87 — W34 — (IF OUT) J12 — W37 — (IF IN) J13 — W33 — 89

P1

PIN	SIGNAL	TO/FROM	FUNCTION BLOCK
1	18.4MHz LO	A4A5P2-12	NC
7	SWITCH	A4A10	NC
2	GND		F
8	GND		F
3	GND		F
9	3MHz	A4A7P2-3	NC
4	GND		F
10	-15V		NC
5	GND		F
11	+15V		F
6	GND		F
12	21.4MHz	A4A8P2-6	A

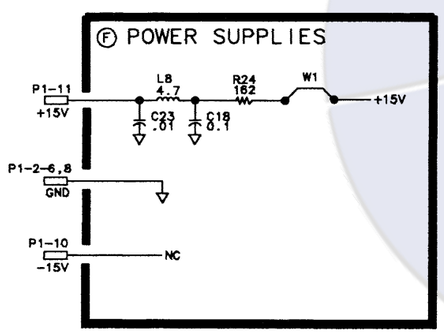

A4A6A1 INPUT BUFFER
85662-60171

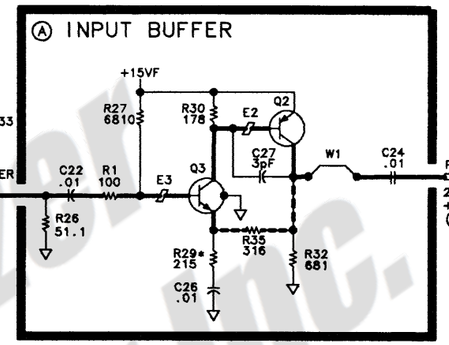

J1 — CABLE 89, W33
21.4 MHz
-1 dBM ±1dB
TO A4A6A2
OUTPUT DRIVER

P1

PIN	SIGNAL	TO/FROM	FUNCTION BLOCK
1	21.4MHz	A4A5P1-7	A
7	GND		F
2	GND		F
8	GND		F
3	GND		F
9	3MHz	A4A7P1-3	NC
4	GND		F
10	GND		F
5	GND		F
11	SWITCH	A4A10	NC
6	18.4MHz LO	A4A5P1-12	NC
12	+15V		F

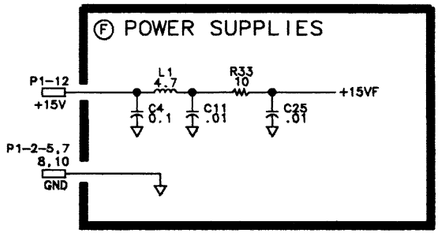

NOTES:

1. REFERENCE DESIGNATORS WITHIN THIS ASSEMBLY ARE ABBREVIATED. FOR COMPLETE REFERENCE DESIGNATION, PREFIX ABBREVIATION WITH ASSEMBLY DESIGNATION.
2. UNLESS OTHERWISE INDICATED:
   RESISTANCE IS IN OHMS (Ω)
   CAPACITANCE IS IN MICROFARADS(μF)
   INDUCTANCE IS IN MICROHENRIES(μH)
3. A4A6A1R29* IS A FACTORY-SELECTED ACCEPTABLE VALUES RANGE FROM 10Ω TO 100Ω.
4. UNLESS OTHERWISE NOTED INSTRUMENT SETTINGS ARE AS FOLLOWS:

INSTRUMENT PRESET	
CENTER FREQUENCY	CAL. OUT FREQ.
FREQUENCY SPAN	0 Hz
ATTENUATION	0 dB

5. ALL MEASURMENTS ARE WITH BOARDS ON EXTENDERS. POWER LEVELS MAY VARY ±2dB UNLESS OTHERWISE INDICATED. RF VOLTAGES MAY VARY ±25%.
6. UNLESS OTHERWISE INDICATED: SIGNALS ENTER AT LEFT SIDE OR TOP AND EXIT AT RIGHT OR BOTTOM SIDE OF FUNCTION BLOCKS.
7. POWER MEASURMENTS ARE TAKEN WITH A SPECTRUM ANALYZER USING A HIGH IMPEDANCE PROBE.

Analyzer Repair Inc.

HP Part Number 85662-60169

A4A9 IF Control

Reference Designatior	HP Part Number	CD	Qty	Description	Mfr Code	Mfr Part Number
A4A9	85662-6016s		1	BOARD ASSEMBLY. IF CONTROL (OPTION 067) (SERIAL PREFIXES: 2542A-2810A)	2848(	85662-60169
A4A9C1	0180-0197		1	CAPACITOR-FXD 2.2UF+-10% 20VDC TA	56282	150D225X9020A2-DYS
A4A9C2	0180-0197		1	CAPACITOR-FXD 2.2UF+-10% 20VDC TA	5628(	150D225X9020A2-DYS
A4A9C3	0180-0197		1	CAPACITOR-FXD 2.2UF+-10% 20VDC TA	5628(	150D225X9020A2-DYS
A4A9C6	0160-4832		1	CAPACITOR-FXD .01UF +-10% 100VDC CER	04222	SA101C103KAAH
A4A9C12	0160-4832		1	CAPACITOR-FXD .01UF +-10% 100VDC CER	04222	SA101C103KAAH
A4A9C13	0160-4832		1	CAPACITOR-FXD .01UF +-10% 100VDC CER	04222	SA101C103KAAH
A4A9C14	0160-4832		1	CAPACITOR-FXD .01UF +-10% 100VDC CER	04222	SA101C103KAAH
A4A9C15	0160-4832		1	CAPACITOR-FXD .01UF +-10% 100VDC CER	04222	SA101C103KAAH
A4A9C16	0160-4832		1	CAPACITOR-FXD .01UF +-10% 100VDC CER	04222	SA101C103KAAH
A4A9C17	0160-4832		1	CAPACITOR-FXD .01UF +-10% 100VDC CER	04222	SA101C103KAAH
A4A9C18	0160-4832		1	CAPACITOR-FXD .01UF +-10% 100VDC CER	04222	SA101C103KAAH
A4A9C19	0160-4832		1	CAPACITOR-FXD .01UF +-10% 100VDC CER	04222	SA101C103KAAH
A4A9C20	0160-4832		1	CAPACITOR-FXD .01UF +-10% 100VDC CER	04222	SA101C103KAAH
A4A9C21	0160-4832		1	CAPACITOR-FXD .01UF +-10% 100VDC CER	04222	SA101C103KAAH
A4A9C22	0160-4832		1	CAPACITOR-FXD .01UF +-10% 100VDC CER	04222	SA101C103KAAH
A4A9C23	0160-4832		1	CAPACITOR-FXD .01UF +-10% 100VDC CER	04222	SA101C103KAAH
A4A9C24	0160-4832		1	CAPACITOR-FXD .01UF +-10% 100VDC CER	04222	SA101C103KAAH
A4A9CR4	1901-0050		1	DIODE-SWITCHING 80V 200MA 2NS DO-35	9N171	1N4150
A4A9CR5	1901-0050		1	DIODE-SWITCHING 80V 200MA 2NS DO-35	9N171	1N4150
A4A9CR8	1901-0050		1	DIODE-SWITCHING 80V 200MA 2NS DO-35	9N171	1N4150
A4A9CR9	1901-0050		1	DIODE-SWITCHING 80V 200MA 2NS DO-35	9N171	1N4150
A4A9CR10	1901-0050		1	DIODE-SWITCHING 80V 200MA 2NS DO-35	9N171	1N4150
A4A9CR11	1901-0040		1	DIODE-SWITCHING 3DV 50MA 2NS DO-35	71468	
A4A9CR12	1901-0040		1	DIODE-SWITCHING 3DV 50MA 2NS DO-35	71468	
A4A9CR13	1901-0040		1	DIODE-SWITCHING 30V 50MA 2NS DO-35	71468	
A4A9CR14	1901-0040		1	DIODE-SWITCHING 30V 5DMA 2NS DO-35	71468	
A4A9CR15	1901-0040		1	DIODE-SWITCHING 30V 50MA 2NS DO-35	71468	
A4A9CR16	1910-0016		1	JIODE-GE 6DV 6DMA 1US DO-7		
A4A9CR17	1910-0016		1	)IODE-GE 60V 60MA 1US DO-7		
A4A9CR18	1901-0040		1	IIODE-SWITCHING 30V 50MA 2NS DO-35	71468	
A4A9CR19	1901-0040		1	)IODE-SWITCHING 30V 50MA 2NS DO-35	71468	
A4A9CR21	1901-0050		1	IIODE-SWITCHING 80V 200MA 2NS DO-35	9N171	1N4150
A4A9CR22	1901-0040		1	)IODE-SWITCHING 30V 50MA 2NS DO-35	71468	
A4A9Q1	1854-0477		1	TRANSISTOR NPN 2N2222A SI TO-18 PD=500MW	04713	2N2222A
A4A9Q2	1853-0281		1	TRANSISTOR PNP 2N2907A SI TO-18 PD=400MW	04713	2N2907A
A4A9Q3	1853-0281		1	TRANSISTOR PNP 2N2907A SI TO-18 PD=400MW	04713	2N2907A
A4A9Q6	1854-0404		1	TRANSISTOR NPN SI TO-18 PD=360MW	04713	
A4A9Q8	1854-0404		1	TRANSISTOR NPN SI TO-18 PD=360MW	04713	
A4A9Q9	1854-0404		1	TRANSISTOR NPN SI TO-18 PD=360MW	04713	
A4A9Q10	1854-0404		1	TRANSISTOR NPN SI TO-18 PD=360MW	04713	
A4A9Q20	1853-0281		1	TRANSISTOR PNP 2N2907A SI TO-18 PD=400MW	04713	2N2907A
A4A9Q21	1853-0281		1	TRANSISTOR PNP 2N2907A SI TO-18 PD=400MW	04713	2N2907A
A4A9R1	0757-0442		1	RESISTOR 10K +-1% .125W TF TC=0+-100	19701	SFR25H
A4A9R2	0757-0442		1	RESISTOR 10K +-1% .125W TF TC=0+-100	19701	SFR25H
A4A9R4	0757-0442		1	RESISTOR 10K +-1% .125W TF TC=0+-100	19701	SFR25H

**Indicates factory-selected value*

HP Part Number 85662-60169

A4A9 IF Control

Reference Designation	HP Part Number	CD	Qty	Description	Mfr Code	Mfr Part Number
A4A9R5	0757-0442	9	1	RESISTOR 10K +-1% .125W TF TC=0+-100	1970:	SFR25H
A4A9R7	0757-0442	9	1	RESISTOR 10K +-1% .125W TF TC=0+-100	1970:	SFR25H
A4A9R10	0698-0085	0	1	RESISTOR 2.61K 1% .125W TF TC=0+-100	19701	SFR25H
A4A9R11	0698-0085	0	1	RESISTOR 2.61K 1% .125W TF TC=0+-100	19701	SFR25H
A4A9R12	0757-0442	9	1	RESISTOR 10K +-1% .125W TF TC=0+-100	19701	SFR25H
A4A9R13	0757-0280	3	1	RESISTOR 1K +-1% .125W TF TC=0+-100	19701	SFR25H
A4A9R14	0757-0442	9	1	RESISTOR 10K +-1% .125W TF TC=0+-100	19701	SFR25H
A4A9R15	0757-0442	9	1	RESISTOR 10K +-1% .125W TF TC=0+-100	19701	SFR25H
A4A9R16	0757-0317	7	1	RESISTOR 1.33K +-1% .125W TF TC=0+-100	19701	SFR25H
A4A9R17	0757-0442	9	1	RESISTOR 10K +-1% .125W TF TC=0+-100	19701	SFR25H
A4A9R18	0757-0442	9	1	RESISTOR 10K +-1% .125W TF TC=0+-100	19701	SFR25H
A4A9R19	0757-0442	9	1	RESISTOR 10K +-1% .125W TF TC=0+-100	19701	SFR25H
A4A9R20	0757-0442	9	1	RESISTOR 10K +-1% .125W TF TC=0+-100	19701	SFR25H
A4A9R21	0757-0442	9	1	RESISTOR 10K +-1% .125W TF TC=0+-100	19701	SFR25H
A4A9R22	0698-3158	4	1	RESISTOR 23.7K 1% .125W TF TC=0+-100	19701	SFR25H
A4A9R23	0757-0463	4	1	RESISTOR 82.51: +-1% .125W TF TC=0+-100	19701	SFR25H
A4A9R24	0757-0447	4	1	RESISTOR 16.2K +-1% .125W TF TC=D+-100	19701	SFR25H
A4A9R25	0698-3161	9	1	RESISTOR 38.31: 1% .125W TF TC=0+-100	19701	SFR25H
A4A9R26	0698-3160	B	1	RESISTOR 31.6K 1% .125W TF TC=0+-100	19701	SFR25H
A4A9R27	0757-0442	9	1	RESISTOR 10K +-1% .125W TF TC=0+-100	19701	SFR25H
A4A9R28	0757-0458	7	1	RESISTOR 51.1K +-1% .125W TF TC=D+-100	19701	SFR25H
A4A9R29	0757-0420	3	1	RESISTOR 750 +-1% .125W TF TC=0+-100	19701	SFR25H
A4A9R30	0757-0438	3	1	RESISTOR 5.11K +-1% .125W TF TC=0+-100	19701	SFR25H
A4A9R40	0757-0444	L	1	RESISTOR 12.1K +-1% .125W TF TC=0+-100	19701	SFR25H
A4A9R41	0698-3459	8	1	RESISTOR 383K 1% .125W TF TC=0+-100	19701	SFR25H
A4A9R42	0698-3243	8	1	RESISTOR 178K 1% .125W TF TC=0+-100	19701	SFR25H
A4A9R47	0757-0438	3	1	RESISTOR 5.11K +-1% .125W TF TC=0+-100	19701	SFR25H
A4A9R48	0698-0083	8	1	RESISTOR 1.96K 1% .125W TF TC=0+-100	19701	SFR25H
A4A9R49	0698-3260	9	1	RESISTOR 464K 1% .125W TF TC=0+-100	19701	SFR25H
A4A9R51	0757-1094	9	1	RESISTOR 1.47K +-1% .125W TF TC=0+-100	19701	SFR25H
A4A9R52	0698-3150	6	1	RESISTOR 2.37K 1% .125W TF TC=0+-100	19701	SFR25H
A4A9R53	0698-3158	4	1	RESISTOR 23.71: 1% .125W TF TC=0+-100	19701	SFR25H
A4A9R54	3698-3260	9	1	RESISTOR 464K 1% .125W TF TC=0+-100	19701	SFR25H
A4A9R55	3757-0442	9	1	RESISTOR 10K +-1% .125W TF TC=0+-100	19701	SFR25H
A4A9R56	0757-0279	7	1	RESISTOR 3.16K +-1% .125W TF TC=D+-100	19701	SFR25H
A4A9R57	1698-3153	9	1	RESISTOR 3.831: 1% .125W TF TC=0+-100	19701	SFR25H
A4A9R59	1698-0085	0	1	RESISTOR 2.61K 1% .125W TF TC=0+-100	19701	SFR25H
A4A9R60	2100-3109	2	1	RESISTOR-TRMR 2K 10% TKF SIDE-ADJ 17-TRN	73138	89PR2K
A4A9R61	2100-3103	6	1	RESISTOR-TRMR 10K 10% TKF SIDE-ADJ 17-TR	73138	89PR10K
A4A9R62	2100-3054	6	1	RESISTOR-TRMR 50K 10% TKF SIDE-ADJ 17-TR	73138	89PR50K
A4A9R65	2100-3094	4	1	RESISTOR-TRMR 100K 10% TKF SIDE-ADJ 17-T	73138	89PR100K
A4A9R66	2100-3161	6	1	RESISTOR-TRMR 20K 10% TKF SIDE-ADJ 17-TR	73138	89PR20K
A4A9R69*	0698-3451	0	1	RESISTOR 133K 1% .125W TF TC=0+-100	19701	SFR25H
A4A9R70*	0698-3260	9	1	RESISTOR 464K 1% .125W TF TC=0+-100	19701	SFR25H
A4A9R71*	3698-3266	5	1	RESISTOR 237K 1% .125W TF TC=0+-100	19701	SFR25H
A4A9R72	3757-0442	9	1	RESISTOR 10K +-1% .125W TF TC=0+-100	19701	SFR25H
A4A9R73	2100-3056	3	1	RESISTOR-TRMR 5K 10% TKF SIDE-ADJ 17-TRN	73138	89PR5K
A4A9R74	1757-0418	9	1	RESISTOR 619 +-1% .125W TF TC=0+-100	19701	SFR25H

**Indicates factory-selected value*

HP Part Number 85662-60169

A4A9 IF Control

Reference Designation	HP Part Number	D	Qty	Description	Mfr Code	Mfr Part Number
A4A9TP1	1251-0600		1	CONNECTOR-SGL CONT PIN 1.14-MM-BSC-SZ S(	27264	16-06-0034
A4A9TP2	1251-0600		1	CONNECTOR-SGL CONT PIN 1.14-MM-BSC-SZ S(	27264	16-06-0034
A4A9U1	5081-8117		1	SCREENED 1826-0092 IC 1458 M2 OP AMP	28480	5081-8117
A4A9U2	1820-1418		1	IC DCDR TTL LS BCD-TO-DEC 4-TO-10-LINE 4	01295	SN74LS42N
A4A9U3	1820-1195		1	IC FF TTL LS D-TYPE POS-EDGE-TRIG COM CL	01295	SN74LS175N
A4A9U6	1820-1196		1	IC FF TTL LS D-TYPE POS-EDGE-TRIG COM Cl	01295	SN74LS174N
A4A9U7	1820-1216		1	IC DCDR TTL LS 3-TO-8-LINE 3-INP	0129E	SN74LS138N
A4A9U8	1820-1196		1	IC FF TTL LS D-TYPE POS-EDGE-TRIG COM CI	01295	SN74LS174N
A4A9U9	1820-1196		1	IC FF TTL LS D-TYPE POS-EDGE-TRIG COM CI	01295	SN74LS174N
A4A9U10	1820-1196		1	IC FF TTL LS D-TYPE POS-EDGE-TRIG CDM CI	01295	SN74LS174N
A4A9U11	1820-1196		1	IC FF TTL LS D-TYPE POS-EDGE-TRIG COM CI	01295	SN74LS174N
A4A9U12	1820-1418		1	IC DCDR TTL LS BCD-TO-DEC 4-TO-10-LINE 4	01295	SN74LS42N
A4A9U13	1820-0668		1	IC BFR TTL NON-INV HEX 1-INP	01295	SN7407N
A4A9U14	1820-0471		1	IC INV TTL HEX 1-INP	01295	SN7406N
A4A9U15	1820-0471		1	IC INV TTL HEX 1-INP	01295	SN7406N
A4A9U16	1820-0471		1	IC INV TTL HEX 1-INP	01295	SN7406N
A4A9VR1	1902-0041		1	DIODE-ZNR 5.11V 5% DO-35 PD=.4W	04713	
A4A9VR2	1902-3203		1	DIODE-ZNR 14.7V 5% DO-35 PD=.4W	04713	

Analyzer Repair Inc.

**Indicates factory-selected value*

HP Part Number 85662-60200

A4A9 IF Control

Reference Designation	HP Part Number	C D	Qty	Description	Mfr Code	Mfr Part Number
A4A9	85662-60200	2	1	BOARD ASSEMBLY, IF CONTROL (OPTION 067) (SERIAL PREFIXES: 2813A-2816A)	28480	85662-60200
A4A9C1	0160-4832	4	1	CAPACITOR-FXD .01UF +-10% 100VDC CER	04222	SA101C103KAAH
A4A9C3	0160-4832	4	1	CAPACITOR-FXD .01UF +-10% 100VDC CER	04222	SA101C103KAAH
A4A9C4	0160-4832	4	1	CAPACITOR-FXD .01UF +-10% 100VDC CER	04222	SA101C103KAAH
A4A9C5	0160-4832	4	1	CAPACITOR-FXD .01UF +-10% 100VDC CER	04222	SA101C103KAAH
A4A9C6	0160-4832	4	1	CAPACITOR-FXD .01UF +-10% 100VDC CER	04222	SA101C103KAAH
A4A9C7	0160-4832	4	1	CAPACITOR-FXD .01UF +-10% 100VDC CER	04222	SA101C103KAAH
A4A9C8	0160-4832	4	1	CAPACITOR-FXD .01UF +-10% 100VDC CER	04222	SA101C103KAAH
A4A9C9	0160-4832	4	1	CAPACITOR-FXD .01UF +-10% 100VDC CER	04222	SA101C103KAAH
A4A9C10	0160-4832	4	1	CAPACITOR-FXD .01UF +-10% 100VDC CER	04222	SA101C103KAAH
A4A9C11	0160-4832	4	1	CAPACITOR-FXD .01UF +-10% 100VDC CER	04222	SA101C103KAAH
A4A9C12	0160-4832	4	1	CAPACITOR-FXD .01UF +-10% 100VDC CER	04222	SA101C103KAAH
A4A9C13	0160-4832	4	1	CAPACITOR-FXD .01UF +-10% 100VDC CER	04222	SA101C103KAAH
A4A9C14	0160-4832	4	1	CAPACITOR-FXD .01UF +-10% 100VDC CER	04222	SA101C103KAAH
A4A9C15	0160-4822	2	1	CAPACITOR-FXD 1000PF +-5% 100VDC CER 0+-	04222	SA201A102JAAH
A4A9C16	0160-4822	2	1	CAPACITOR-FXD 1000PF +-5% 100VDC CER 0+-	04222	SA201A102JAAH
A4A9C17	0160-4822	2	1	CAPACITOR-FXD 1000PF +-5% 100VDC CER 0+-	04222	SA201A102JAAH
A4A9C18	0160-4822	2	1	CAPACITOR-FXD 1000PF +-5% 100VDC CER 0+-	04222	SA201A102JAAH
A4A9C19	0160-4832	4	1	CAPACITOR-FXD .01UF +-10% 100VDC CER	04222	SA101C103KAAH
A4A9C20	0180-0197	8	1	CAP-FXD 2.2uF 20 V TA	56289	150D225X9020A2-DYS
A4A9C21	0180-0197	8	1	CAP-FXD 2.2uF 20 V TA	56289	150D225X9020A2-DYS
A4A9C22	0180-0197	8	1	CAP-FXD 2.2uF 20 V TA	56289	150D225X9020A2-DYS
A4A9CR1	1901-0050	3	1	DIODE-SWITCHING 80V 200MA 2NS DO-35	9N171	1N4150
A4A9CR2	1901-0050	3	1	DIODE-SWITCHING 80V 200MA 2NS DO-35	9N171	1N4150
A4A9CR3	1901-0050	3	1	DIODE-SWITCHING 80V 200MA 2NS DO-35	9N171	1N4150
A4A9CR4	1901-0050	3	1	DIODE-SWITCHING 80V 200MA 2NS DO-35	9N171	1N4150
A4A9CR5	1901-0050	3	1	DIODE-SWITCHING 80V 200MA 2NS DO-35	9N171	1N4150
A4A9CR6	1901-0050	3	1	DIODE-SWITCHING 80V 200MA 2NS DO-35	9N171	1N4150
A4A9CR7	1901-0050	3	1	DIODE-SWITCHING 80V 200MA 2NS DO-35	9N171	1N4150
A4A9CR8	1901-0050	3	1	DIODE-SWITCHING 80V 200MA 2NS DO-35	9N171	1N4150
A4A9CR9	1901-0050	3	1	DIODE-SWITCHING 80V 200MA 2NS DO-35	9N171	1N4150
A4A9CR10	1901-0050	3	1	DIODE-SWITCHING 80V 200MA 2NS DO-35	9N171	1N4150
A4A9CR11	1901-0050	3	1	DIODE-SWITCHING 80V 200MA 2NS DO-35	9N171	1N4150
A4A9CR12	1901-0050	3	1	DIODE-SWITCHING 80V 200MA 2NS DO-35	9N171	1N4150
A4A9CR13	1901-0050	3	1	DIODE-SWITCHING 80V 200MA 2NS DO-35	9N171	1N4150
A4A9CR14	1901-0050	3	1	DIODE-SWITCHING 80V 200MA 2NS DO-35	9N171	1N4150
A4A9CR15	1901-0050	3	1	DIODE-SWITCHING 80V 200MA 2NS DO-35	9N171	1N4150
A4A9CR16	1901-0050	3	1	DIODE-SWITCHING 80V 200MA 2NS DO-35	9N171	1N4150
A4A9CR17	1901-0050	3	1	DIODE-SWITCHING 80V 200MA 2NS DO-35	9N171	1N4150
A4A9CR18	1901-0050	3	1	DIODE-SWITCHING 80V 200MA 2NS DO-35	9N171	1N4150
A4A9CR19	1901-0050	3	1	DIODE-SWITCHING 80V 200MA 2NS DO-35	9N171	1N4150
A4A9CR20	1901-0050	3	1	DIODE-SWITCHING BOV 200MA 2NS DO-35	9N171	1N4150
A4A9CR21	1901-0050	3	1	DIODE-SWITCHING 80V 200MA 2NS DO-35	9N171	1N4150
A4A9CR22	1901-0050	3	1	DIODE-SWITCHING 80V 200MA 2NS DO-35	9N171	1N4150
A4A9CR23	1901-0050	3	1	DIODE-SWITCHING 80V 200MA 2NS DO-35	9N171	1N4150
A4A9CR24	1901-0050	3	1	DIODE-SWITCHING 80V 200MA 2NS DO-35	9N171	1N4150

Repair Inc.

**Indicates factory-selected value*

HP Part Number 85662-60200

A4A9 IF Control

Reference Designation	HP Part Number	CD	Qty	Description	Mfr Code	Mfr Part Number
A4A9CR25	1901-0050	3	1	DIODE-SWITCHING 80V 200MA 2NS DO-35	9N171	1N4150
A4A9CR26	1901-0050	3	1	DIODE-SWITCHING 8DV 200MA 2NS DO-35	9N171	1N4150
A4A9CR27	1901-0050	3	1	DIODE-SWITCHING 80V 200MA 2NS DO-35	9N171	1N4150
A4A9CR28	1901-0050	3	1	DIODE-SWITCHING 80V 200MA 2NS DO-35	9N171	1N4150
A4A9CR29	1901-0050	3	1	DIODE-SWITCHING 8DV 200MA 2NS DO-35	9N171	1N4150
A4A9CR30	1901-0050	3	1	DIODE-SWITCHING 80V 200MA 2NS DO-35	9N171	1N4150
A4A9R2*	0698-3155	1	1	RESISTOR 4.641: 1% .125W TF TC=0+-100	2M627	CRB14 OR CRB25
A4A9R3*	0757-0442	9	1	RESISTOR 10K +-1% .125W TF TC=0+-100	2M627	CRB14 OR CRB25
A4A9R6*	0757-0465	6	1	RESISTOR 100K +-1% .125W TF TC=0+-100	2M627	CRB14 OR CRB25
A4A9R7*	0698-3451	0	1	RESISTOR 133K 1% .125W TF TC=0+-100	2M627	CRB14 OR CRB25
A4A9R10*	0698-3136	8	1	RESISTOR 17.8K 1% .125W TF TC=0+-100	2M627	CRB14 OR CRB25
A4A9R11*	0698-0083	8	1	RESISTOR 1.96K 1% .125W TF TC=0+-100	2M627	CRB14 OR CRB25
A4A9R14	0757-0442	9	1	RESISTOR 10K +-1% .125W TF TC=0+-100	2M627	CRB14 OR CRB25
A4A9R15	0698-0082	7	1	RESISTOR 464 1% .125W TF TC=0+-100	2M627	CRB14 OR CRB25
A4A9R16	0757-0424	7	1	RESISTOR 1.1K +-1% .125W TF TC=0+-100	2M627	CRB14 OR CRB25
A4A9R17	0757-0442	9	1	RESISTOR 10K +-1% .125W TF TC=0+-100	2M627	CRB14 OR CRB25
A4A9R18	0757-0317	7	1	RESISTOR 1.33K +-1% .125W TF TC=0+-100	2M627	CRB14 OR CRB25
A4A9R19	0757-0442	9	1	RESISTOR 10K +-1% .125W TF TC=0+-100	2M627	CRB14 OR CRB25
A4A9R23	0757-0419	0	1	RESISTOR 681 +-1% .125W TF TC=0+-100	2M627	CRB14 OR CRB25
A4A9R24	0757-0280	3	1	RESISTOR 1K +-1% .125W TF TC=0+-100	2M627	CRB14 OR CRB25
A4A9R25	0757-0438	3	1	RESISTOR 5.11K +-1% .125W TF TC=0+-100	2M627	CRB14 OR CRB25
A4A9R26	0757-0428	1	1	RESISTOR 1.62K +-1% .125W TF TC=0+-100	2M627	CRB14 OR CRB25
A4A9R29	0698-0085	0	1	RESISTOR 2.61K 1% .125W TF TC=0+-100	2M627	CRB14 OR CRB25
A4A9R30	0757-0458	7	1	RESISTOR 51.1K +-1% .125W TF TC=0+-100	2M627	CRB14 OR CRB25
A4A9R32	0757-0289	2	1	RESISTOR 13.3K +-1% .125W TF TC=0+-100	2M627	CRB14 OR CRB25
A4A9R33	0698-3156	2	1	RESISTOR 14.7K 1% .125W TF TC=0+-100	2M627	CRB14 OR CRB25
A4A9R34	0698-3437	2	1	RESISTOR 133 1% .125W TF TC=0+-100	2M627	CRB14 OR CRB25
A4A9R35	0757-0289	2	1	RESISTOR 13.3K +-1% .125W TF TC=0+-100	2M627	CRB14 OR CRB25
A4A9R36	0698-3156	2	1	RESISTOR 14.7K 1% .125W TF TC=0+-100	2M627	CRB14 OR CRB25
A4A9R37	0698-3437	2	1	RESISTOR 133 1% .125W TF TC=0+-100	2M627	CRB14 OR CRB25
A4A9R38	0757-0442	9	1	RESISTOR 10K +-1% .125W TF TC=0+-100	2M627	CRB14 OR CRB25
A4A9R39	0757-0442	9	1	RESISTOR 10K +-1% .125W TF TC=0+-100	2M627	CRB14 OR CRB25
A4A9R40	0698-0085	0	1	RESISTOR 2.61K 1% .125W TF TC=0+-100	2M627	CRB14 OR CRB25
A4A9R41	0757-0438	3	1	RESISTOR 5.11K +-1% .125W TF TC=0+-100	2M627	CRB14 OR CRB25
A4A9R42	0757-0444	1	1	RESISTOR 12.1K +-1% .125W TF TC=0+-100	2M627	CRB14 OR CRB25
A4A9R43	0698-0084	9	1	RESISTOR 2.15K 1% .125W TF TC=0+-100	2M627	CRB14 OR CRB25
A4A9R44	0698-0084	9	1	RESISTOR 2.15K 1% .125W TF TC=0+-100	2M627	CRB14 OR CRB25
A4A9R45	0698-3450	9	1	RESISTOR 42.21: 1% .125W TF TC=0+-100	2M627	CRB14 OR CRB25
A4A9R46*	0757-0466	7	1	RESISTOR 110K +-1% .125W TF TC=0+-100	2M627	CRB14 OR CRB25
A4A9R47	0698-3457	6	1	RESISTOR 316K 1% .125W TF TC=0+-100	2M627	CRB14 OR CRB25
A4A9R48*	0698-3458	7	1	RESISTOR 348K 1% .125W TF TC=0+-100	2M627	CRB14 OR CRB25
A4A9R49	0698-3161	9	1	RESISTOR 38.31: 1% .125W TF TC=0+-100	2M627	CRB14 OR CRB25
A4A9R50*	0757-0462	3	1	RESISTOR 75K +-1% .125W TF TC=0+-100	2M627	CRB14 OR CRB25
A4A9R51	0757-0464	5	1	RESISTOR 90.9K +-1% .125W TF TC=0+-100	2M627	CRB14 OR CRB25
A4A9R52*	0698-8960	6	1	RESISTOR 750K +-1% .125W TF TC=0+-100	2M627	CRB14 OR CRB25
A4A9R53	0698-3449	6	1	RESISTOR 28.7K 1% .125W TF TC=0+-100	2M627	CRB14 OR CRB25
A4A9R54	0757-0199	3	1	RESISTOR 21.5K +-1% .125W TF TC=0+-100	2M627	CRB14 OR CRB25
A4A9R55*	0757-0460	1	1	RESISTOR 61.9K +-1% .125W TF TC=0+-100	2M627	CRB14 OR CRB25

**Indicates factory-selected value*

HP Part Number 8566240200

A4A9 IF Control

Reference Designatior	HP Part Number	C D	Qty	Description	Mfr Code	Mfr Part Number
A4A9R56	0757-0460		1	RESISTOR 61.9K +-1% .125W TF TC=0+-100	2M627	CRB14 OR CRB25
A4A9R57*	0698-3460		1	RESISTOR 422K 1% .125W TF TC=0+-100	2M627	CRB14 OR CRB25
A4A9R58	0698-3450		1	RESISTOR 42.2K 1% .125W TF TC=0+-100	2M627	CRB14 OR CRB25
A4A9R59*	0698-8824		1	RESISTOR 562K +-1% .125W TF TC=0+-100	2M627	CRB14 OR CRB25
A4A9R60	2100-3103		1	RESISTOR-TRMR 10K 10% TKF SIDE-ADJ 17-TI	32997	3006P-DM3-103
A4A9R61	2100-3054		1	RESISTOR-TRMR 50K 10% TKF SIDE-ADJ 17-TI	32997	3006P-DM3-503
A4A9R62	2100-3162		1	RESISTOR-TRMR 200K 10% TKF SIDE-ADJ 17-i	32997	3006P-DM3-204
A4A9R63	0698-3437		1	RESISTOR 133 1% .125W TF TC=0+-100	2M627	CRB14 OR CRB25
A4A9R64	0757-0289		1	RESISTOR 13.3K +-1% .125W TF TC=0+-100	2M627	CRB14 OR CRB25
A4A9R65	2100-3162		1	RESISTOR-TRMR 200K 10% TKF SIDE-ADJ 17-1	32997	3006P-DM3-204
A4A9R66	2100-3054		1	RESISTOR-TRMR 5DK 10% TKF SIDE-ADJ 17-TF	32997	3006P-DM3-503
A4A9R67	0698-0085		1	RESISTOR 2.61K 1% .125W TF TC=0+-100	2M627	CRB14 OR CRB25
A4A9R68	0698-0085		1	RESISTOR 2.61K 1% .125W TF TC=0+-100	2M627	CRB14 OR CRB25
A4A9R69	0698-3260		1	RESISTOR 464K 1% .125W TF TC=0+-100	2M627	CRB14 OR CRB25
A4A9R70*	0698-8826		1	RESISTOR 825K +-1% .125W TF TC=D+-100	2M627	CRB14 OR CRB25
A4A9R71	0757-0199		1	RESISTOR 21.5K +-1% .125W TF TC=0+-100	2M627	CRB14 OR CRB25
A4A9R72*	0757-0467		1	RESISTOR 121K +-1% .125W TF TC=0+-100	2M627	CRB14 OR CRB25
A4A9R73	2100-3103		1	RESISTOR-TRMR 10K 10% TKF SIDE-ADJ 17-TR	32997	3006P-DM3-103
A4A9R74*	3757-0463		1	RESISTOR 82.5K +-1% .125W TF TC=0+-100	2M627	CRB14 OR CRB25
A4A9R75	3698-3156		1	RESISTOR 14.7K 1% .125W TF TC=0+-100	2M627	CRB14 OR CRB25
A4A9R76	1757-0465		1	RESISTOR 100K +-1% .125W TF TC=0+-100	2M627	CRB14 OR CRB25
A4A9R77	0757-0442		1	RESISTOR 10K +-1% .125W TF TC=0+-100	2M627	CRB14 OR CRB25
A4A9R78	0757-0280		1	RESISTOR 1K +-1% .125W TF TC=0+-100	2M627	CRB14 OR CRB25
A4A9R79	0757-0280		1	RESISTOR 1K +-1% .125W TF TC=0+-100	2M627	CRB14 OR CRB25
A4A9R80	0757-0280		1	RESISTOR 1K +-1% .125W TF TC=0+-100	2M627	CRB14 OR CRB25
A4A9R81	0757-0280		1	RESISTOR 1K +-1% .125W TF TC=0+-100	2M627	CRB14 OR CRB25
A4A9R82	0698-0084		1	RESISTOR 2.15K 1% .125W TF TC=0+-100	2M627	CRB14 OR CRB25
A4A9TP1	1251-0600		1	CONNECTOR-SGL CONT PIN 1.14-MM-BSC-SZ SC	83486	928-196-004140
A4A9TP2	1251-0600		1	CONNECTOR-SGL CONT PIN 1.14-MM-BSC-SZ SC	83486	928-196-004140
A4A9U1	1826-0990		1	IC OP AMP GP DUAL 8-DIP-C PKG	01295	MC1458JG
A4A9U2	1820-0468		1	IC DCDR TTL BCD-TO-DEC 4-TO-10-LINE 4-IN	01295	SN7445N
A4A9U3	1858-0076		1	TRANSISTOR ARRAY 14-PIN PLSTC TO-116	04713	MPQ2907P
A4A9U4	1858-0076		1	TRANSISTOR ARRAY 14-PIN PLSTC TO-116	04713	MPQ2907P
A4A9U5	1810-0277		1	NETWORK-RES IO-SIP 2.2K OHM X 9	11236	750-101
A4A9U6	1820-0468		1	IC DCDR TTL BCD-TO-DEC 4-TO-10-LINE 4-IN	01295	SN7445N
A4A9U7	1820-1195		1	IC FF TTL LS D-TYPE POS-EDGE-TRIG COM CL	01295	SN74LS175N
A4A9U8	1858-0077		1	TRANSISTOR ARRAY 14-PIN PLSTC TO-116	04713	MPQ2222P
A4A9U9	1820-0471		1	IC INV TTL HEX 1-INP	01295	SN7406N
A4A9U10	1820-1196		1	IC FF TTL LS D-TYPE POS-EDGE-TRIG COM CL	01295	SN74LS174N
A4A9U11	1820-0468		1	IC DCDR TTL BCD-TO-DEC 4-TO-10-LINE 4-IN	01295	SN7445N
A4A9U12	1810-0280		1	JETWORK-RES 10-SIP 10.0K OHM X 9	11236	750-101
A4A9U13	.820-1216		1	IC DCDR TTL LS 3-TO-8-LINE 3-INP	01295	SN74LS138N
A4A9U14	.820-1196		1	IC FF TTL LS D-TYPE POS-EDGE-TRIG COM CL	01295	SN74LS174N
A4A9U15	.820-0471		1	IC INV TTL HEX 1-INP	01295	SN7406N
A4A9U16	.858-0076		1	TRANSISTOR ARRAY 14-PIN PLSTC TO-116	04713	MPQ2907P
A4A9U17	.820-1196		1	:C FF TTL LS D-TYPE POS-EDGE-TRIG COM CL	01295	SN74LS174N
A4A9U18	820-1196		1	:C FF TTL LS D-TYPE POS-EDGE-TRIG CDM CL	01295	SN74LS174N

**Indicates factory-selected value*

HP Part Number 85662-60200

A4A9 IF Control

Reference Designation	HP Part Number	C-D	Qty	Description	Mfr Code	Mfr Part Number
A4A9U19	1820-0471	(	1	IC INV TTL HEX 1-INP	0129[	SN7406N
A4A9U20	1820-1196	8	1	IC FF TTL LS D-TYPE POS-EDGE-TRIG COM CL	0129[	SN74LS174N
A4A9U21	1820-2024	3	1	IC DRVR TTL LS LINE DRVR OCTL	0129[	SN74LS244N
A4A9U22	1810-0280	8	1	NETWORK-RES 10-SIP 10.0K OHM X 9	11236	750-101
A4A9VR1	1902-3203	6	1	DIODE-ZNR 14.7V 5% DO-35 PD=.4W	0471:	
A4A9VR2	1902-0041	4	1	DIODE-ZNR 5.11V 5% DO-35 PD=.4W	04713	
A4A9W2	8159-0005	(	1	RESISTOR-ZERO OHMS 22 AWG LEAD DIA	5521C	L-2007-1
A4A9W4	8159-0005	(	1	RESISTOR-ZERO OHMS 22 AWG LEAD DIA	5521C	L-2007-1

Analyzer Repair Inc.

**Indicates factory-selected value*

HP Part Number 85662-60224

A4A9 IF Control

Reference Designation	HP Part Number	CD	Qty	Description	Mfr Code	Mfr Part Number
A4A9	85662-60224	0	1	BOARD ASSEMBLY IF CONTROL (OPTION 067) (SERIAL PREFIX: 2848A)	28480	85662-60224
A4A9C1	0160-4832	4	1	CAPACITOR-FXD .01UF +-10% 100VDC CER	04222	SA101C103KAAH
A4A9C3	0160-4832	4	1	CAPACITOR-FXD .01UF +-10% 100VDC CER	04222	SA101C103KAAH
A4A9C4	0160-4832	4	1	CAPACITOR-FXD .01UF +-10% 100VDC CER	04222	SA101C103KAAH
A4A9C5	0160-4832	4	1	CAPACITOR-FXD .01UF +-10% 100VDC CER	04222	SA101C103KAAH
A4A9C6	0160-4832	4	1	CAPACITOR-FXD .01UF +-10% 100VDC CER	04222	SA101C103KAAH
A4A9C7	0160-4832	4	1	CAPACITOR-FXD .01UF +-10% 100VDC CER	04222	SA101C103KAAH
A4A9C8	0160-4832	4	1	CAPACITOR-FXD .01UF +-10% 100VDC CER	04222	SA101C103KAAH
A4A9C9	0160-4832	4	1	CAPACITOR-FXD .01UF +-10% 100VDC CER	04222	SA101C103KAAH
A4A9C10	0160-4832	4	1	CAPACITOR-FXD .01UF +-10% 100VDC CER	04222	SA101C103KAAH
A4A9C11	0160-4832	4	1	CAPACITOR-FXD .01UF +-10% 100VDC CER	04222	SA101C103KAAH
A4A9C12	0160-4832	4	1	CAPACITOR-FXD .01UF +-1o% 100VDC CER	04222	SA101C103KAAH
A4A9C13	0160-4832	4	1	CAPACITOR-FXD .01UF +-10% 100VDC CER	04222	SA101C103KAAH
A4A9C14	0160-4832	4	1	CAPACITOR-FXO .01UF +-10% 100VDC CER	04222	SA101C103KAAH
A4A9C15	0160-4822	2	1	CAPACITOR-FXD 1000PF +-5% 100VDC CER	04222	SA201A102JAAH
A4A9C16	0160-4822	2	1	CAPACITOR-FXD 1000PF +-5% 100VDC CER	04222	SA201A102JAAH
A4A9C17	0160-4822	2	1	CAPACITOR-FXD 1000PF +-5% 100VDC CER	04222	SA201A102JAAH
A4A9C18	0160-4822	2	1	CAPACITOR-FXD 1000PF +-5% 100VDC CER	04222	SA201A102JAAH
A4A9C19	0160-4832	4	1	CAPACITOR-FXD .01UF +-10% 100VDC CER	04222	SA101C103KAAH
A4A9C20	0180-0197	8	1	CAPACITOR-FXD 2.2UF+-10% 20VDC TA	56289	150D225X9020A2-DYS
A4A9C21	0180-0197	8	1	CAPACITOR-FXD 2.2UF+-10% 20VDC TA	56289	150D225X9020A2-DYS
A4A9C22	0180-0197	8	1	CAPACITOR-FXD 2.2UF+-10% 20VDC TA	56289	150D225X9020A2-DYS
A4A9CR1	1901-0050	3	1	DIODE-SWITCHING 80V 200MA 2NS DO-35	9N171	1N4150
A4A9CR2	1901-0050	3	1	DIODE-SWITCHING 80V 200MA 2NS DO-35	9N171	1N4150
A4A9CR3	1901-0050	3	1	DIODE-SWITCHING 80V 200MA 2NS DO-35	9N171	1N4150
A4A9CR4	1901-0050	3	1	DIODE-SWITCHING 80V 200MA 2NS DO-35	9N171	1N4150
A4A9CR5	1901-0050	3	1	DIODE-SWITCHING 80V 200MA 2NS DO-35	9N171	1N4150
A4A9CR6	1901-0050	3	1	DIODE-SWITCHING 80V 200MA 2NS DO-35	9N171	1N4150
A4A9CR7	1901-0050	3	1	DIODE-SWITCHING 80V 200MA 2NS DO-35	9N171	1N4150
A4A9CR8	1901-0050	3	1	DIODE-SWITCHING 80V 200MA 2NS DO-35	9N171	1N4150
A4A9CR9	1901-0050	3	1	DIODE-SWITCHING 80V 200MA 2NS DO-35	9N171	1N4150
A4A9CR10	1901-0050	3	1	DIODE-SWITCHING 80V 200MA 2NS DO-35	9N171	1N4150
A4A9CR11	1901-0050	3	1	DIODE-SWITCHING 80V 200MA 2NS DO-35	9N171	1N4150
A4A9CR12	1901-0050	3	1	DIODE-SWITCHING 80V 200MA 2NS DO-35	9N171	1N4150
A4A9CR13	1901-0050	3	1	DIODE-SWITCHING 80V 200MA 2NS DO-35	9N171	1N4150
A4A9CR14	1901-0050	3	1	DIODE-SWITCHING 80V 200MA 2NS DO-35	9N171	1N4150
A4A9CR15	1901-0050	3	1	DIODE-SWITCHING 80V 200MA 2NS DO-35	9N171	1N4150
A4A9CR16	1901-0050	3	1	DIODE-SWITCHING 80V 200MA 2NS DO-35	9N171	1N4150
A4A9CR17	1901-0050	3	1	DIODE-SWITCHING 80V 200MA 2NS DO-35	9N171	1N4150
A4A9CR18	1901-0050	3	1	DIODE-SWITCHING 80V 200MA 2NS DO-35	9N171	1N4150
A4A9CR19	1901-0050	3	1	DIODE-SWITCHING 80V 200MA 2NS DO-35	9N171	1N4150
A4A9CR20	1901-0050	3	1	DIODE-SWITCHING 80V 200MA 2NS DO-35	9N171	1N4150
A4A9CR21	1901-0050	3	1	DIODE-SWITCHING 80V 200MA 2NS DO-35	9N171	1N4150
A4A9CR22	1901-0050	3	1	DIODE-SWITCHING 80V 200MA 2NS DO-35	9N171	1N4150
A4A9CR23	1901-0050	3	1	DIODE-SWITCHING 80V 200MA 2NS DO-35	9N171	1N4150
A4A9CR24	1901-0050	3	1	DIODE-SWITCHING 80V 200MA 2NS DO-35	9N171	1N4150

**Indicates factory-selected value*

HP Part Number 85662-60224
A4A9 IF Control

Reference Designatio	HP Part Number	C D	Qty	Description	Mfr Code	Mfr Part Number
A4A9CR25	1901-0050		1	DIODE-SWITCHING 80V 20DMA 2NS DO-35	9N17	1N4150
A4A9CR26	1901-0050		1	DIODE-SWITCHING 80V 200MA 2NS DO-35	9N17	1N4150
A4A9CR27	1901-0050		1	DIODE-SWITCHING 80V 200MA 2NS DO-35	9N17	1N4150
A4A9CR28	1901-0050		1	DIODE-SWITCHING 80V 200MA 2NS DO-35	9N17	1N4150
A4A9CR29	1901-0050		1	DIODE-SWITCHING 80V 200MA 2NS DO-35	9N17	1N4150
A4A9CR30	1901-0050		1	DIODE-SWITCHING 80V 200MA 2NS DO-35	9N17	1N4150
A4A9MP1				NOT ASSIGNED		
A4A9MP2	0360-0124		1	CONNECTOR-SGL CONT PIN .04-IN-BSC-SZ RNC	9730(	
A4A9MP3	0360-0124		1	CONNECTOR-SGL CONT PIN .04-IN-BSC-SZ RNC	97301	
A4A9MP4	0360-0124		1	CONNECTOR-SGL CONT PIN .04-IN-BSC-SZ RNC	9730(	
A4A9MP5	0360-0124		1	CONNECTOR-SGL CONT PIN .04-IN-BSC-SZ RNC	9730(	
A4A9MP6	0360-0124		1	CONNECTOR-SGL CONT PIN .04-IN-BSC-SZ RNC	9730(	
A4A9MP7	0360-0124		1	CONNECTOR-SGL CONT PIN .04-IN-BSC-SZ RNC	9730(	
A4A9MP8	3360-0124		1	CONNECTOR-SGL CONT PIN .04-IN-BSC-SZ RNC	9730(	
A4A9MP9	0360-0124	3	1	CONNECTOR-SGL CONT PIN .04-IN-BSC-SZ RNC	973oc	
A4A9MP10	0360-0124	3	1	CONNECTOR-SGL CONT PIN .04-IN-BSC-SZ RNC	9730(	
A4A9MP11	1360-0124	3	1	CONNECTOR-SGL CONT PIN .04-IN-BSC-SZ RND	97301	
A4A9MP12	0360-0124	.	1	CONNECTOR-SGL CONT PIN .04-IN-BSC-SZ RND	973oc	
A4A9MP13	0360-0124	.	1	CONNECTOR-SGL CONT PIN .04-IN-BSC-SZ RND	973DC	
A4A9R2*	0698-0085	C	1	RESISTOR 2.61K 1% .125W TF TC=0+-100	19701	SFR25H
A4A9R3*	0757-0441	E	1	RESISTOR 8.251: +-1% .125W TF TC=0+-100	19701	SFR25H
A4A9R6*	1698-3162	C	1	RESISTOR 46.41: 1% .125W TF TC=0+-100	19701	SFR25H
A4A9R7*	0757-0123	3	1	RESISTOR 34.81: +-1% .125W TF TC=0+-100	19701	SFR25H
A4A9R10*	0757-0440	7	1	RESISTOR 7.5K +-1% .125W TF TC=0+-100	19701	SFR25H
A4A9R11*	1698-3150	6	1	RESISTOR 2.371: 1% .125W TF TC=0+-100	19701	SFR25H
A4A9R14	1757-0442	3	1	RESISTOR 10K +-1% .125W TF TC=0+-100	19701	SFR25H
A4A9R15	1698-0082	7	1	RESISTOR 464 1% .125W TF TC=0+-100	19701	SFR25H
A4A9R16	0757-0424	7	1	RESISTOR 1.1K +-1% .125W TF TC=0+-100	19701	SFR25H
A4A9R17	0757-0442	3	1	RESISTOR 10K +-1% .125W TF TC=0+-100	19701	SFR25H
A4A9R18	0757-0317	7	1	RESISTOR 1.33K +-1% .125W TF TC=0+-100	19701	SFR25H
A4A9R19	0757-0442	3	1	RESISTOR 10K +-1% .125W TF TC=0+-100	19701	SFR25H
A4A9R23	757-0419	0	1	RESISTOR 681 +-1% .125W TF TC=0+-100	19701	SFR25H
A4A9R24	757-0280	3	1	RESISTOR 1K +-1% .125W TF TC=0+-100	19701	SFR25H
A4A9R25	757-0438	3	1	RESISTOR 5.11K +-1% .125W TF TC=0+-100	19701	SFR25H
A4A9R26	757-0428	L	1	RESISTOR 1.62K +-1% .125W TF TC=0+-100	19701	SFR25H
A4A9R29	698-0085	0	1	RESISTOR 2.61K 1% .125W TF TC=0+-100	19701	SFR25H
A4A9R30	757-0458	1	1	RESISTOR 51.1K +-1% .125W TF TC=0+-100	19701	SFR25H
A4A9R32	757-0289	1	1	RESISTOR 13.3K +-1% .125W TF TC=0+-100	19701	SFR25H
A4A9R33	698-3156	1	1	RESISTOR 14.7K 1% .125W TF TC=D+-100	19701	SFR25H
A4A9R34	698-3437	1	1	RESISTOR 133 1% .125W TF TC=0+-100	19701	SFR25H
A4A9R35	757-0289	1	1	RESISTOR 13.3K +-1% .125W TF TC=0+-100	19701	SFR25H
A4A9R36	698-3156		1	RESISTOR 14.7K 1% .125W TF TC=0+-100	19701	SFR25H
A4A9R37	698-3437		1	RESISTOR 133 1% .125W TF TC=0+-100	19701	SFR25H
A4A9R38	757-0442		1	RESISTOR 10K +-1% .125W TF TC=0+-100	19701	SFR25H
A4A9R39	757-0442		1	RESISTOR 10K +-1% .125W TF TC=0+-100	19701	SFR25H
A4A9R40	698-0085		1	RESISTOR 2.61K 1% .125W TF TC=0+-100	19701	SFR25H
A4A9R41	757-0438		1	RESISTOR 5.11K +-1% .125W TF TC=0+-100	19701	SFR25H
A4A9R42	757-0444		1	RESISTOR 12.1K +-1% .125W TF TC=D+-100	19701	SFR25H

**Indicates factory-selected value*

HP Part Number 85662-60224

A4A9 IF Control

Reference Designation	HP Part Number	C-D	Qty	Description	Mfr Code	Mfr Part Number
A4A9R43	0698-0084	9	1	RESISTOR 2.15K 1% .125W TF TC=0+-100	19701	SFR25H
A4A9R44	0698-0084	9	1	RESISTOR 2.15K 1% .125W TF TC=0+-100	19701	SFR25H
A4A9R45	0698-3450	9	1	RESISTOR 42.21: 1% .125W TF TC=0+-100	19701	SFR25H
A4A9R46*	0757-0466	7	1	RESISTOR 110K +-1% .125W TF TC=0+-100	19701	SFR25H
A4A9R47	0698-3457	6	1	RESISTOR 316K 1% .125W TF TC=0+-100	19701	SFR25H
A4A9R48*	0698-3458	7	1	RESISTOR 348K 1% .125W TF TC=0+-100	19701	SFR25H
A4A9R49	0698-3161	9	1	RESISTOR 38.31: 1% .125W TF TC=0+-100	19701	SFR25H
A4A9R50*	0757-0462	3	1	RESISTOR 75K +-1% .125W TF TC=D+-100	19701	SFR25H
A4A9R51	0757-0464	5	1	RESISTOR 90.9K +-1% .125W TF TC=0+-100	19701	SFR25H
A4A9R52*	0698-8960	6	1	RESISTOR 750K +-1% .125W TF TC=0+-100	19701	SFR25H
A4A9R53	0698-3449	6	1	RESISTOR 28.7K 1% .125W TF TC=0+-100	19701	SFR25H
A4A9R54	0757-0199	3	1	RESISTOR 21.5K +-1% .125W TF TC=D+-100	19701	SFR25H
A4A9R55*	0757-0460	1	1	RESISTOR 61.9K +-1% .125W TF TC=0+-100	19701	SFR25H
A4A9R56	0757-0460	1	1	RESISTOR 61.9K +-1% .125W TF TC=0+-100	19701	SFR25H
A4A9R57*	3698-3460	1	1	RESISTOR 422K 1% .125W TF TC=0+-100	19701	SFR25H
A4A9R58	3698-3450	9	1	RESISTOR 42.21: 1% .125W TF TC=0+-100	19701	SFR25H
A4A9R59*	3698-8824	1	1	RESISTOR 562K +-1% .125W TF TC=0+-100	19701	SFR25H
A4A9R60	2100-3103	6	1	RESISTOR-TRMR 10K 10% TKF SIDE-ADJ 17-TR	73138	89PR10K
A4A9R61	2100-3054	6	1	RESISTOR-TRMR 50K 10% TKF SIDE-ADJ 17-TR	73138	89PR50K
A4A9R62	2100-3162	7	1	RESISTOR-TRMR 20DK 10% TKF SIDE-ADJ 17-T	73138	89PR200K
A4A9R63	1698-3437	2	1	RESISTOR 133 1% .125W TF TC=0+-100	19701	SFR25H
A4A9R64	1757-0289	2	1	RESISTOR 13.3K +-1% .125W TF TC=D+-100	19701	SFR25H
A4A9R65	2100-3162	7	1	RESISTOR-TRMR 200K 10% TKF SIDE-ADJ 17-T	73138	89PR200K
A4A9R66	2100-3054	6	1	RESISTOR-TRMR 50K 10% TKF SIDE-ADJ 17-TR	73138	89PR50K
A4A9R67	0698-0085	0	1	RESISTOR 2.61K 1% .125W TF TC=0+-100	19701	SFR25H
A4A9R68	1698-0085	D	1	RESISTOR 2.61K 1% .125W TF TC=0+-100	19701	SFR25H
A4A9R69	0698-3260	9	1	RESISTOR 464K 1% .125W TF TC=0+-100	19701	SFR25H
A4A9R70*	0698-8826	3	1	RESISTOR 825K +-1% .125W TF TC=0+-100	19701	SFR25H
A4A9R71	0757-0199	3	1	RESISTOR 21.5K +-1% .125W TF TC=0+-100	19701	SFR25H
A4A9R72*	0757-0467	8	1	RESISTOR 121K +-1% .125W TF TC=0+-100	19701	SFR25H
A4A9R73	2100-3103	6	1	RESISTOR-TRMR 10K 10% TKF SIDE-ADJ 17-TR	73138	89PR10K
A4A9R74*	0757-0463	4	1	RESISTOR 82.51: +-1% .125W TF TC=0+-100	19701	SFR25H
A4A9R75	0698-3156	2	1	RESISTOR 14.7K 1% .125W TF TC=D+-100	19701	SFR25H
A4A9R76	0757-0465	6	1	RESISTOR 100K +-1% .125W TF TC=0+-100	19701	SFR25H
A4A9R77	0757-0442	9	1	RESISTOR 10K +-1% .125W TF TC=0+-100	19701	SFR25H
A4A9R78	0757-0280	3	1	RESISTOR 1K +-1% .125W TF TC=0+-100	19701	SFR25H
A4A9R79	0757-0280	3	1	RESISTOR 1K +-1% .125W TF TC=0+-100	19701	SFR25H
A4A9R80	0757-0280	3	1	RESISTOR 1K +-1% .125W TF TC=0+-100	19701	SFR25H
A4A9R81	1757-0280	3	1	RESISTOR 1K +-1% .125W TF TC=0+-100	19701	SFR25H
A4A9R82	0698-0084	9	1	RESISTOR 2.15K 1% .125W TF TC=0+-100	19701	SFR25H
A4A9R83*	1757-0438	3	1	RESISTOR 5.11K +-1% .125W TF TC=0+-100	19701	SFR25H
A4A9R84*	0757-0462	3	1	RESISTOR 75K +-1% .125W TF TC=0+-100	19701	SFR25H
A4A9R85*	0757-0467	B	1	RESISTOR 121K +-1% .125W TF TC=0+-100	19701	SFR25H
A4A9R86*	0757-0289	2	1	RESISTOR 13.3K +-1% .125W TF TC=0+-100	19701	SFR25H
A4A9R87*	0757-0417	B	1	RESISTOR 562 +-1% .125W TF TC=0+-100	19701	SFR25H
A4A9R88*	0757-0279	0	1	RESISTOR 3.16K +-1% .125W TF TC=0+-100	19701	SFR25H
A4A9RT1	1837-0007	2	1	THERMISTOR DISC 10K-OHM TC=-4.4%/C-DEG	15801	JA41J1

**Indicates factory-selected value*

HP Part Number 85662-60224

A4A9 IF Control

Reference Designatio	HP Part Number	C D	Qty	Description	Mfr Code	Mfr Part Number
A4A9RT2	0837-0380		1	THERMISTOR TUB WITH AXL LEADS 50K-OHM		MSC 503K
A4A9RT3	0837-0380	4	1	THERMISTOR TUB WITH AXL LEADS 50K-OHM		MSC 503K
A4A9RT4	0837-0007	4	1	THERMISTOR DISC 10K-OHM TC=-4.4%/C-DEG	15801	JA41J1
A4A9RT5	0837-0393	9	1	THERMISTOR DISC 5K-OHM		1DC502K-270-S
A4A9RT6	0837-0393	9	1	THERMISTOR DISC 5K-OHM		1DC502K-270-S
A4A9TP1	1251-0600	C	1	CONNECTOR-SGL CONT PIN 1.14-MM-BSC-SZ SC	27264	16-06-0034
A4A9TP2	1251-0600	C	1	CONNECTOR-SGL CONT PIN 1.14-MM-BSC-SZ SC	27264	16-06-0034
A4A9U1	1826-0990	C	1	IC OP AMP GP DUAL 8-DIP-C PKG	04713	MC1458U
A4A9U2	1820-0468	5	1	IC DCDR TTL BCD-TO-DEC 4-TO-10-LINE 4-IN	01295	SN7445N
A4A9U3	1858-0076	C	1	TRANSISTOR ARRAY 14-PIN PLSTC TO-116	04713	MPQ2907P
A4A9U4	1858-0076	C	1	TRANSISTOR ARRAY 14-PIN PLSTC TO-116	04713	MPQ2907P
A4A9U5	1810-0277	3	1	NETWORK-RES 10-SIP 2.2K OHM X 9	91637	MSP10A01
A4A9U6	1820-0468	5	1	IC DCDR TTL BCD-TO-DEC 4-TO-10-LINE 4-IN	01295	SN7445N
A4A9U7	1820-1195	7	1	IC FF TTL LS D-TYPE POS-EDGE-TRIG COM CL	01295	SN74LS175N
A4A9U8	1858-0077	1	1	TRANSISTOR ARRAY 14-PIN PLSTC TO-116	04713	MPQ2222P
A4A9U9	1820-0471	0	1	IC INV TTL HEX 1-INP	01295	SN7406N
A4A9U10	1820-1196	8	1	IC FF TTL LS D-TYPE POS-EDGE-TRIG COM CL	01295	SN74LS174N
A4A9U11	1820-0468	5	1	IC DCDR TTL BCD-TO-DEC 4-TO-10-LINE 4-IN	01295	SN7445N
A4A9U12	1810-0280	8	1	NETWORK-RES 10-SIP 10.0K OHM X 9	91637	MSP10A01
A4A9U13	1820-1216	3	1	IC DCDR TTL LS 3-TO-8-LINE 3-INP	01295	SN74LS138N
A4A9U14	1820-1196	B	1	IC FF TTL LS D-TYPE POS-EDGE-TRIG COM CL	01295	SN74LS174N
A4A9U15	1820-0471	D	1	IC INV TTL HEX 1-INP	01295	SN7406N
A4A9U16	1858-0076	D	1	TRANSISTOR ARRAY 14-PIN PLSTC TO-116	04713	MPQ2907P
A4A9U17	1820-1196	3	1	IC FF TTL LS D-TYPE POS-EDGE-TRIG COM CL	01295	SN74LS174N
A4A9U18	1820-1196	B	1	IC FF TTL LS D-TYPE POS-EDGE-TRIG COH CL	01295	SN74LS174N
A4A9U19	1820-0471	3	1	IC INV TTL HEX 1-INP	01295	SN7406N
A4A9U20	1820-1196	a	1	IC FF TTL LS D-TYPE POS-EDGE-TRIG COM CL	01295	SN74LS174N
A4A9U21	1820-2024	3	1	IC DRVR TTL LS LINE DRVR OCTL	01295	SN74LS244N
A4A9U22	1810-0280	a	1	NETWORK-RES 10-SIP 10.0K OHM X 9	91637	MSP10A01
A4A9VR1	1902-3203	6	1	DIODE-ZNR 14.7V 5% DO-35 PD=.4W	04713	
A4A9VR2	1902-0041	4	1	DIODE-ZNR 5.11V 5% DO-35 PD=.4W	04713	
A4A9W2	8159-0005	0	1	RESISTOR-ZERO OHMS 22 AWG LEAD DIA	55210	L-2007-1
A4A9W4	8159-0005	0	1	RESISTOR-ZERO OHMS 22 AWG LEAD DIA	55210	L-2007-1

**Indicates factory-selected value*

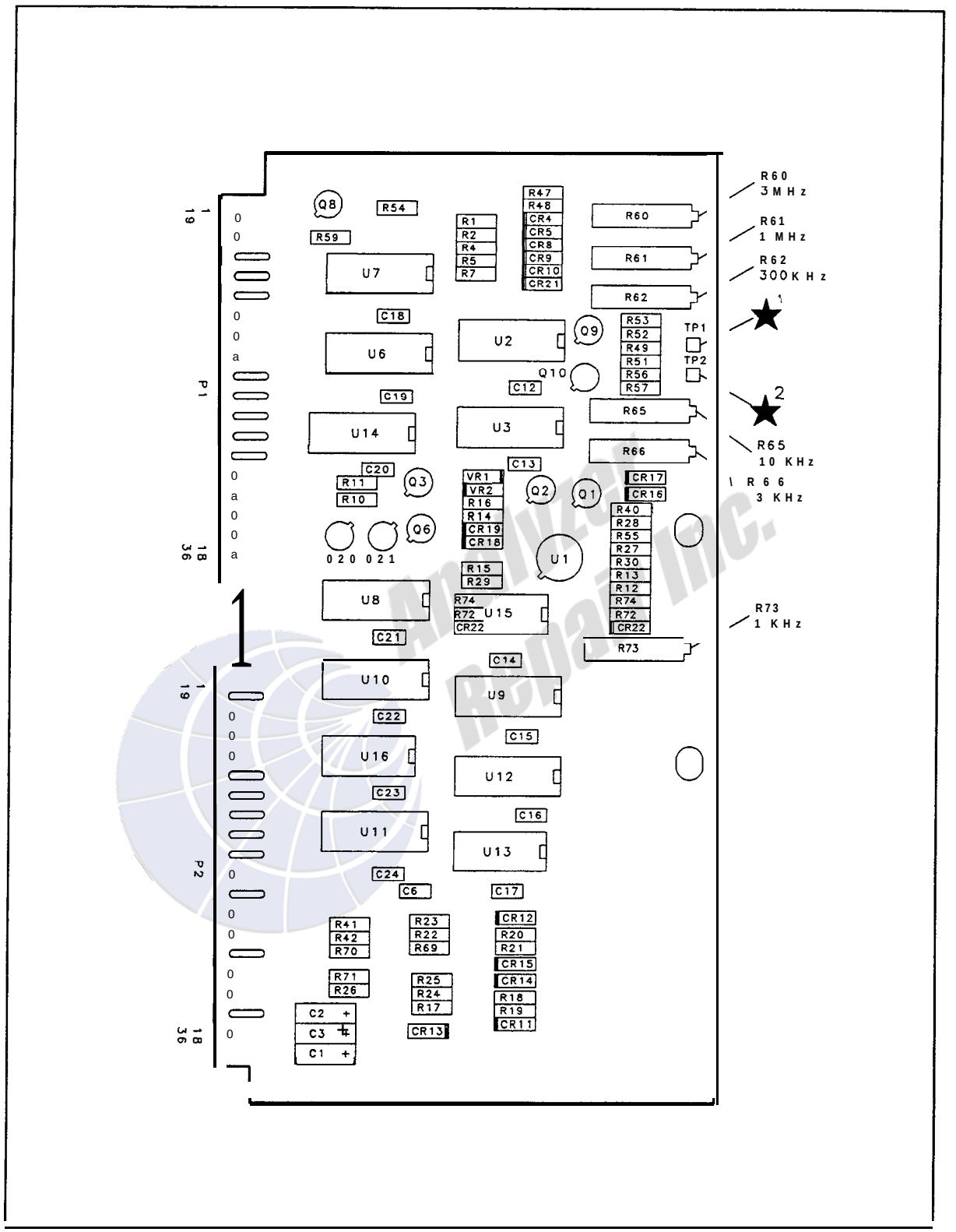

A4A9 IF Control Component Locations, 85662-60169

(Option 067 Tab)

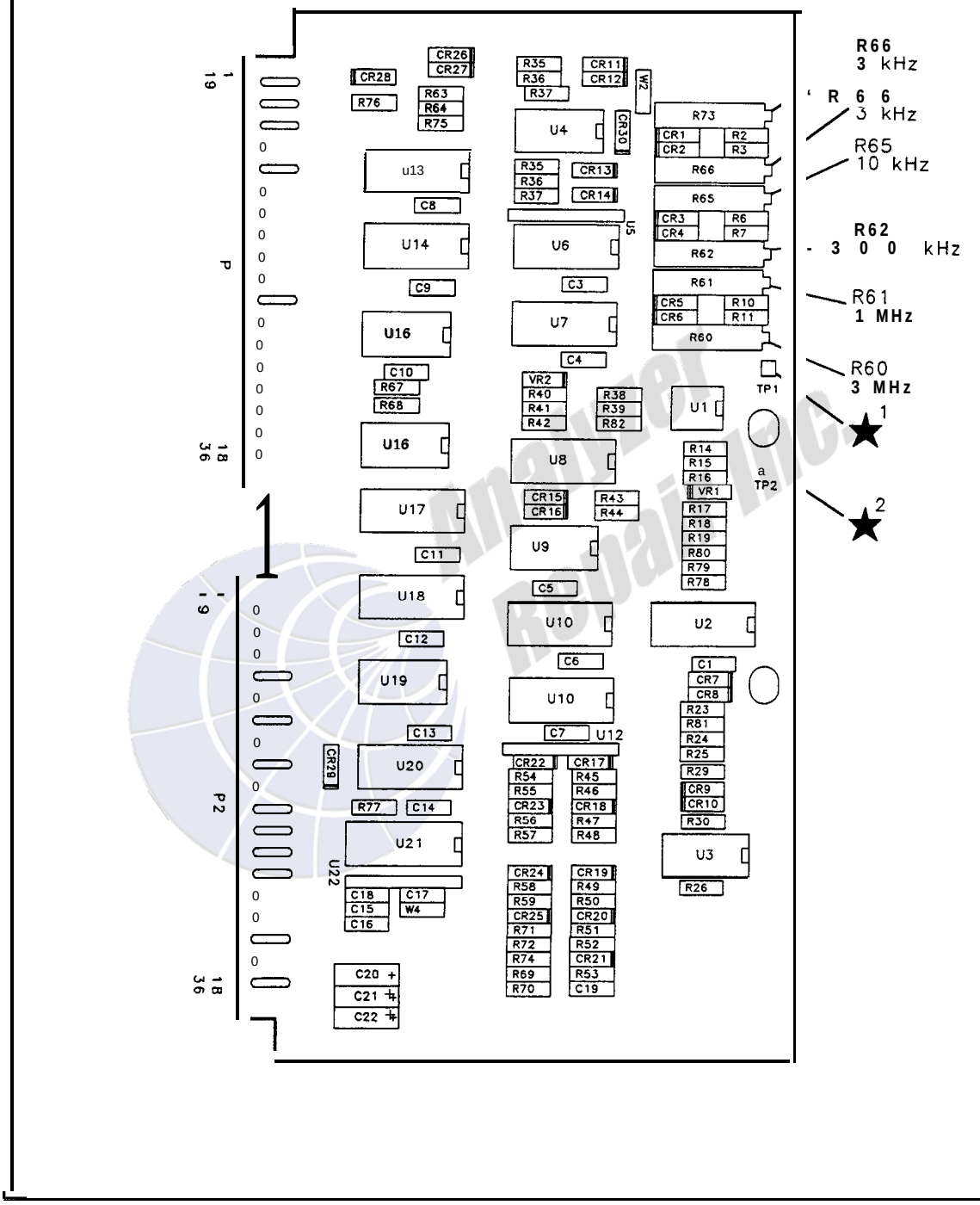

A4A9 IF Control Component Locations, 85662-60200

(Option 067 Tab)

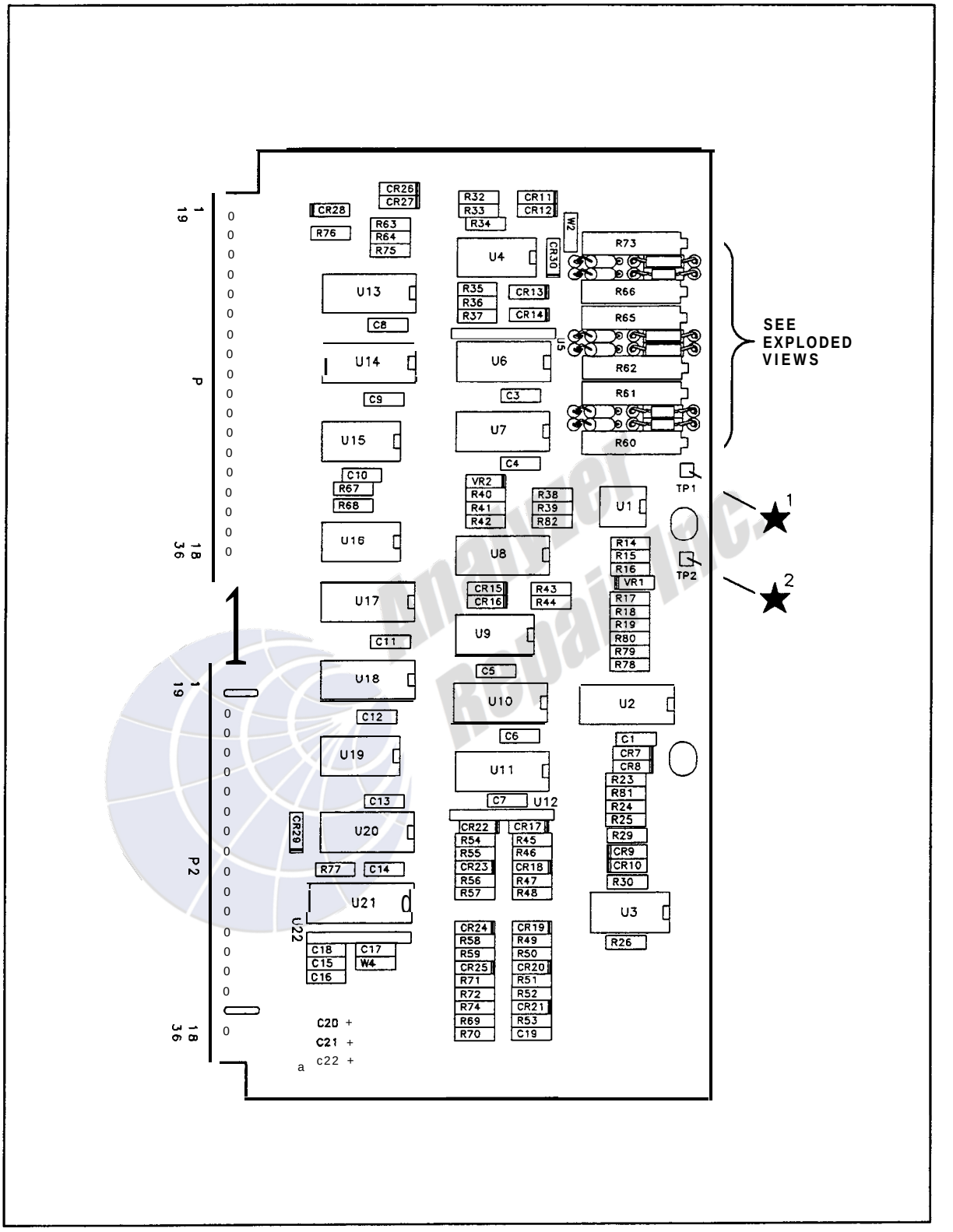

A4A9 IF Control Component Locations, 85662-60224 (1 of 2)

(Option 067 Tab)

EXPLODED VIEWS

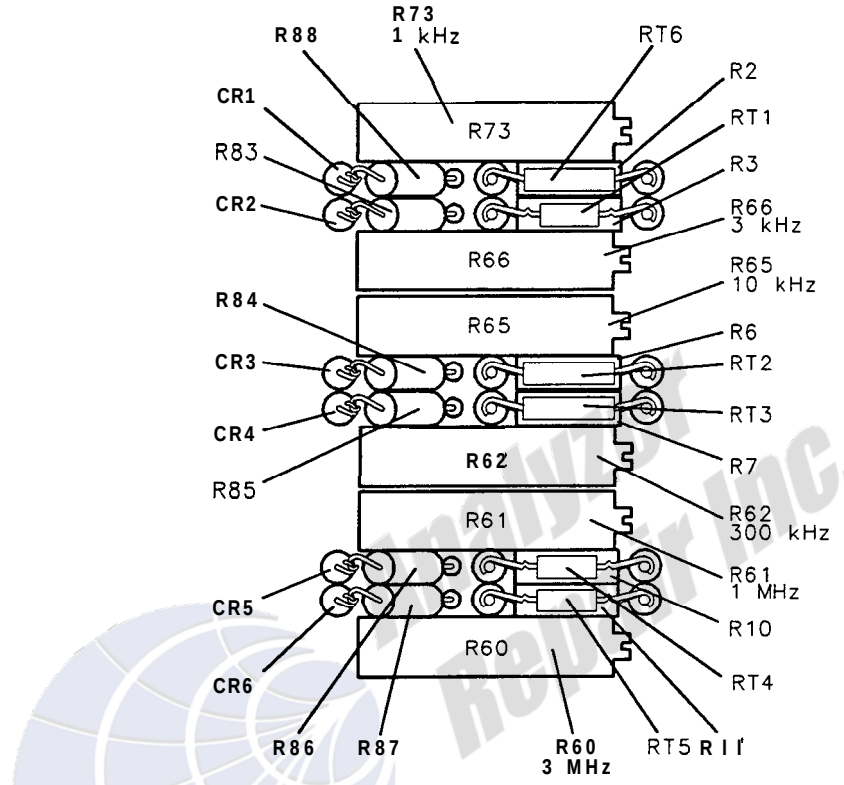

TOP VIEW

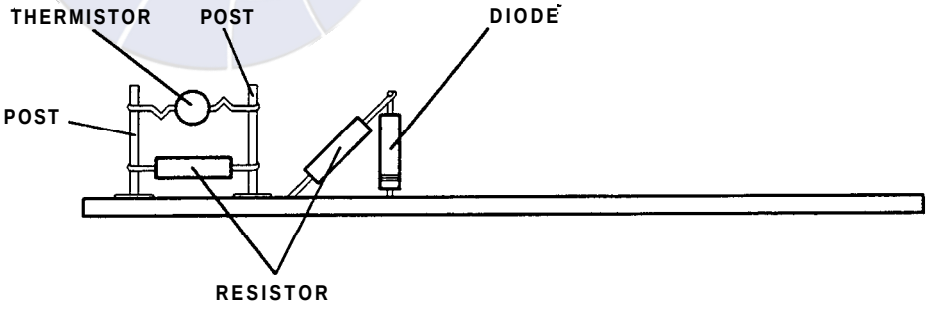

EXAMPLE OF COMPONENT LAYOUT, SIDE VIEW

A4A9 IF Control Component Locations, 85662-60224 (2 of 2)

(Option 067 Tab)

A4A9 IF CONTROL
85662-60169 (OPTION 067)
(SERIAL PREFIXES: 2542A – 2810A)

P1

PIN	SIGNAL	TO/FROM	FUNCTION BLOCK
1	REC CAL	A4A1P2-2	A
19	ALOG	A4A1P1-12	A
2	REC ZERO	A4A1P2-1	A
20	BLOG	A4A1P1-6	A
3	CRT DSBL	A1A6P1-7,25	A
21	BW8$	A4A4P1-10	E
4	BW7	A4A8P1-10	E
22	LTIO	A4A1DJ1-49	B
5	BW63	A4A8P1-11	E
23	ADR$	A4A1DJ1-23	B
6	A1$dB	A4A8P1-7	D
24	ADR2	A4A1DJ1-25	B
7	A2$dB	A4A8P1-8	D
25	ADR4	A4A1DJ1-27	B
8	SG2$-2	A4A5P1-10	D
26	ADR3	A4A1DJ1-28	B
9	SG2$-1	A4A5P1-9	D
27	ADR1	A4A1DJ1-24	B
10	SG1$	A4A5P1-8	D
28	10B12	A4A1DJ1-15	A
11	NC		G
29	10B14	A4A1DJ1-17	A
12	BW5	A4A8,A4A3, A4A4	E
30	10B15	A4A1DJ1-18	A
13	LOG/LIN	A4A2,A4A3	F
31	10B13	A4A1DJ1-16	A
14	OS1$	A4A1P1-8	D
32	VBWD	A4A1P1-2	A
15	OS2$-1	A4A1P1-9	D
33	VBWC	A4A1P1-3	A
16	OS2$-2	A4A1P1-10	D
34	VBWB	A4A1P1-4	A
17	GND		G
35	VBWA	A4A1P1-5	A
18	LG2$	A4A3P2-7	D
36	LG1$	A4A3P2-7	D

P2

PIN	SIGNAL	TO/FROM	FUNCTION BLOCK
1	10B11	A4A1DJ1-14	A
19	10B8	A4A1DJ1-9	A
2	10B9	A4A1DJ1-12	A
20	10B6	A4A1DJ1-11	A
3	10B7	A4A1DJ1-10	A
21	10B10$	A4A1DJ1-13	A
4	A4dB	A4A5P2-16	C
22	A2dB	A4A5P2-17	C
5	A8dB	A4A5P2-15	C
23	GND		G
6	GND		G
24	GND		G
7	AY$B	A4A5P1-6	C
25	10B5	A4A1DJ1-8	A
8	GND		G
26	10B3	A4A1DJ1-6	A
9	GND		G
27	10B1	A4A1DJ1-4	A
10	GND		G
28	10B2	A4A1DJ1-5	A
11	GND		G
29	10B2	A4A1DJ1-5	A
12	NC		G
30	10B4	A4A1DJ1-7	A
13	NC		G
31	GND		G
14	NC		G
32	GND		G
15	NC		G
33	GND		G
16	+5V		G
34	+5V		G
17	−15V		G
35	−15V		G
18	+15V		G
36	+15V		G

P2-28 10B$ … P2-21 10B10$ … P2-1 10B11 … P1-28 10B12 … P1-31 10B13 … P1-29 10B14 … P1-30 10B15 … P1-23 ADR$ … P1-27 ADR1 … P1-24 ADR2 … P1-26 ADR3 … P1-25 ADR4 … P1-22 LTIO

Ⓐ INPUT LATCHES

U11 (10B11 10B8 10B9 10B6 10B7 10B10$ 10B5 10B3 10B1 10B2 10B4) → A1 dB, A.4 dB, A.1 dB, A.2 dB, A.8 dB, A2 dB

U10 (10B6 10B7 10B10$ 10B11) → A4dB, A8dB → P1-35 VBWA, P1-32 VBWD, P1-33 VBWC, P1-34 VBWB

U3 (10B14 10B13 10B15 10B12) → RSWC, LRSWC, RSWD, LRSWD, RSWA, LRSWA

U6 (10B1$ 10B14 10B13 10B12 10B11) → P1-3 CRT DSBL, P1-20 B LOG, P1-19 A LOG, P1-1 REC CAL, P1-2 REC ZERO

U14A, Q8, R59 2810

U8 (10B8 10B5 10B7 10B6 10B9) → A1$ dB, SG1$, NC, SG2$-2, SG2$-1, A2$ dB

R10 2810, R11 2810

U9 (10B3 10B4 10B15 10B$ 10B2 10B1) → LG1$, LG2$, OS1$, OS2$-2, OS2$-1

U15E, U15B, U15F, C14 .01

Ⓑ ADDRESS DECODER

U7 (ADR$ ADR1 ADR3 EN) → LTIO, ADR3, ADR4

Ⓒ POWER SUPPLIES

P2-18,36 +15V → C1 2.2 → +15 VF
P2-16,34 +5V → C2 2.2 → +5 VF
P2-17,35 −15V → C3 2.2 → −15 VF
P1-17,P2-4,5,11,23,24,31-33 GND

Ⓒ A0.0–A15.9 DB CONTROL

U12 (C16 .01) → U13F, U13E, U13D, U13B, U13C

R20 10K, R18 10K, R17 10K, R21 10K, R19 10K; R23 82.5K, R29 38.3K, R26 31.6K, R22 23.7K, R24 16.2K, R69+ 133K, R71+ 237K; R70+ 464K; SEE NOTE 6

C12 .01, C13 .01, C17 .01, C6 .01

0.4 dB, 0.8 dB, 1 dB, 1.4 dB, 1.8 dB

R41 383K, R42 178K

U16D, U16F, U16B, U16A, U16C; 0.1 dB, 0.2 dB

P2-7 AY dB, P2-22 A2 dB, P2-4 A4 dB, P2-5 A8 dB

Ⓒ IF GAIN

U14F, U15C, U14D, U15D, U14E, U15E

R10 2810, R11 2810

Q21, Q20

P1-6 A1$ dB, P1-10 SG1$, P1-8 SG2$-2, P1-9 SG2$-1, P1-7 A2$ dB, P1-36 LG1$, P1-18 LG2$, P1-14 OS1$, P1-16 OS2$-2, P1-15 OS2$-1

Ⓔ BANDWIDTH CONTROL

U2 (LRSWC LRSWD LRSWB LRSWA)

C12 .01, R72 10K, R1 10K, R2 10K, R4 10K, R5 10K, R7 10K

R49 464K, R47 5110, R54 464K, R34 464K

CR4 3MHz CW, R60 2000, R51 1470
CR5 1 MHz CW, R61 10K, R52 2370
CR6 300 KHz CW, R62 50K, R53 23.7K
CR9 10 KHZ CW, R65 100K, R58 3160
CR10 3 KHz CW, R66 20K, R57 3850
CR22 1 KHz CW, R73 3K, R74 619

Q9, CR21, Q10, R48 1980

Q2, R30 5110, R40 12.1K, Q1, R55 10K −15 VF, R27 10K, R72 10K, R13 1000

R14 10K, R16 1300, Q3, VR2 14.7V, R15 10K, CR19, Q6, R26 750, CR18

U18, R28 51.9K, CR16, CR17, R69− 20K

P1-4 BW7, P1-5 BW63, P1-21 BW8$, P1-12 BW5

+14.8V FOR RES BW ≥100KHz
−0.8V FOR RES BW ≤30KHz

Ⓕ LOG LINEAR CONTROL

U1A, VR1 5.11V → P1-13 227mV/LOG <−10V=LIN

NOTES:

1. REFERENCE DESIGNATORS WITHIN THIS ASSEMBLY ARE ABBREVIATED. FOR COMPLETE REFERENCE DESIGNATION, PREFIX ABBREVIATION WITH ASSEMBLY DESIGNATION.
2. UNLESS OTHERWISE INDICATED: RESISTANCE IS IN OHMS (Ω); CAPACITANCE IS IN MICROFARADS (μF); INDUCTANCE IS IN MICROHENRIES (μH).
3. UNLESS OTHERWISE INDICATED: SIGNALS ENTER AT LEFT SIDE OR TOP AND EXIT AT RIGHT SIDE OR BOTTOM OF FUNCTION BLOCKS.
4. MNEMONIC TABLE:

MNEMONIC	DESCRIPTION
AY DB, A.1 DB, A.2 DB, A.4 DB, A.8 DB, A16 DB, A32 DB, A64 DB	ATTENUATOR STEPS FOR A4A5 STEP GAIN
A1$ DB, A2$ DB	ATTENUATOR STEPS FOR A4A8 ATTEN-RW FILTER
ADR$-4	INSTRUMENT BUS ADDRESS BITS
ALOG, BLOG	LOG EXPAND CONTROLS FOR A4A1 VIDEO PROCESSOR
BW5, BW7, BW63, BW8$	BANDWIDTH CONTROL LINES
10B$-15	INSTRUMENT BUS DATA BITS
LG1$, LG2$, LOG/LIN	LINEAR GAIN STEPS AND CONTROL FOR LOG AMPLIFIERS
LTIO	LOW = TOP BOX I/O
OS1$, OS2$-1, OS2$-2	OFFSET GAIN STEPS FOR A4A1 VIDEO PROCESSOR
REC CAL, REC ZERO	RECORDER CALIBRATE RECORDER ZERO
SG1$, SG2$-1, SG2$-2	STEP GAIN 10 DB, STEP GAIN 20 DB # 1, STEP GAIN 20 DB # 2
VBMA, VBWB, VBWC, VBWD	VIDEO BANDWITH CONTROL LINES

5. UNLESS OTHERWISE INDICATED LOGIC LEVELS ARE: +2.0V TO +6.0V = LOGIC '1' HIGH=H; 0V TO +0.8V = LOGIC '0' LOW=L=LSNK
6. R69+, R70+, AND R71+ ARE FACTORY-SELECTED COMPONENTS. TYPICAL VALUES ARE LISTED ON THE SCHEMATIC. ACCEPTABLE VALUES FOR THESE COMPONENTS ARE LISTED BELOW.

R69+	196KΩ–348KΩ
R70+	215KΩ–383KΩ
R71+	147KΩ–261KΩ

7. U13A, U14B, U14C, U14A, AND U16E ARE NOT USED.

A4A9

A4A9 IF CONTROL, SCHEMATIC DIAGRAM

Option H96

HP 85662A Option H96 is the IF-Display Section that is used with the HP 8568B Option E96 and the HP 8568B Option E44 Spectrum Analyzers. This option does not have 10 Hz and 3 MHz resolution bandwidths.

Option H96 Assemblies

The following Option H96 assemblies are covered in this manual:

A4A7 3 MHz Bandwidth Filter (85662-60174)

A4A9 IF Control (85662-60173, 85662-60201, 85662-60225)

A4A7 3 MHz Bandwidth Filter (85662-60174)

The parts list for this assembly is located in this section. The component locations and the schematic diagram for this assembly are located in A4A7 section of this manual.

A4A9 IF Control (85662-60173, 85662-60201, 85662-60225)

This assembly has three versions. Troubleshooting tables for the Option H96 A4A9 versions are located in this section. The parts lists and the component locations for each version are located in this section. The schematic diagram for 85662-60173 is also located in this section. The schematic diagram for the 85662-60201 and the schematic diagram for 85662-60225 are located in the A4A9 section of this manual.

Analyzer Repair Inc.

Tables 1 through 8 provide information that is useful in troubleshooting the A4A9 IF Control Assembly.

Table 1. 0.0 to -1.9 dB Control Truth Table
(Levels at Output of Latch U20)*

Control Line	Reference Level (dBm)																			
	0.0	−0.1	−0.2	−0.3	−0.4	−0.5	−0.6	−0.7	−0.8	−0.9	−1.0	−1.1	−1.2	−1.3	−1.4	−1.5	−1.6	−1.7	−1.8	−1.9
A.1 dB	H		H		H		H		H		H		H		H		H		H	
A.2 dB			H	H			H	H					H	H			H	H		
A.4 dB			H	H	H	H							H	H	H	H				
A.8 dB	H	H									H	H								
A1 dB	H	H	H	H	H	H	H	H	H	H										

• Latch U11 on early versions of A4A9 IF Control

Table 2.
0 to -9 dB Control Truth Table
(Levels at Output of Latches U18 and U20)*

Reference Level (dBm)	A2 dB	A4 dB	A8 dB
0 (−1)			H
−2 (−3)	H	H	
−4 (−5)		H	
−6 (−7)	H		
−8 (−9)			

• Latches U10 and U11 on early versions of A4A9 IF Control

Table 3. Resolution Bandwidth Truth Table

Resolution Bandwidth	RBW D	RBW C	RBW B	RBW A
1 MHz	H	H	H	
300 kHz	H	H		H
100 kHz	H	H		
30 kHz	H		H	H
10 kHz	H		H	
3 kHz	H			H
1 kHz		H	H	
300 Hz		H		H
100 Hz		H		
30 Hz			H	H

Analyzer Repair Inc.

Table 4. Video Bandwidth Truth Table

Video Bandwidth	VBW D	VBW C	VBW B	VBW A
3 MHz	H	H	H	H
1 MHz	H	H	H	
300 kHz	H	H		H
100 kHz	H	H		
30 kHz	H		H	H
10 kHz	H		H	
3 kHz	H			H
1 kHz		H	H	
300 Hz		H		H
100 Hz		H		
30 Hz			H	H
10 Hz			H	
3 Hz				H
1 Hz				

Analyzer Repair Inc.

Table 5. 10 dB Gain Step Truth Table (Levels at Output of Latches U10 and U17)*

Reference Level Res BW ≥3 kHz	dBm			−10	−20	−30	−40	−50	−60	−70	−80	−90	−100	−110
Reference Level Res BW ≤1 kHz	dBm	−10	−20	−30	−40	−50	−60	−70	−80	−90	−100	−110	−120	−130
A10 dB	Log		H											
	Lin		H											
A20 dB	Log	H												
	Lin	H												
SG10	Log				H		H		H	H	H	H	H	H
	Lin				H		H		H	H	H	H		
SG20-1	Log					H	H	H	H	H	H	H	H	H
	Lin					H	H	H	H	H	H	H		
SG20-2	Log							H	H	H	H	H	H	H
	Lin							H	H	H	H	H		
OS10	Log									H		H		H
	Lin													
OS20-1	Log										H	H	H	H
	Lin													
OS20-2	Log												H	H
	Lin													
LG10	Log													
	Lin									H		H		
LG20	Log													
	Lin										H	H		

Input attenuation setting at 0 dB; shift attenuator (for extended ranges).

* Latches U8 and U9 on early version of A4A9 IF Control.

Table 6. Bandwidth Control Lines (All Voltages Approximate)

Resolution Bandwidth	Control Links							
	BW 5	BW 63	BW 68	BW 7	Switch	300 Hz	100 Hz	30 Hz
1 MHz	+14.8 V	-14.0 V	-14.0 v	+13.1 v	+14.7 v	<-10 v	<-10 v	<-10 v
300 kHz	+14.8 V	I-14.0 V	I-14.0 V	+14.1 V	+14.7 v	<−10 V	<−10 V	<−10 V
100 kHz	+14.8 V	-14.0 v	-14.0 v	+14.5 v	+14.7 v	<-10 v	<−10 v	<-10 v
30 kHz	-0.6 V	+14.3 V	+14.3 V	+14.3 V	+14.7 V	<−10 V	<−10 V	<−10 V
10 kHz	−0.6 V	+9.3 V	+9.3 V	+14.3 V	+14.7 V	<−10 V	<−10 V	<−10 V
3 kHz	−0.6 V	+9.0 V	+9.0 V	+14.3 V	+14.7 V	<−10 V	<−10 V	<−10 V
1 kHz	−0.6 V	+14.3 V	+9.2 V	+14.3 V	+O.O V	<−10 V	<−10 V	<−10 V
300 Hz	-0.6 V	+14.3 V	+9.2 V	+14.3 V	+O.O V	>4 V	<-10 v	<−10 V
100 Hz	−0.6 V	+14.3 V	+9.2 V	+14.3 V	+O.O V	<−10 V	>-4 V	<−10 V
30 Hz	-0.6 V	+14.3 V	+9.2 V	+14.3 V	+O.O V	<−10 V	<−10 V	>4 V

Table 7. Address Line Truth Table

Address	ADR 4 (16)	ADR 3 (8)	ADR 2 (4)	ADR 1 (2)	ADR 0 (1)
Address 20	H	L	H	L	L
Address 21	H	L	H	L	H

Table 8. Log Expand Truth Table

dB/DIV	B Log	A Log
10		
5		H
2	H	
1	H	H

HP Part Number 85662-60174

A4A7 3 MHz Bandwidth Filter

Reference Designation	HP Part Number	C.	Qty	Description	Mfr Code	Mfr Part Number
A4A7	85662-60174	C	1	BOARD ASSEMBLY, 3MHZ BANDWIDTH FILTER (OPTION H96)	2848(	85662-60174
A4A7C1	0160-2055	C	1	CAPACITOR-FXD .01UF +80-20% 100VDC CER		805-504 Y5V 103Z
A4A7C2	0160-2266	4	1	CAPACITOR-FXD 24PF +-5% 500VDC CER 0+-30	5276:	2RDPLX05024RNP0
A4A7C3	0160-2055	C	1	CAPACITOR-FXD .01UF +80-20% 100VDC CER		805-504 Y5V 103Z
A4A7C4	0160-2250	6	1	CAP-FXD 5.1pF 500 V	5276:	
A4A7C5*	0160-4611	7	1	CAPACITOR-FXD 68PF +-1% 300VDC MICA -20/	09023	CD15ED680F03
A4A7C6	0121-0446	6	1	CAP-VAR 4.5pF 2pF 160 V	52763	302-450-502
A4A7C7	0121-0105	4	1	CAPACITOR-V TRMR-CER 9-35PF 200V PC-MTG	52762	304-324-573
A4A7C8	0160-2055	9	1	CAPACITOR-FXD .01UF +80-20% 100VDC CER		805-504 Y5V 1032
A4A7C9	0160-2055	9	1	CAPACITOR-FXD .01UF +80-20% 100VDC CER		805-504 Y5V 1032
A4A7C10	0160-2055	9	1	CAPACITOR-FXD .01UF +80-20% 100VDC CER		805-504 Y5V 103Z
A4A7C11	0160-2250	6	1	CAP-FXD 5.1pF 500 V	52763	
A4A7C12*	0160-4611	7	1	CAPACITOR-FXD 68PF +-1% 300VDC MICA -20/	09023	CD15ED680F03
A4A7C13	0121-0493	3	1	CAPACITOR-V TRMR-AIR 1.7-11PF 175V PC-MT	7497(	187-0306-125
A4A7C14	0121-0446	6	1	CAP-VAR 4.5pF 20pF 160 V	52763	302-450-502
A4A7C15	0121-0105	4	1	CAPACITOR-V TRMR-CER 9-35PF 200V PC-MTG	52763	304-324-573
A4A7C16	0160-2055	9	1	CAPACITOR-FXD .01UF +80-20% 100VDC CER		805-504 Y5V 103Z
A4A7C17	0160-2055	9	1	CAPACITOR-FXD .01UF +80-20% 100VDC CER		805-504 Y5V 103Z
A4A7C18	0160-2250	6	1	CAP-FXD 5.1pF 500 V	52763	
A4A7C19	0160-2250	6	1	CAP-FXD 5.1pF 500 V	52763	
A4A7C20	0160-2055	9	1	CAPACITOR-FXD .01UF +80-20% 100VDC CER		805-504 Y5V 103Z
A4A7C21*	0160-4611	7	1	CAPACITOR-FXD 68PF +-1% 300VDC MICA -20/	09023	CD15ED680F03
A4A7C22	3121-0493	3	1	CAPACITOR-V TRMR-AIR 1.7-11PF 175V PC-MT	74970	187-0306-125
A4A7C23	3121-0446	6	1	CAP-VAR 4.5pF 20pF 160 V	52763	302-450-502
A4A7C24	3121-0105	4	1	CAPACITOR-V TRMR-CER 9-35PF 200V PC-MTG	52763	304-324-573
A4A7C25	1160-2055	3	1	CAPACITOR-FXD .01UF +80-20% 100VDC CER		805-504 Y5V 1032
A4A7C26	)160-2055	3	1	CAPACITOR-FXD .01UF +80-20% 100VDC CER		805-504 Y5V 103Z
A4A7C27	1160-2250	5	1	:AP-FXD 5.1pF 500 V	52763	
A4A7C28	)160-2055	3	1	CAPACITOR-FXD .01UF +80-20% 100VDC CER		805-504 Y5V 1032
A4A7C29	1160-2250	5	1	CAP-FXD 5.1pF 500 V	52763	
A4A7C30*	)160-4611	7	1	CAPACITOR-FXD 68PF +-1% 3DOVDC MICA -20/	09023	CD15ED680F03
A4A7C31	1121-0493	3	1	CAPACITOR-V TRMR-AIR 1.7-11PF 175V PC-MT	74970	187-0306-125
A4A7C32	)121-0446	5	1	CAP-VAR 4.5pF 20pF 160 V	52763	302-450-502
A4A7C33	)121-0105	4	1	CAPACITOR-V TRMR-CER 9-35PF 200V PC-MTG	52763	304-324-573
A4A7C34	1160-2055	9	1	:APACITDR-FXD .01UF +BO-20% 100VDC CER		805-504 Y5V 1032
A4A7C35	)160-2055	9	1	CAPACITOR-FXD .01UF +80-20% 100VDC CER		805-504 Y5V 103Z
A4A7C36	)160-2250	5	1	:AP-FXD 5.1pF 500 V	52763	
A4A7C37	)160-2055	9	1	:APACITDR-FXD .01UF +80-20% 100VDC CER		805-504 Y5V 103Z
A4A7C38	)160-2250	5	1	:AP-FXD 5.1pF 500 V	52763	
A4A7C39*	)160-4611	7	1	CAPACITOR-FXD 6BPF +-1% 300VDC MICA -20/	09023	CD15ED680F03
A4A7C40	)121-0493	3	1	CAPACITOR-V TRMR-AIR 1.7-11PF 175V PC-MT	74970	187-0306-125
A4A7C41	)121-0446	5	1	:AP-VAR 4.5pF 20pF 160 V	52763	302-450-502
A4A7C42	)121-0105	I	1	CAPACITOR-V TRMR-CER 9-35PF 200V PC-MTG	52763	304-324-573
A4A7C43	)160-2055	9	1	CAPACITOR-FXD .01UF +80-20% 100VDC CER		805-504 Y5V 103Z
A4A7C44	)160-2244	3	1	:AP-FXD 3pF 500 V	52763	
A4A7C45	)160-2055	9	1	CAPACITOR-FXD .01UF +80-20% 100VDC CER		805-504 Y5V 103Z

**Indicates factory-selected value*

HP Part Number 85662-60174

A4A7 3 MHz Bandwidth Filter

Reference Designatior	HP Part Number	C D	Qty	Description	Mfr Code	Mfr Part Number
A4A7C46	0160-2055	9	1	CAPACITOR-FXD .01UF +BO-20% 100VDC CER		805-504 Y5V 103Z
A4A7C47	0160-2244	4	1	CAP-FXD 3pF 500 V	5276:	
A4A7C48	0160-4300		1	CAPACITOR-FXD .047UF +80-20% 100VDC CER		562CZC101AL473ZA26
A4A7C49	0180-0197	4	1	CAPACITOR-FXD 2.2UF+-10% 20VDC TA	56286	150D225X9020A2-DYS
A4A7C50	0180-0197	4	1	CAPACITOR-FXD 2.2UF+-10% POVDC TA	56289	150D225X9020A2-DYS
A4A7C51	0180-0197	4	1	CAPACITOR-FXD 2.2UF+-10% POVDC TA	56289	150D225X9020A2-DYS
A4A7C52	0180-0197	4	1	CAPACITOR-FXD 2.2UF+-10% 20VDC TA	56289	150D225X9020A2-DYS
A4A7C53	0180-0197	4	1	CAPACITOR-FXD 2.2UF+-10% 20VDC TA	56289	150D225X9020A2-DYS
A4A7C54	0180-0197	4	1	CAPACITOR-FXD 2.2UF+-10% POVDC TA	56289	150D225X9020A2-DYS
A4A7C55	0160-2055	9	1	CAPACITOR-FXD .01UF +80-20% 100VDC CER		805-504 Y5V 103Z
A4A7C56	0160-2055	9	1	CAPACITOR-FXD .01UF +BO-20% 100VDC CER		805-504 Y5V 103Z
A4A7C57	0160-4300	1	1	CAPACITOR-FXD .047UF +ao-20% 100VDC CER		562CZC101AL473ZA26
A4A7C58	0160-4297	5	1	CAPACITOR-FXD .022UF +BO-20% 100VDC CER		562CZC101AH223ZA23
A4A7C59	0160-2055	9	1	CAPACITOR-FXD .01UF +80-20% 100VDC CER		805-504 Y5V 1032
A4A7C60	0160-2055	9	1	CAPACITOR-FXD .01UF +80-20% 100VDC CER		805-504 Y5V 103Z
A4A7C61	0160-2055	9	1	CAPACITOR-FXD .01UF +80-20% 100VDC CER		805-504 Y5V 103Z
A4A7C62	0160-2055	9	1	CAPACITOR-FXD .01UF +80-20% 100VDC CER		805-504 Y5V 103Z
A4A7C63	0160-4300	1	1	CAPACITOR-FXD .047UF +80-20% 100VDC CER		562CZC101AL473ZA26
A4A7C64	0160-4297	5	1	CAPACITOR-FXD .022UF +ao-20% 100VDC CER		562CZC101AH223ZA23
A4A7C65	0160-2055	9	1	CAPACITOR-FXD .01UF +80-20% 100VDC CER		805-504 Y5V 103Z
A4A7C66	0160-2055	5	1	CAPACITOR-FXD .01UF +80-20% 100VDC CER		805-504 Y5V 103Z
A4A7C67	0160-2055	3	1	CAPACITOR-FXD .01UF +80-20% 100VDC CER		805-504 Y5V 1032
A4A7C68	0160-2055	3	1	CAPACITOR-FXD .01UF +80-20% 100VDC CER		805-504 Y5V 103Z
A4A7C69	0160-4300	1	1	CAPACITOR-FXD .047UF +ao-20% 100VDC CER		562CZC101AL473ZA26
A4A7C70	0160-4297	5	1	CAPACITOR-FXD .022UF +ao-20% 100VDC CER		562CZC101AH223ZA23
A4A7C71	3160-2055	3	1	CAPACITOR-FXD .01UF +80-20% 100VDC CER		805-504 Y5V 103Z
A4A7C72	0160-2055	3	1	CAPACITOR-FXD .01UF +BO-20% 100VDC CER		805-504 Y5V 103Z
A4A7C73	0160-2055	3	1	CAPACITOR-FXD .01UF +BO-20% 100VDC CER		805-504 Y5V 103Z
A4A7C74	0160-2055	9	1	CAPACITOR-FXD .01UF +80-20% 100VDC CER		805-504 Y5V 103Z
A4A7C75	0160-4300	1	1	CAPACITOR-FXD .047UF +BO-20% 100VDC CER		562CZC101AL473ZA26
A4A7C76	0160-4297	5	1	CAPACITOR-FXD .022UF +80-20% 100VDC CER		562CZC101AH223ZA23
A4A7C77	1160-2055	9	1	CAPACITOR-FXD .01UF +BD-20% 100VDC CER		805-504 Y5V 103Z
A4A7C78	0160-2055	9	1	CAPACITOR-FXD .01UF +BO-20% 100VDC CER		805-504 Y5V 103Z
A4A7C79	0160-2055	9	1	CAPACITOR-FXD .01UF +80-20% 100VDC CER		805-504 Y5V 1032
A4A7C80	0160-2055	9	1	CAPACITOR-FXD .01UF +80-20% 100VDC CER		805-504 Y5V 1032
A4A7C81	0160-4300	1	1	CAPACITOR-FXD .047UF +ao-20% 100VDC CER		562CZC101AL473ZA26
A4A7C82	0160-4297	5	1	CAPACITOR-FXD .022UF +ao-20% 100VDC CER		562CZC101AH223ZA23
A4A7C83	0160-2055	9	1	CAPACITOR-FXD .01UF +BO-20% 100VDC CER		805-504 Y5V 103Z
A4A7C84	0160-2055	9	1	CAPACITOR-FXD .01UF +BO-20% 100VDC CER		805-504 Y5V 1032
A4A7C85	0160-4300		1	CAPACITOR-FXD .047UF +ao-20% 100VDC CER		562CZC101AL473ZA26
A4A7C86	0160-4300		1	CAPACITOR-FXD .047UF +BO-20% 100VDC CER		562CZC101AL473ZA26
A4A7C87	0160-4300		1	CAPACITOR-FXD .047UF +BO-20% 100VDC CER		562CZC101AL473ZA26
A4A7C88	0160-4300		1	CAPACITOR-FXD .047UF +80-20% 100VDC CER		562CZC101AL473ZA26
A4A7C89	0160-4300		1	CAPACITOR-FXD .047UF +80-20% 100VDC CER		562CZC101AL473ZA26
A4A7C90	0160-4300		1	CAPACITOR-FXD .047UF +80-20% 100VDC CER		562CZC101AL473ZA26
A4A7C91	0160-4300		1	CAPACITOR-FXD .047UF +80-20% 100VDC CER		562CZC101AL473ZA26
A4A7C92	0160-4300		1	CAPACITOR-FXD .047UF +ao-20% 100VDC CER		562CZC101AL473ZA26
A4A7C93*	0160-2252	5	1	CAP-FXD 6.2pF 500 V	52763	

*Indicates factory-selected value

HP Part Number 85662-60174

A4A7 3 MHz Bandwidth Filter

Reference Designation	HP Part Number	C D	Qty	Description	Mfr Code	Mfr Part Number
A4A7CR1	1901-0040	1	1	DIODE-SWITCHING 30V 50MA 2NS DO-35	71468	
A4A7CR2	1901-0040	1	1	DIODE-SWITCHING 30V 50MA 2NS DO-35	71468	
A4A7CR3	1901-0040	1	1	DIODE-SWITCHING 30V 50MA 2NS DO-35	71468	
A4A7CR4	1901-0040	1	1	DIODE-SWITCHING 3DV 50MA 2NS DO-35	71468	
A4A7CR5	1901-0040	1	1	DIODE-SWITCHING 3DV 50MA 2NS DO-35	71468	
A4A7CR6	1901-0040	1	1	DIODE-SWITCHING 30V 50MA 2NS DO-35	71468	
A4A7CR7	1901-0040	1	1	DIODE-SWITCHING 30V 50MA 2NS DO-35	71468	
A4A7CR8	1901-0040	1	1	DIODE-SWITCHING 30V 50MA 2NS DO-35	71468	
A4A7CR9	1901-0040	1	1	DIODE-SWITCHING 30V 50MA 2NS DO-35	71468	
A4A7CR10	1901-0040	1	1	DIODE-SWITCHING 30V 50MA 2NS DO-35	71468	
A4A7CR11	1901-0040	1	1	DIODE-SWITCHING 30V 5DMA 2NS DO-35	71468	
A4A7CR12	1901-0040	1	1	DIODE-SWITCHING 30V 50MA 2NS DO-35	71468	
A4A7CR13	1901-0040	1	1	DIODE-SWITCHING 3DV 50MA 2NS DO-35	71468	
A4A7CR14	1901-0040	1	1	DIODE-SWITCHING 30V 50MA 2NS DO-35	71468	
A4A7CR15	1901-0040	1	1	DIODE-SWITCHING 30V 50MA 2NS DO-35	71468	
A4A7CR16	1901-0040	1	1	DIODE-SWITCHING 30V 50MA 2NS DO-35	71468	
A4A7CR17	1901-0040	1	1	DIODE-SWITCHING 30V 50MA 2NS DO-35	71468	
A4A7CR18	1901-0040	1	1	DIODE-SWITCHING 30V 50MA 2NS DO-35	71468	
A4A7CR19	1901-0040	1	1	DIODE-SWITCHING 30V 50MA 2NS DO-35	71468	
A4A7CR20	1901-0040	1	1	DIODE-SWITCHING 30V 50MA 2NS DO-35	71468	
A4A7CR21	1901-0040	1	1	DIODE-SWITCHING 30V 50MA 2NS DO-35	71468	
A4A7CR22	1901-0040	1	1	DIODE-SWITCHING 30V 50MA 2NS DO-35	71468	
A4A7CR23	1901-0040	1	1	DIODE-SWITCHING 30V 50MA 2NS DO-35	71468	
A4A7CR24	1901-0040	1	1	DIODE-SWITCHING 30V 50MA 2NS DO-35	71468	
A4A7CR25	1901-0040	1	1	DIODE-SWITCHING 30V 50MA 2NS DO-35	71468	
A4A7CR26	1901-0040	1	1	DIODE-SWITCHING 30V 50MA 2NS DO-35	71468	
A4A7CR27	1901-0040	1	1	DIODE-SWITCHING 30V 50MA 2NS DO-35	71468	
A4A7CR28	1901-0040	1	1	DIODE-SWITCHING 30V 50MA 2NS DO-35	71468	
A4A7CR29	1901-0040	1	1	DIODE-SWITCHING 30V 50MA 2NS DO-35	71468	
A4A7CR30	1901-0040	1	1	DIODE-SWITCHING 30V 50MA 2NS DO-35	71468	
A4A7E1	9170-0029	3	1	CORE-SHIELDING BEAD	02114	56-590-65A2/4A
A4A7E2	9170-0029	3	1	CDRE-SHIELDING BEAD	02114	56-590-65A2/4A
A4A7E3	9170-0029	3	1	CORE-SHIELDING BEAD	02114	56-590-65A2/4A
A4A7E4	9170-0029	3	1	CORE-SHIELDING BEAD	02114	56-590-65A2/4A
A4A7E5	9170-0029	3	1	CORE-SHIELDING BEAD	02114	56-590-65A2/4A
A4A7E6	9170-0029	3	1	CORE-SHIELDING BEAD	02114	56-590-65A2/4A
A4A7E7	9170-0029	3	1	CORE-SHIELDING BEAD	02114	56-590-65A2/4A
A4A7E8	9170-0029	3	1	CORE-SHIELDING BEAD	02114	56-590-65A2/4A
A4A7E9	9170-0029	3	1	CORE-SHIELDING BEAD	02114	56-590-65A2/4A
A4A7E10	9170-0029	3	1	CORE-SHIELDING BEAD	02114	56-590-65A2/4A
A4A7E11	9170-0029	3	1	CORE-SHIELDING BEAD	02114	56-590-65A2/4A
A4A7E12	9170-0029	3	1	CORE-SHIELDING BEAD	02114	56-590-65A2/4A
A4A7E13	9170-0029	3	1	CORE-SHIELDING BEAD	02114	56-590-65A2/4A
A4A7E14	9170-0029	3	1	CORE-SHIELDING BEAD	02114	56-590-65A2/4A
A4A7E15	9170-0029	3	1	CORE-SHIELDING BEAD	02114	56-590-65A2/4A
A4A7E16	9170-0029	3	1	CORE-SHIELDING BEAD	02114	56-590-65A2/4A
A4A7E17	9170-0029	3	1	CORE-SHIELDING BEAD	02114	56-590-65A2/4A

**Indicates factory-selected value*

HP Part Number 85662-60174

A4A7 3 MHz Bandwidth Filter

Reference Designatio	HP Part Number	C D	Qty	Description	Mfr Code	Mfr Part Number
A4A7E18	9170-0029		1	CORE-SHIELDING BEAD	0211	56-590-65A2/4A
A4A7E19	9170-0029		1	CORE-SHIELDING BEAD	0211	56-590-65A2/4A
A4A7E20	9170-0029		1	CORE-SHIELDING BEAD	0211	56-590-65A2/4A
A4A7E21	9170-0029		1	CORE-SHIELDING BEAD	0211	56-590-65A2/4A
A4A7E22	9170-0029		1	CORE-SHIELDING BEAD	0211	56-590-65A2/4A
A4A7L1	9100-1643		1	INDUCTOR RF-CH-MLD 300UH +-5% .2D-INX.4	9980	2500-02
A4A7L2	9100-1648		1	INDUCTOR RF-CH-ML0 560UH +-5% .2D-INX.4	9980	2500-16
A4A7L3	9100-1629		1	INDUCTOR RF-CH-MLD 47UH +-5% .166D-INX.3	99801	1537-60
A4A7L4	9100-1643		1	INDUCTOR RF-CH-MLD 300UH +-5% .2D-INX.4	9980	2500-02
A4A7L5	9100-1648		1	INDUCTOR RF-CH-MLD 560UH +-5% .2D-INX.4	9980	2500-16
A4A7L6	9100-1629		1	INDUCTOR RF-CH-MLD 47UH +-5% .166D-INX.3	99800	1537-60
A4A7L7	9100-1643		1	INDUCTOR RF-CH-MLD 300UH +-5% .2D-INX.4	99800	2500-02
A4A7L8	9100-1648		1	INDUCTOR RF-CH-MLD 560UH +-5% .2D-INX.4	99800	2500-16
A4A7L9	9100-1629		1	INDUCTOR RF-CH-MLD 47UH +-5% .166D-INX.3	99800	1537-60
A4A7L10	9100-1643		1	INDUCTOR RF-CH-ML0 300UH +-5% .2D-INX.4	99800	2500-02
A4A7L11	9100-1648		1	INDUCTOR RF-CH-ML0 560UH +-5% .2D-INX.45	99800	2500-16
A4A7L12	9100-1629	4	1	INDUCTOR RF-CH-ML0 47UH +-5% .166D-INX.3	99800	1537-60
A4A7L13	9100-1643	4	1	INOUCTOR RF-CH-MLD 300UH +-5% .2D-INX.45	99800	2500-02
A4A7L14	9100-1648	4	1	INDUCTOR RF-CH-MLD 560UH +-5% .2D-INX.45	99800	2500-16
A4A7L15	9100-1629	4	1	INDUCTOR RF-CH-MLD 47UH +-5% .166D-INX.3	99800	1537-60
A4A7L16	9100-1643	2	1	INDUCTOR RF-CH-MLD 300UH +-5% .2D-INX.45	99800	2500-02
A4A7L17	9140-0114	4	1	INDUCTOR RF-CH-ML0 10UH +-10% .166D-INX.	99800	1537-36
A4A7L18	9140-0114	4	1	INDUCTOR RF-CH-MLD 10UH +-10% .166D-INX.	99800	1537-36
A4A7L19	9140-0114	4	1	INDUCTOR RF-CH-MLD 10UH +-10% .166D-INX.	99800	1537-36
A4A7L20	9140-0114	4	1	INDUCTOR RF-CH-MLD 10UH +-10% .166D-INX.	99800	1537-36
A4A7L21	9140-0114	4	1	INDUCTOR RF-CH-MLD 10UH +-10% .166D-INX.	99800	1537-36
A4A7L22	3140-0114	4	1	INDUCTOR RF-CH-MLD 10UH +-10% .166D-INX.	99800	1537-36
A4A7MP2				NOT ASSIGNED		
A4A7MP4	5960-0069	3	1	SCLUG-HOLE CNCL-HD FOR .125-D-HOLE NYL	02768	207-080501-00-0101
A4A7MP5	5960-0069	3	1	SCLUG-HOLE CNCL-HD FOR .125-D-HOLE NYL	02768	207-080501-00-0101
A4A7Q1	1853-0034	3	1	STRANSISTOR PNP SI TO-18 PD=360MW	04713	
A4A7Q2	1855-0081	L	1	STRANSISTOR J-FET N-CHAN D-MODE SI	34677	
A4A7Q3	1854-0882	3	1	STRANSISTOR NPN PD=300MW FT=200MHZ	56289	
A4A7Q4	1854-0023	9	1	STRANSISTOR NPN SI TO-18 PD=360MW	25403	
A4A7Q5	1853-0034	D	1	STRANSISTOR PNP SI TO-18 PD=360MW	04713	
A4A7Q6	1855-0081	L	1	RANSISTOR J-FET N-CHAN D-MODE SI	34677	
A4A7Q7	1854-0882	3	1	RANSISTOR NPN PD=300MW FT=200MHZ	56289	
A4A7Q8	1854-0023	9	1	RANSISTOR NPN SI TO-18 PD=360MW	25403	
A4A7Q9	1853-0034	D	1	RANSISTOR PNP SI TO-18 PD=360MW	04713	
A4A7Q10	1855-0081		1	RANSISTOR J-FET N-CHAN D-MODE SI	34677	
A4A7Q11	1854-0882	8	1	TRANSISTOR NPN PD=300MW FT=200MHZ	56289	
A4A7Q12	1854-0023	9	1	TRANSISTOR NPN SI TO-18 PD=360MW	25403	
A4A7Q13	1853-0034	C	1	STRANSISTOR PNP SI TO-18 PD=360MW	04713	
A4A7Q14	1855-0081	1	1	STRANSISTOR J-FET N-CHAN D-MODE SI	34677	
A4A7Q15	1854-0882	8	1	STRANSISTOR NPN PD=300MW FT=200MHZ	56289	
A4A7Q16	1854-0023	9	1	STRANSISTOR NPN SI TO-18 PD=360MW	25403	
A4A7Q17	1853-0034	D	1	STRANSISTOR PNP SI TO-18 PD=360MW	04713	
A4A7Q18	1855-0081	L	1	STRANSISTOR J-FET N-CHAN D-MODE SI	34677	

**Indicates factory-selected value*

HP Part Number 85662160174

A4A7 3 MHz Bandwidth Filter

Reference Designation	HP Part Number	C D	Qty	Description	Mfr Code	Mfr Part Number
A4A7Q19	1854-0023	9	1	TRANSISTOR NPN SI TO-18 PD=360MW	25403	
A4A7Q20	1854-0882	8	1	TRANSISTOR NPN PD=300MW FT=200MHZ	56289	
A4A7Q21	1853-0034	0	1	TRANSISTOR PNP SI TO-18 PD=360MW	04713	
A4A7Q22	1854-0345	8	1	TRANSISTOR NPN 215179 SI TO-72 PD=200MW	04713	215179
A4A7R1	0757-0441	8	1	RESISTOR 8.25K +-1% .125W TF TC=0+-100	19701	SFR25H
A4A7R2	0757-0442	9	1	RESISTOR 10K +-1% .125W TF TC=0+-100	19701	SFR25H
A4A7R3	0757-0346	2	1	RESISTOR 10 +-1% .125W TF TC=0+-100	91637	CMF-55-1. T-l
A4A7R4	0757-0401	0	1	RESISTOR 100 +-1% .125W TF TC=0+-100	19701	SFR25H
A4A7R5	0757-0394	0	1	RESISTOR 51.1 +-1% .125W TF TC=0+-100	19701	SFR25H
A4A7R6	0698-3154	0	1	RESISTOR 4.221: 1% .125W TF TC=0+-100	19701	SFR25H
A4A7R7	0757-0280	3	1	RESISTOR 1K +-1% .125W TF TC=0+-100	19701	SFR25H
A4A7R8	0757-0346	2	1	RESISTOR 10 +-1% .125W TF TC=0+-100	91637	CMF-55-1, T-l
A4A7R9	0757-0397	3	1	RESISTOR 68.1 +-1% .125W TF TC=0+-100	19701	SFR25H
A4A7R10	0698-3447	4	1	RESISTOR 422 1% .125W TF TC=0+-100	19701	SFR25H
A4A7R11	0757-0420	3	1	RESISTOR 750 +-1% .125W TF TC=0+-100	19701	SFR25H
A4A7R12*	0757-0444	1	1	RESISTOR 12.1K +-1% .125W TF TC=0+-100	19701	SFR25H
A4A7R13*	0757-0444	1	1	RESISTOR 12.1K +-1% .125W TF TC=0+-100	19701	SFR25H
A4A7R14	0757-0401	0	1	RESISTOR 100 +-1% .125W TF TC=0+-100	19701	SFR25H
A4A7R15	0757-0405	4	1	RESISTOR 162 +-1% .125W TF TC=0+-100	19701	SFR25H
A4A7R16	0757-0394	0	1	RESISTOR 51.1 +-1% .125W TF TC=0+-100	19701	SFR25H
A4A7R17	0698-3154	0	1	RESISTOR 4.22K 1% .125W TF TC=0+-100	19701	SFR25H
A4A7R18	0757-0280	3	1	RESISTOR 1K +-1% .125W TF TC=0+-100	19701	SFR25H
A4A7R19	0757-0346	2	1	RESISTOR 10 +-1% .125W TF TC=0+-100	91637	CMF-55-1. T-l
A4A7R20	0757-0401	0	1	RESISTOR 100 +-1% .125W TF TC=0+-100	19701	SFR25H
A4A7R21	0698-3447	4	1	RESISTOR 422 1% .125W TF TC=0+-100	19701	SFR25H
A4A7R22	0757-0420	3	1	RESISTOR 750 +-1% .125W TF TC=0+-100	19701	SFR25H
A4A7R23*	0757-0444	1	1	RESISTOR 12.1K +-1% .125W TF TC=0+-100	19701	SFR25H
A4A7R24*	0757-0444	1	1	RESISTOR 12.1K +-1% .125W TF TC=0+-100	19701	SFR25H
A4A7R25	0757-0416	7	1	RESISTOR 511 +-1% .125W TF TC=0+-100	19701	SFR25H
A4A7R26	0757-0405	4	1	RESISTOR 162 +-1% .125W TF TC=0+-100	19701	SFR25H
A4A7R27	0757-0394	0	1	RESISTOR 51.1 +-1% .125W TF TC=0+-100	19701	SFR25H
A4A7R28	0698-3154	0	1	RESISTOR 4.221: 1% .125W TF TC=0+-100	19701	SFR25H
A4A7R29	0757-0280	3	1	RESISTOR 1K +-1% .125W TF TC=0+-100	19701	SFR25H
A4A7R30	2100-3426	6	1	RESISTOR-TRMR 20 10% TKF SIDE-ADJ 1-TRN	32997	3386X-146-200
A4A7R31	0757-0401	0	1	RESISTOR 100 +-1% .125W TF TC=0+-100	19701	SFR25H
A4A7R32	0698-3447	4	1	RESISTOR 422 1% .125W TF TC=0+-100	19701	SFR25H
A4A7R33	0757-0420	3	1	RESISTOR 750 +-1% .125W TF TC=0+-100	19701	SFR25H
A4A7R34*	0757-0444	1	1	RESISTOR 12.1K +-1% .125W TF TC=0+-100	19701	SFR25H
A4A7R35*	0757-0444	1	1	RESISTOR 12.1K +-1% .125W TF TC=0+-100	19701	SFR25H
A4A7R36	0757-0416	7	1	RESISTOR 511 +-1% .125W TF TC=0+-100	19701	SFR25H
A4A7R37	0757-0405	4	1	RESISTOR 162 +-1% .125W TF TC=0+-100	19701	SFR25H
A4A7R38	0757-0394	0	1	RESISTOR 51.1 +-1% .125W TF TC=0+-100	19701	SFR25H
A4A7R39	0698-3154	0	1	RESISTOR 4.221: 1% .125W TF TC=0+-100	19701	SFR25H
A4A7R40	0757-0280	3	1	RESISTOR 1K +-1% .125W TF TC=0+-100	19701	SFR25H
A4A7R41	2100-3426	6	1	RESISTOR-TRMR 20 10% TKF SIDE-ADJ 1-TRN	32997	3386X-Y46-200
A4A7R42	0757-0401	0	1	RESISTOR 100 +-1% .125W TF TC=0+-100	19701	SFR25H
A4A7R43	0698-3447	4	1	RESISTOR 422 1% .125W TF TC=0+-100	19701	SFR25H

**Indicates factory-selected value*

HP Part Number 85662-60174
A4A7 3 MHz Bandwidth Filter

Reference Designation	HP Part Number	CD	Qty	Description	Mfr Code	Mfr Part Number
A4A7R44	0757-0420	3	1	RESISTOR 750 +-1% .125W TF TC=0+-100	19701	SFR25H
A4A7R45*	0757-0444	1	1	RESISTOR 12.1K +-1% .125W TF TC=D+-100	19701	SFR25H
A4A7R46*	0757-0444	1	1	RESISTOR 12.1K +-1% .125W TF TC=0+-100	19701	SFR25H
A4A7R47	0757-0416	7	1	RESISTOR 511 +-1% .125W TF TC=D+-100	19701	SFR25H
A4A7R48	0757-0405	4	1	RESISTOR 162 +-1% .125W TF TC=0+-100	19701	SFR25H
A4A7R49	0757-0394	0	1	RESISTOR 51.1 +-1% .125W TF TC=0+-100	19701	SFR25H
A4A7R50	0698-3154	0	1	RESISTOR 4.221: 1% .125W TF TC=0+-100	19701	SFR25H
A4A7R51	0757-0280	3	1	RESISTOR 1K +-1% .125W TF TC=D+-100	19701	SFR25H
A4A7R52	0757-0346	2	1	RESISTOR 10 +-1% .125W TF TC=0+-100	91637	CMF-55-1. T-l
A4A7R53	0757-0401	0	1	RESISTOR 100 +-1% .125W TF TC=0+-100	19701	SFR25H
A4A7R54	0698-3447	4	1	RESISTOR 422 1% .125W TF TC=0+-100	19701	SFR25H
A4A7R55	0757-0420	3	1	RESISTOR 750 +-1% .125W TF TC=0+-100	19701	SFR25H
A4A7R56*	0757-0443	D	1	RESISTOR 11K +-1% .125W TF TC=0+-100	19701	SFR25H
A4A7R57*	0757-0443	0	1	RESISTOR 11K +-1% .125W TF TC=0+-100	19701	SFR25H
A4A7R58	0757-0405	4	1	RESISTOR 162 +-1% .125W TF TC=0+-100	19701	SFR25H
A4A7R59	0698-3438	3	1	RESISTOR 147 1% .125W TF TC=0+-100	19701	SFR25H
A4A7R60*	0698-3435	0	1	RESISTOR 38.3 1% .125W TF TC=0+-100	19701	SFR25H
A4A7R61	0698-3447	4	1	RESISTOR 422 1% .125W TF TC=D+-100	19701	SFR25H
A4A7R62	0698-3435	0	1	RESISTOR 38.3 1% .125W TF TC=0+-100	19701	SFR25H
A4A7R63	0757-0401	0	1	RESISTOR 100 +-1% .125W TF TC=0+-100	19701	SFR25H
A4A7R64	0757-0401	0	1	RESISTOR 100 +-1% .125W TF TC=0+-100	19701	SFR25H
A4A7R65	0757-0401	0	1	RESISTOR 100 +-1% .125W TF TC=0+-100	19701	SFR25H
A4A7R66*	0757-0394	0	1	RESISTOR 51.1 +-1% .125W TF TC=0+-100	19701	SFR25H
A4A7R67	0698-3443	0	1	RESISTOR 287 1% .125W TF TC=0+-100	19701	SFR25H
A4A7R68*	0698-3437	2	1	RESISTOR 133 1% .125W TF TC=0+-100	19701	SFR25H
A4A7R69	0698-0082	7	1	RESISTOR 464 1% .125W TF TC=0+-100	19701	SFR25H
A4A7R70*	0698-0082	7	1	RESISTOR 464 1% .125W TF TC=0+-100	19701	SFR25H
A4A7R71	0757-0416	7	1	RESISTOR 511 +-1% .125W TF TC=0+-100	19701	SFR25H
A4A7R72*	0698-0083	8	1	RESISTOR 1.96K 1% .125W TF TC=0+-100	19701	SFR25H
A4A7R73	0757-0416	7	1	RESISTOR 511 +-1% .125W TF TC=0+-100	19701	SFR25H
A4A7R74*	0757-0395	1	1	RESISTOR 56.2 +-1% .125W TF TC=0+-100	19701	SFR25H
A4A7R75	0698-3443	0	1	RESISTOR 287 1% .125W TF TC=0+-100	19701	SFR25H
A4A7R76*	0698-3437	2	1	RESISTOR 133 1% .125W TF TC=0+-100	19701	SFR25H
A4A7R77	0698-0082	7	1	RESISTOR 464 1% .125W TF TC=0+-100	19701	SFR25H
A4A7R78*	0698-0082	7	1	RESISTOR 464 1% .125W TF TC=0+-100	19701	SFR25H
A4A7R79	0757-0416	7	1	RESISTOR 511 +-1% .125W TF TC=0+-100	19701	SFR25H
A4A7R80*	0698-0083	8	1	RESISTOR 1.96K 1% .125W TF TC=0+-100	19701	SFR25H
A4A7R81	0757-0416	7	1	RESISTOR 511 +-1% .125W TF TC=0+-100	19701	SFR25H
A4A7R82*	0757-0395	1	1	RESISTOR 56.2 +-1% .125W TF TC=0+-100	19701	SFR25H
A4A7R83	0698-3443	0	1	RESISTOR 287 1% .125W TF TC=0+-100	19701	SFR25H
A4A7R84*	0698-3437	2	1	RESISTOR 133 1% .125W TF TC=0+-100	19701	SFR25H
A4A7R85	0698-0082	7	1	RESISTOR 464 1% .125W TF TC=0+-100	19701	SFR25H
A4A7R86*	0757-0416	7	1	RESISTOR 511 +-1% .125W TF TC=0+-100	19701	SFR25H
A4A7R87	0757-0416	7	1	RESISTOR 511 +-1% .125W TF TC=0+-100	19701	SFR25H
A4A7R88*	0698-0083	8	1	RESISTOR 1.96K 1% .125W TF TC=0+-100	19701	SFR25H
A4A7R89	0757-0416	7	1	RESISTOR 511 +-1% .125W TF TC=0+-100	19701	SFR25H
A4A7R90*	0757-0395	1	1	RESISTOR 56.2 +-1% .125W TF TC=0+-100	19701	SFR25H
A4A7R91	0698-3443	0	1	RESISTOR 287 1% .125W TF TC=0+-100	19701	SFR25H

**Indicates factory-selected value*

HP Part Number 85662-60174

A4A7 3 MHz Bandwidth Filter

Reference Designation	HP Part Number	CD	Qty	Description	Mfr Code	Mfr Part Number
A4A7R92*	0698-3437	2	1	RESISTOR 133 1% .125W TF TC=0+-100	19701	SFR25H
A4A7R93	0698-0082	7	1	RESISTOR 464 1% .125W TF TC=0+-100	19701	SFR25H
A4A7R94*	0757-0416	7	1	RESISTOR 511 +-1% .125W TF TC=0+-100	19701	SFR25H
A4A7R95	0757-0416	7	1	RESISTOR 511 +-1% .125W TF TC=0+-100	19701	SFR25H
A4A7R96*	0698-0083	a	1	RESISTOR 1.96K 1% .125W TF TC=0+-100	19701	SFR25H
A4A7R97	0757-0416	7	1	RESISTOR 511 +-1% .125W TF TC=0+-100	19701	SFR25H
A4A7R98*	0757-0394	a	1	RESISTOR 51.1 +-1% .125W TF TC=0+-100	19701	SFR25H
A4A7R99	0698-3443	0	1	RESISTOR 287 1% .125W TF TC=0+-100	19701	SFR25H
A4A7R100*	0698-3437	2	1	RESISTOR 133 1% .125W TF TC=0+-100	19701	SFR25H
A4A7R101	0698-0082	7	1	RESISTOR 464 1% .125W TF TC=0+-100	19701	SFR25H
A4A7R102*	0757-0416	7	1	RESISTOR 511 +-1% .125W TF TC=0+-100	19701	SFR25H
A4A7R103	0757-0416	7	1	RESISTOR 511 +-1% .125W TF TC=0+-100	19701	SFR25H
A4A7R104*	0698-0083	8	1	RESISTOR 1.96K 1% .125W TF TC=D+-100	19701	SFR25H
A4A7R105	0757-0416	7	1	RESISTOR 511 +-1% .125W TF TC=0+-100	19701	SFR25H
A4A7R106	0757-0465	6	1	RESISTOR 100K +-1% .125W TF TC=0+-100	19701	SFR25H
A4A7R107	0757-0465	6	1	RESISTOR 100K +-1% .125W TF TC=0+-100	19701	SFR25H
A4A7R108	0757-0465	6	1	RESISTOR 100K +-1% .125W TF TC=0+-100	19701	SFR25H
A4A7R109	0757-0465	6	1	RESISTOR 100K +-1% .125W TF TC=0+-100	19701	SFR25H
A4A7TP1	0360-1788	7	1	CONNECTOR-SGL CONT PIN .045-IN-BSC-SZ SQ	04574	
A4A7TP2	0360-1788	7	1	CONNECTOR-SGL CONT PIN .045-IN-BSC-SZ SQ	04574	
A4A7TP3	0360-1788	7	1	CONNECTOR-SGL CONT PIN .045-IN-BSC-SZ SQ	04574	
A4A7TP4	0360-1788	7	1	CONNECTOR-SGL CONT PIN .045-IN-BSC-SZ SQ	04574	
A4A7TP5	0360-1788	7	1	CONNECTOR-SGL CONT PIN .045-IN-BSC-SZ SQ	04574	
A4A7TP6	0360-1788	7	1	CONNECTOR-SGL CONT PIN .045-IN-BSC-SZ SQ	04574	
A4A7TP7	0360-1788	7	1	CONNECTOR-SGL CONT PIN .045-IN-BSC-SZ SQ	04574	
A4A7TP8	0360-1788	7	1	CONNECTOR-SGL CONT PIN .045-IN-BSC-SZ SQ	04574	
A4A7TP9	0360-1788	7	1	CONNECTOR-SGL CONT PIN .045-IN-BSC-SZ SQ	04574	
A4A7TP10	0360-1788	7	1	CONNECTOR-SGL CONT PIN .045-IN-BSC-SZ SQ	04574	
A4A7Y1	0410-0404	9	1	CRYSTAL-QUARTZ, PART OF A MATCHED SET OF FIVE, INCLUDES A4A7Y1-A4A7Y5	00136	
A4A7Y2		9	1	CRYSTAL-QUARTZ, PART OF A MATCHED SET OF FIVE, INCLUDES A4A7Y1-A4A7Y5 (REFER TO A4A7Y1)		
A4A7Y3		9	1	CRYSTAL-QUARTZ PART OF A MATCHED SET OF FIVE. INCLUDES A4A7Y1-A4A7Y5 (REFER TO A4A7Y1)		
A4A7Y4		9	1	CRYSTAL-QUARTZ PART OF A MATCHED SET OF FIVE, INCLUDES A4A7Y1-A4A7Y5 (REFER TO A4A7Y1)		
A4A7Y5		9	1	CRYSTAL-QUARTZ PART OF A MATCHED SET OF FIVE, INCLUDES A4A7Y1-A4A7Y5 (REFER TO A4A7Y1)		

**Indicates factory-selected value*

HP Part Number 85662-60173

A4A9 IF Control

Reference Designation	HP Part Number	CD	Qty	Description	Mfr Code	Mfr Part Number
A4A9	85662-60173	8	1	BOARD ASSEMBLY. IF CONTROL (OPTION H96) (SERIAL PREFIXES: 2517A-2810A)	28480	85662-60173
A4A9C1	0180-0197	8	1	CAP-FXD 2.2uF 20 V TA	56289	150D225X9020A2-DYS
A4A9C2	0180-0197	8	1	CAP-FXD 2.2uF 20 V TA	56289	150D225X9020A2-DYS
A4A9C3	0180-0197	8	1	CAP-FXD 2.2uF 20 V TA	56289	150D225X9020A2-DYS
A4A9C4	0180-0197	a	1	CAP-FXD 2.2uF 20 V TA	56289	150D225X9020A2-DYS
A4A9C6	0160-4832	4	1	CAPACITOR-FXD .01UF +-10% 100VDC CER	04222	SA101C103KAAH
A4A9C7	0160-3878	6	1	CAP-FXD 1000pF 100 V	04222	SR201C102MAAH
A4A9C8	0160-3878	6	1	CAP-FXD 1000pF 100 V	04222	SR201C102MAAH
A4A9C9	0160-3878	6	1	CAP-FXD 1000pF 100 V	04222	SR201C102MAAH
A4A9C10	0160-3878	6	1	CAP-FXD 1000pF 100 V	04222	SR201C102MAAH
A4A9C11	0160-4832	4	1	CAPACITOR-FXD .01UF +-10% 100VDC CER	04222	SA101C103KAAH
A4A9C12	0160-4832	4	1	CAPACITOR-FXD .01UF +-10% 100VDC CER	04222	SA101C103KAAH
A4A9C13	0160-4832	4	1	CAPACITOR-FXD .01UF +-10% 100VDC CER	04222	SA101C103KAAH
A4A9C14	0160-4832	4	1	CAPACITOR-FXD .01UF +-10% 100VDC CER	04222	SA101C103KAAH
A4A9C15	0160-4832	4	1	CAPACITOR-FXD .01UF +-10% 100VDC CER	04222	SA101C103KAAH
A4A9C16	0160-4832	4	1	CAPACITOR-FXD .01UF +-10% 100VDC CER	04222	SA101C103KAAH
A4A9C17	0160-4832	4	1	CAPACITOR-FXD .01UF +-10% 100VDC CER	04222	SA101C103KAAH
A4A9C18	0160-4832	4	1	CAPACITOR-FXD .01UF +-10% 100VDC CER	04222	SA101C103KAAH
A4A9C19	0160-4832	4	1	CAPACITOR-FXD .01UF +-10% 100VDC CER	04222	SA101C103KAAH
A4A9C20	0160-4832	4	1	CAPACITOR-FXD .01UF +-10% 100VDC CER	04222	SA101C103KAAH
A4A9C21	0160-4832	4	1	CAPACITOR-FXD .01UF +-10% 100VDC CER	04222	SA101C103KAAH
A4A9C22	0160-4832	4	1	CAPACITOR-FXD .01UF +-10% 100VDC CER	04222	SA101C103KAAH
A4A9C23	0160-4832	4	1	CAPACITOR-FXD .01UF +-10% 100VDC CER	04222	SA101C103KAAH
A4A9C24	0160-4832	4	1	CAPACITOR-FXD .01UF +-10% 100VDC CER	04222	SA101C103KAAH
A4A9CR1	1901-0040	1	1	DIODE-SWITCHING 30V 50MA 2NS DO-35	9N171	1N4148
A4A9CR2	1901-0040	1	1	DIODE-SWITCHING 30V 50MA 2NS DO-35	9N171	1N4148
A4A9CR4	1901-0050	3	1	DIODE-SWITCHING 80V 200MA 2NS DO-35	9N171	1N4150
A4A9CR5	1901-0050	3	1	DIODE-SWITCHING 80V 200MA 2NS DO-35	9N171	1N4150
A4A9CR6	1901-0040	1	1	DIODE-SWITCHING 30V 50MA 2NS DO-35	9N171	1N4148
A4A9CR7	1901-0040	1	1	DIODE-SWITCHING 30V 50MA 2NS DO-35	9N171	1N4148
A4A9CR8	1901-0050	3	1	DIODE-SWITCHING 80V 20DMA 2NS DO-35	9N171	1N4150
A4A9CR9	1901-0050	3	1	DIODE-SWITCHING 80V 200MA 2NS DO-35	9N171	1N4150
A4A9CR10	1901-0050	3	1	IIODE-SWITCHING 80V 200MA 2NS DO-35	9N171	1N4150
A4A9CR11	1901-0040	1	1	DIODE-SWITCHING 30V 50MA 2NS DO-35	9N171	114148
A4A9CR12	1901-0040	1	1	IIODE-SWITCHING 30V 50MA 2NS DO-35	9N171	1N4148
A4A9CR13	1901-0040	1	1	IIODE-SWITCHING 30V 50MA 2NS DO-35	9N171	1N4148
A4A9CR14	1901-0040	1	1	DIODE-SWITCHING 30V 50MA 2NS DO-35	9N171	1N4148
A4A9CR15	1901-0040	1	1	IIODE-SWITCHING 30V 50MA 2NS DO-35	9N171	1N4148
A4A9CR16	1910-0016	3	1	DIODE-GE 6DV 60MA 1US DO-7		
A4A9CR17	1910-0016	3	1	DIODE-GE 60V 60MA 1US DO-7		
A4A9CR18	1901-0040	1	1	IIODE-SWITCHING 30V 50MA 2NS DO-35	9N171	1N4148
A4A9CR19	1901-0040	1	1	IIODE-SWITCHING 30V 50MA 2NS DO-35	9N171	1N4148
A4A9CR20	1901-0040	1	1	IIODE-SWITCHING 30V 50MA 2NS DO-35	9N171	1N4148
A4A9CR21	1901-0050	3	1	IIODE-SWITCHING 80V 200MA 2NS DO-35	9N171	1N4150
A4A9L1	3100-1618	1	1	INDUCTOR RF-CH-MLD 5.6UH +-10% .166D-INX	24226	15M561K
A4A9Q1	1854-0477	7	1	TRANSISTOR NPN 2N2222A SI TO-18 PD=500MW	04713	2N2222A

**Indicates facto y-selected value*

HP Part Number 85662-60173

A4A9 IF Control

Reference Designatior	HP Part Number	C D	Qt	Description	Mfr Code	Mfr Part Number
A4A9Q2	1853-0281	C	1	TRANSISTOR PNP 2N2907A SI TO-18 PD=400MW	04713	2N2907A
A4A9Q3	1853-0281	C	1	TRANSISTOR PNP 2N2907A SI TO-18 PD=400MW	04713	2N2907A
A4A9Q6	1854-0404	C	1	TRANSISTOR NPN SI TO-18 PD=360MW	04713	
A4A9Q8	1854-0404	C	1	TRANSISTOR NPN SI TO-18 PD=360MW	04713	
A4A9Q9	1854-0404	C	1	TRANSISTOR NPN SI TO-18 PD=360MW	04713	
A4A9Q10	1854-0404	C	1	TRANSISTOR NPN SI TO-18 PD=360MW	04713	
A4A9Q20	1853-0281	9	1	TRANSISTOR PNP 2N2907A SI TO-18 PD=400MW	04713	2N2907A
A4A9Q21	1853-0281	9	1	TRANSISTOR PNP 2N2907A SI TO-18 PD=400MW	04713	2N2907A
A4A9Q25	1853-0281	9	1	TRANSISTOR PNP 2N2907A SI TO-18 PD=400MW	04713	2N2907A
A4A9Q27	1853-0281	9	1	TRANSISTOR PNP 2N2907A SI TO-18 PD=400MW	04713	2N2907A
A4A9Q28	1853-0281	9	1	TRANSISTOR PNP 2N2907A SI TO-18 PD=400MW	04713	2N2907A
A4A9Q29	1853-0281	9	1	TRANSISTOR PNP 2N2907A SI TO-18 PD=400MW	04713	2N2907A
A4A9R1	0757-0442	9	1	RESISTOR 10K +-1% .125W TF TC=0+-100	2M627	CR814 OR CRB25
A4A9R2	0757-0442	9	1	RESISTOR 10K +-1% .125W TF TC=0+-100	2M627	CRB14 OR CR825
A4A9R4	0757-0442	9	1	RESISTOR 10K +-1% .125W TF TC=0+-100	2M627	CRB14 OR CRB25
A4A9R5	0757-0442	9	1	RESISTOR 10K +-1% .125W TF TC=0+-100	2M627	CRB14 OR CR825
A4A9R7	0757-0442	9	1	RESISTOR 10K +-1% .125W TF TC=0+-100	2M627	CRB14 OR CR825
A4A9R10	0698-0085	0	1	RESISTOR 2.61K 1% .125W TF TC=0+-100	2M627	CRB14 OR CR825
A4A9R11	0698-0085	0	1	RESISTOR 2.61K 1% .125W TF TC=0+-100	2M627	CR814 OR CRB25
A4A9R12	0757-0442	9	1	RESISTOR 10K +-1% .125W TF TC=0+-100	2M627	CRB14 OR CR825
A4A9R13	0757-0280	3	1	RESISTOR 1K +-1% .125W TF TC=0+-100	2M627	CRB14 OR CRB25
A4A9R14	0757-0442	9	1	RESISTOR 10K +-1% .125W TF TC=0+-100	2M627	CR814 OR CR825
A4A9R15	0757-0442	9	1	RESISTOR 10K +-1% .125W TF TC=0+-100	2M627	CRB14 OR CRB25
A4A9R16	0757-0317	7	1	RESISTOR 1.33K +-1% .125W TF TC=0+-100	2M627	CRB14 OR CRB25
A4A9R17	0757-0442	9	1	RESISTOR 10K +-1% .125W TF TC=0+-100	2M627	CRB14 OR CRB25
A4A9R18	0757-0442	9	1	RESISTOR 10K +-1% .125W TF TC=0+-100	2M627	CR814 OR CRB25
A4A9R19	0757-0442	9	1	RESISTOR 10K +-1% .125W TF TC=0+-100	2M627	CR814 OR CR825
A4A9R20	0757-0442	9	1	RESISTOR 10K +-1% .125W TF TC=0+-100	2M627	CRB14 OR CRB25
A4A9R21	3757-0442	9	1	RESISTOR 10K +-1% .125W TF TC=0+-100	2M627	CRB14 OR CRB25
A4A9R22	3698-3158	4	1	RESISTOR 23.71: 1% .125W TF TC=0+-100	2M627	CRB14 OR CRB25
A4A9R23	0757-0463	4	1	RESISTOR 82.5K +-1% .125W TF TC=0+-100	2M627	CR814 OR CRB25
A4A9R24	0757-0447	4	1	RESISTOR 16.2K +-1% .125W TF TC=0+-100	2M627	CR814 OR CR825
A4A9R25	3698-3161	3	1	RESISTOR 38.31: 1% .125W TF TC=0+-100	2M627	CRB14 OR CRB25
A4A9R26	0698-3160	8	1	RESISTOR 31.6K 1% .125W TF TC=0+-100	2M627	CRB14 OR CR825
A4A9R27	0757-0442	3	1	RESISTOR 10K +-1% .125W TF TC=0+-100	2M627	CR814 OR CRB25
A4A9R28	0757-0458	7	1	RESISTOR 51.1K +-1% .125W TF TC=0+-100	2M627	CRB14 OR CRB25
A4A9R29	0757-0420	3	1	RESISTOR 750 +-1% .125W TF TC=0+-100	2M627	CRB14 OR CRB25
A4A9R30	1757-0438	3	1	RESISTOR 5.11K +-1% .125W TF TC=0+-100	2M627	CR814 OR CR825
A4A9R33	1757-0438	3	1	RESISTOR 5.11K +-1% .125W TF TC=0+-100	2M627	CR814 OR CRB25
A4A9R34	1757-0438	3	1	RESISTOR 5.11K +-1% .125W TF TC=0+-100	2M627	CRB14 OR CRB25
A4A9R35	1757-0438	3	1	RESISTOR 5.11K +-1% .125W TF TC=0+-100	2M627	CRB14 OR CRB25
A4A9R36	1757-0438	3	1	RESISTOR 5.11K +-1% .125W TF TC=0+-100	2M627	CR814 OR CRB25
A4A9R40	1757-0444	1	1	RESISTOR 12.1K +-1% .125W TF TC=0+-100	2M627	CR814 OR CR825
A4A9R41	1698-3459	3	1	RESISTOR 383K 1% .125W TF TC=D+-100	2M627	CRB14 OR CRB25
A4A9R42	0698-3243	3	1	RESISTOR 178K 1% .125W TF TC=0+-100	2M627	CR814 OR CRB25
A4A9R43	0698-0085	3	1	RESISTOR 2.61K 1% .125W TF TC=0+-100	2M627	CRB14 OR CRB25
A4A9R44	1757-0428	1	1	RESISTOR 1.62K +-1% .125W TF TC=0+-100	2M627	CRB14 OR CR825
A4A9R45	0757-0280	3	1	RESISTOR 1K +-1% .125W TF TC=0+-100	2M627	CRB14 OR CR825

**Indicates factory-selected value*

HP Part Number 85662-60173

A4A9 IF Control

Reference Designation	HP Part Number	CD	Qty	Description	Mfr Code	Mfr Part Number
A4A9R46	0757-0419	C	1	RESISTOR 681 +-1% .125W TF TC=0+-100	2M627	CR814 OR CRB25
A4A9R47	0757-0438	3	1	RESISTOR 5.11K +-1% .125W TF TC=0+-100	2M627	CRB14 OR CR825
A4A9R48	0698-0083	8	1	RESISTOR 1.96K 1% .125W TF TC=0+-100	2M627	CRB14 OR CRB25
A4A9R49	0698-3260	9	1	RESISTOR 464K 1% .125W TF TC=0+-100	2M627	CRB14 OR CRB25
A4A9R50	0698-3260	9	1	RESISTOR 464K 1% .125W TF TC=0+-100	2M627	CRB14 OR CRB25
A4A9R51	0757-1094	9	1	RESISTOR 1.47K +-1% .125W TF TC=D+-100	2M627	CRB14 OR CRB25
A4A9R52	0698-3150	6	1	RESISTOR 2.371: 1% .125W TF TC=0+-100	2M627	CR814 OR CRB25
A4A9R53	0698-3158	4	1	RESISTOR 23.71: 1% .125W TF TC=0+-100	2M627	CR814 OR CRB25
A4A9R54	0698-3260	9	1	RESISTOR 464K 1% .125W TF TC=0+-100	2M627	CRB14 OR CRB25
A4A9R55	0757-0442	9	1	RESISTOR 10K +-1% .125W TF TC=0+-100	2M627	CRB14 OR CRB25
A4A9R56	0757-0279	0	1	RESISTOR 3.16K +-1% .125W TF TC=0+-100	2M627	CRB14 OR CRB25
A4A9R57	0698-3153	9	1	RESISTOR 3.831: 1% .125W TF TC=0+-100	2M627	CR814 OR CRB25
A4A9R59	0698-0085	0	1	RESISTOR 2.61K 1% .125W TF TC=0+-100	2M627	CRB14 OR CRB25
A4A9R60	2100-3109	2	1	RESISTOR-TRMR 2K 10% TKF SIDE-ADJ 17-TRN	32997	3006P-DM3-202
A4A9R61	2100-3103	6	1	RESISTOR-TRMR 10K 10% TKF SIDE-ADJ 17-TR	32997	3006P-DM3-103
A4A9R62	2100-3054	6	1	RESISTOR-TRMR 50K 10% TKF SIDE-ADJ 17-TR	32997	3006P-DM3-503
A4A9R63	0757-0419	0	1	RESISTOR 681 +-1% .125W TF TC=0+-100	2M627	CR814 OR CRB25
A4A9R64	0757-0438	3	1	RESISTOR 5.11K +-1% .125W TF TC=0+-100	2M627	CRB14 OR CRB25
A4A9R65	2100-3094	4	1	RESISTOR-TRMR 100K 10% TKF SIDE-ADJ 17-T	32997	3006P-DM3-104
A4A9R66	2100-3161	6	1	RESISTOR-TRMR 20K 10% TKF SIDE-ADJ 17-TR	32997	3006P-DM3-203
A4A9R67	0757-0465	6	1	RESISTOR 100K +-1% .125W TF TC=0+-100	2M627	CR814 OR CR825
A4A9R68	0757-0279	0	1	RESISTOR 3.16K +-1% .125W TF TC=0+-100	2M627	CR814 OR CRB25
A4A9R69*	0698-3451	0	1	RESISTOR 133K 1% .125W TF TC=0+-100	2M627	CRB14 OR CRB25
A4A9R70*	0698-3260	9	1	RESISTOR 464K 1% .125W TF TC=0+-100	2M627	CRB14 OR CRB25
A4A9R71*	0698-3266	5	1	RESISTOR 237K 1% .125W TF TC=0+-100	2M627	CRB14 OR CRB25
A4A9TP1	1251-0600	0	1	CONNECTOR-SGL CONT PIN 1.14-MM-BSC-SZ SQ	83486	928-196-004140
A4A9TP2	1251-0600	0	1	CONNECTOR-SGL CONT PIN 1.14-MM-BSC-SZ SQ	83486	928-196-004140
A4A9U1	5081-8117	3	1	SCREENED 1826-0092 IC 1458 M2 OPAMP	28480	5081-8117
A4A9U2	1820-1418	7	1	IC DCDR TTL LS BCD-TO-DEC 4-TO-10-LINE 4	01295	SN74LS42N
A4A9U3	1820-1195	7	1	IC FF TTL LS D-TYPE POS-EDGE-TRIG COM CL	01295	SN74LS175N
A4A9U4	1820-1418	7	1	IC DCDR TTL LS BCD-TO-DEC 4-TO-10-LINE 4	01295	SN74LS42N
A4A9U6	1820-1196	B	1	IC FF TTL LS D-TYPE POS-EDGE-TRIG COM CL	01295	SN74LS174N
A4A9U7	1820-1216	3	1	IC DCDR TTL LS 3-TO-8-LINE 3-INP	01295	SN74LS138N
A4A9U8	1820-1196	B	1	IC FF TTL LS O-TYPE POS-EDGE-TRIG COM CL	01295	SN74LS174N
A4A9U9	1820-1196	B	1	IC FF TTL LS D-TYPE POS-EDGE-TRIG COM CL	01295	SN74LS174N
A4A9U10	1820-1196	B	1	IC FF TTL LS D-TYPE POS-EDGE-TRIG COM CL	01295	SN74LS174N
A4A9U11	1820-1196	B	1	IC FF TTL LS D-TYPE POS-EDGE-TRIG COM CL	01295	SN74LS174N
A4A9U12	1820-1418	7	1	IC DCDR TTL LS BCD-TO-DEC 4-TO-10-LINE 4	01295	SN74LS42N
A4A9U13	1820-0668	7	1	IC BFR TTL NON-INV HEX 1-INP	01295	SN7407N
A4A9U14	1820-0471	0	1	IC INV TTL HEX 1-INP	01295	SN7406N
A4A9U15	1820-0471	0	1	IC INV TTL HEX 1-INP	01295	SN7406N
A4A9U16	1820-0471	3	1	IC INV TTL HEX I-INP	01295	SN7406N
A4A9VR1	1902-0041	4	1	DIODE-ZNR 5.11V 5% DO-35 PD=.4W	04713	
A4A9VR2	1902-3203	5	1	DIODE-ZNR 14.7V 5% DO-35 PD=.4W	04713	

**Indicates factoy-selected value*

HP Part Number 85662-60201

A4A9 IF Control

Reference Designation	HP Part Number	C. D	Qty	Description	Mfr Code	Mfr Part Number
A4A9	85662-60201	3	1	BOARD ASSEMBLY. IF CONTROL (OPTION H96) (SERIAL PREFIXES: 2813A-2816A)	28480	85662-60201
A4A9C1	0160-4832	4	1	CAPACITOR-FXD .01UF +-10% 100VDC CER	04222	SA101C103KAAH
A4A9C3	0160-4832	4	1	CAPACITOR-FXO .01UF +-10% 100VDC CER	04222	SA101C103KAAH
A4A9C4	0160-4832	4	1	CAPACITOR-FXD .01UF +-10% 100VDC CER	04222	SA101C103KAAH
A4A9C5	0160-4832	4	1	CAPACITOR-FXD .01UF +-10% 100VDC CER	04222	SA101C103KAAH
A4A9C6	0160-4832	4	1	CAPACITOR-FXD .01UF +-10% 100VDC CER	04222	SA101C103KAAH
A4A9C7	0160-4832	4	1	CAPACITOR-FXD .01UF +-10% 100VDC CER	04222	SA101C103KAAH
A4A9C8	0160-4832	4	1	CAPACITOR-FXD .01UF +-10% IOOVDC CER	04222	SA101C103KAAH
A4A9C9	0160-4832	4	1	CAPACITOR-FXD .01UF +-10% IOOVDC CER	04222	SA101C103KAAH
A4A9C10	0160-4832	4	1	CAPACITOR-FXD .01UF +-10% IOOVDC CER	04222	SA101C103KAAH
A4A9C11	0160-4832	4	1	CAPACITOR-FXD .01UF +-10% 100VDC CER	04222	SA101C103KAAH
A4A9C12	0160-4832	4	1	CAPACITOR-FXD .01UF +-10% 100VDC CER	04222	SA101C103KAAH
A4A9C13	0160-4832	4	1	CAPACITOR-FXD .01UF +-10% 100VDC CER	04222	SA101C103KAAH
A4A9C14	0160-4832	4	1	CAPACITOR-FXD .01UF +-10% 100VDC CER	04222	SA101C103KAAH
A4A9C15	0160-4822	2	1	CAPACITOR-FXD 1000PF +-5% IOOVDC CER 0+-	04222	SA201A102JAAH
A4A9C16	0160-4822	2	1	CAPACITOR-FXO 1000PF +-5% 100VDC CER 0+-	04222	SA201A102JAAH
A4A9C17	0160-4822	2	1	CAPACITOR-FXD 1000PF +-5% 100VDC CER 0+-	04222	SA201A102JAAH
A4A9C18	0160-4822	2	1	CAPACITOR-FXD 1000PF +-5% 100VDC CER 0+-	04222	SA201A102JAAH
A4A9C19	0160-4832	4	1	CAPACITOR-FXD .01UF +-10% 100VDC CER	04222	SA101C103KAAH
A4A9C20	0180-0197	8	1	CAP-FXD 2.2uF 20 V TA	56289	150D225X9020A2-DYS
A4A9C21	0180-0197	a	1	CAP-FXD 2.2uF 20 V TA	56289	150D225X9020A2-DYS
A4A9C22	0180-0197	8	1	CAP-FXD 2.2uF 20 V TA	56289	150D225X9020A2-DYS
A4A9CR1	1901-0050	3	1	DIODE-SWITCHING 80V 200MA 2NS DO-35	9N171	1N4150
A4A9CR2	1901-0050	3	1	DIODE-SWITCHING 80V 200MA 2NS DO-35	9N171	1N4150
A4A9CR3	1901-0050	3	1	DIODE-SWITCHING 80V 200MA 2NS DO-35	9N171	1N4150
A4A9CR4	1901-0050	3	1	DIODE-SWITCHING 80V 200MA 2NS DO-35	9N171	1N4150
A4A9CR5	1901-0050	3	1	DIODE-SWITCHING 80V 200MA 2NS DO-35	9N171	1N4150
A4A9CR6	1901-0050	3	1	DIODE-SWITCHING 80V 200MA 2NS DO-35	9N171	1N4150
A4A9CR7	1901-0050	3	1	DIODE-SWITCHING 8DV 200MA 2NS DO-35	9N171	1N4150
A4A9CR8	1901-0050	3	1	DIODE-SWITCHING 8DV 200MA 2NS DO-35	9N171	1N4150
A4A9CR9	1901-0050	3	1	DIODE-SWITCHING 80V 200MA 2NS DO-35	9N171	1N4150
A4A9CR10	1901-0050	3	1	DIODE-SWITCHING 80V 200HA 2NS DO-35	9N171	1N4150
A4A9CR11	1901-0050	3	1	DIODE-SWITCHING 80V 200MA 2NS DO-35	9N171	1N4150
A4A9CR12	1901-0050	3	1	DIODE-SWITCHING BOV 200MA 2NS DO-35	9N171	1N4150
A4A9CR13	1901-0050	3	1	DIODE-SWITCHING 80V 200MA 2NS DO-35	9N171	1N4150
A4A9CR14	1901-0050	3	1	DIODE-SWITCHING 80V 200MA 2NS DO-35	9N171	1N4150
A4A9CR15	1901-0050	3	1	DIODE-SWITCHING 80V 200MA 2NS DO-35	9N171	1N4150
A4A9CR16	1901-0050	3	1	DIODE-SWITCHING 80V 200MA 2NS DO-35	9N171	1N4150
A4A9CR17	1901-0050	3	1	DIODE-SWITCHING 8DV 200MA 2NS DO-35	9N171	1N4150
A4A9CR18	1901-0050	3	1	DIODE-SWITCHING 80V 200MA 2NS DO-35	9N171	1N4150
A4A9CR19	1901-0050	3	1	DIODE-SWITCHING 80V 200MA 2NS DO-35	9N171	1N4150
A4A9CR20	1901-0050	3	1	DIODE-SWITCHING 80V 200MA 2NS DO-35	9N171	1N4150
A4A9CR21	1901-0050	3	1	DIODE-SWITCHING 80V 200MA 2NS DO-35	9N171	1N4150
A4A9CR22	1901-0050	3	1	DIODE-SWITCHING 80V 200MA 2NS DO-35	9N171	1N4150
A4A9CR23	1901-0050	3	1	DIODE-SWITCHING 80V 200MA 2NS DO-35	9N171	1N4150
A4A9CR24	1901-0050	3	1	DIODE-SWITCHING 80V 200MA 2NS DO-35	9N171	1N4150

**Indicates factory-selected value*

HP Part Number 85662-60201

A4A9 IF Control

Reference Designation	HP Part Number	C. D	Qty	Description	Mfr Code	Mfr Part Number
A4A9CR25	1901-0050	3	1	DIODE-SWITCHING 80V 200MA 2NS DO-35	9N171	1N4150
A4A9CR26	1901-0050	3	1	DIODE-SWITCHING 80V 200MA 2NS DO-35	9N171	1N4150
A4A9CR27	1901-0050	3	1	DIODE-SWITCHING 80V 200MA 2NS DO-35	9N171	1N4150
A4A9CR28	1901-0050	3	1	DIODE-SWITCHING 80V 200MA 2NS DO-35	9N171	1N4150
A4A9CR29	1901-0050	3	1	DIODE-SWITCHING 80V 200MA 2NS DO-35	9N171	IN4150
A4A9CR30	1901-0050	3	1	DIODE-SWITCHING 80V 200MA 2NS DO-35	9N171	1N4150
A4A9R2*	0698-3155	1	1	RESISTOR 4.64): 1% .125W TF TC=0+-100	2M627	CR814 OR CR825
A4A9R3*	0757-0442	9	1	RESISTOR 10K +-1% .125W TF TC=0+-100	2M627	CR814 OR CR825
A4A9R6*	0757-0465	6	1	RESISTOR 100K +-1% .125W TF TC=0+-100	2M627	CRB14 OR CRB25
A4A9R7*	0698-3451	0	1	RESISTOR 133K 1% .125W TF TC=0+-100	2M627	CR814 OR CR825
A4A9R10*	0698-3136	8	1	RESISTOR 17.8K 1% .125W TF TC=0+-100	2M627	CR814 OR CR825
A4A9R11*	0698-0083	8	1	RESISTOR 1.96K 1% .125W TF TC=0+-100	2M627	CRB14 OR CRB25
A4A9R14	0757-0442	9	1	RESISTOR 10K +-1% .125W TF TC=0+-100	2M627	CRB14 OR CRB25
A4A9R15	0698-0082	7	1	RESISTOR 464 1% .125W TF TC=0+-100	2M627	CR814 OR CRB25
A4A9R16	0757-0424	7	1	RESISTOR 1.1K +-1% .125W TF TC=0+-100	2M627	CRB14 OR CR825
A4A9R17	0757-0442	9	1	RESISTOR 10K +-1% .125W TF TC=0+-100	2M627	CRB14 OR CRB25
A4A9R18	0757-0317	7	1	RESISTOR 1.33K +-1% .125W TF TC=0+-100	2M627	CRB14 OR CR825
A4A9R19	0757-0442	9	1	RESISTOR 10K +-1% .125W TF TC=0+-100	2M627	CR814 OR CRB25
A4A9R23	0757-0419	0	1	RESISTOR 681 +-1% .125W TF TC=0+-100	2M627	CRB14 OR CRB25
A4A9R24	0757-0280	3	1	RESISTOR 1K +-1% .125W TF TC=0+-100	2M627	CRB14 OR CRB25
A4A9R25	0757-0438	3	1	RESISTOR 5.11K +-1% .125W TF TC=0+-100	2M627	CR814 OR CRB25
A4A9R26	0757-0428	1	1	RESISTOR 1.62K +-1% .125W TF TC=0+-100	2M627	CRB14 OR CRB25
A4A9R29	0698-0085	0	1	RESISTOR 2.61K 1% .125W TF TC=0+-100	2M627	CRB14 OR CRB25
A4A9R30	0757-0458	7	1	RESISTOR 51.1K +-1% .125W TF TC=0+-100	2M627	CRB14 OR CRB25
A4A9R32	0757-0289	2	1	RESISTOR 13.3K +-1% .125W TF TC=0+-100	2M627	CR814 OR CR825
A4A9R33	0698-3156	2	1	RESISTOR 14.7K 1% .125W TF TC=0+-100	2M627	CRB14 OR CRB25
A4A9R34	0698-3437	2	1	RESISTOR 133 1% .125W TF TC=0+-100	2M627	CRB14 OR CRB25
A4A9R35	0757-0289	2	1	RESISTOR 13.3K +-1% .125W TF TC=0+-100	2M627	CRB14 OR CRB25
A4A9R36	0698-3156	2	1	RESISTOR 14.7K 1% .125W TF TC=0+-100	2M627	CRB14 OR CRB25
A4A9R37	0698-3437	2	1	RESISTOR 133 1% .125W TF TC=0+-100	2M627	CRB14 OR CRB25
A4A9R38	0757-0442	3	1	RESISTOR 10K +-1% .125W TF TC=0+-100	2M627	CRB14 OR CRB25
A4A9R39	0757-0442	3	1	RESISTOR 10K +-1% .125W TF TC=0+-100	2M627	CRB14 OR CRB25
A4A9R40	0698-0085	3	1	RESISTOR 2.61K 1% .125W TF TC=0+-100	2M627	CR814 OR CRB25
A4A9R41	0757-0438	3	1	RESISTOR 5.11K +-1% .125W TF TC=0+-100	2M627	CR814 OR CRB25
A4A9R42	0757-0444	1	1	RESISTOR 12.1K +-1% .125W TF TC=0+-100	2M627	CRB14 OR CR825
A4A9R43	0698-0084	3	1	RESISTOR 2.15K 1% .125W TF TC=0+-100	2M627	CRB14 OR CRB25
A4A9R44	0698-0084	3	1	RESISTOR 2.15K 1% .125W TF TC=0+-100	2M627	CRB14 OR CRB25
A4A9R45	0698-3450	3	1	RESISTOR 42.21: 1% .125W TF TC=0+-100	2M627	CRB14 OR CRB25
A4A9R46*	0757-0466	7	1	RESISTOR 110K +-1% .125W TF TC=0+-100	2M627	CR814 OR CRB25
A4A9R47	3698-3457	5	1	RESISTOR 316K 1% .125W TF TC=0+-100	2M627	CR814 OR CR825
A4A9R48*	3698-3458	7	1	RESISTOR 348K 1% .125W TF TC=0+-100	2M627	CRB14 OR CR825
A4A9R49	0698-3161	3	1	RESISTOR 38.31: 1% .125W TF TC=0+-100	2M627	CRB14 OR CRB25
A4A9R50*	3757-0462	3	1	7ESISTOR 75K +-1% .125W TF TC=0+-100	2M627	CRB14 OR CRB25
A4A9R51	1757-0464	5	1	RESISTOR 90.9K +-1% .125W TF TC=0+-100	2M627	CRB14 OR CRB25
A4A9R52*	1698-8960	5	1	RESISTOR 750K +-1% .125W TF TC=0+-100	2M627	CR814 OR CRB25
A4A9R53	3698-3449	5	1	RESISTOR 28.7K 1% .125W TF TC=0+-100	2M627	CR814 OR CRB25
A4A9R54	1757-0199	3	1	RESISTOR 21.5K +-1% .125W TF TC=0+-100	2M627	CR814 OR CRB25
A4A9R55*	1757-0460	1	1	RESISTOR 61.9K +-1% .125W TF TC=0+-100	2M627	CR814 OR CR825

**Indicates factoy-selected value*

HP Part Number 85662-60201
A4A9 IF Control

Reference Designatior	HP Part Number	C D	Qty	Description	Mfr Code	Mfr Part Number
A4A9R56	0757-0460		1	RESISTOR 61.9K +-1% .125W TF TC=0+-100	2M627	CRB14 OR CRB25
A4A9R57*	0698-3460		1	RESISTOR 422K 1% .125W TF TC=0+-100	2M627	CRB14 OR CRB25
A4A9R58	0698-3450	9	1	RESISTOR 42.2K 1% .125W TF TC=0+-100	2M627	CR814 OR CRB25
A4A9R59*	0698-8824	1	1	RESISTOR 562K +-1% .125W TF TC=0+-100	2M627	CRB14 OR CR825
A4A9R60	2100-3103	6	1	RESISTOR-TRMR 10K 10% TKF SIDE-ADJ 17-TR	32997	3006P-DM3-103
A4A9R61	2100-3054	6	1	RESISTOR-TRMR 50K 10% TKF SIDE-ADJ 17-TR	32997	3006P-DM3-503
A4A9R62	2100-3162	7	1	RESISTOR-TRMR 200K 10% TKF SIDE-ADJ 17-T	32997	3006P-DM3-204
A4A9R63	0698-3437	2	1	RESISTOR 133 1% .125W TF TC=0+-100	2M627	CRB14 OR CR825
A4A9R64	0757-0289	2	1	RESISTOR 13.3K +-1% .125W TF TC=0+-100	2M627	CR814 OR CRB25
A4A9R65	2100-3162	7	1	RESISTOR-TRMR 200K 10% TKF SIDE-ADJ 17-1	32997	3006P-DM3-204
A4A9R66	2100-3054	6	1	RESISTOR-TRHR 50K 10% TKF SIDE-ADJ 17-TR	32997	3006P-DM3-503
A4A9R67	0698-0085	0	1	RESISTOR 2.61K 1% .125W TF TC=0+-100	2M627	CRB14 OR CRB25
A4A9R68	0698-0085	0	1	RESISTOR 2.61K 1% .125W TF TC=0+-100	2M627	CRB14 OR CRB25
A4A9R69	0698-3260	0	1	RESISTOR 464K 1% .125W TF TC=0+-100	2M627	CRB14 OR CRB25
A4A9R70*	0698-8826	3	1	RESISTOR 825K +-1% .125W TF TC=0+-100	2M627	CRB14 OR CRB25
A4A9R71	0757-0199	3	1	RESISTOR 21.5K +-1% .125W TF TC=D+-100	2M627	CR814 OR CRB25
A4A9R72*	0757-0467	3	1	RESISTOR 121K +-1% .125W TF TC=0+-100	2M627	CRB14 OR CR825
A4A9R74*	0757-0463	4	1	RESISTOR 82.51: +-1% .125W TF TC=0+-100	2M627	CR814 OR CR825
A4A9R75	3698-3156	2	1	RESISTOR 14.7K 1% .125W TF TC=0+-100	2M627	CRB14 OR CRB25
A4A9R76	3757-0465	5	1	RESISTOR 100K +-1% .125W TF TC=0+-100	2M627	CR814 OR CRB25
A4A9R77	3757-0442	3	1	RESISTOR 10K +-1% .125W TF TC=0+-100	2M627	CRB14 OR CRB25
A4A9R78	0757-0280	3	1	RESISTOR 1K +-1% .125W TF TC=D+-100	2M627	CR814 OR CRB25
A4A9R79	0757-0280	3	1	RESISTOR 1K +-1% .125W TF TC=0+-100	2M627	CRB14 OR CRB25
A4A9R80	1757-0280	3	1	RESISTOR 1K +-1% .125W TF TC=0+-100	2M627	CRB14 OR CR825
A4A9R81	1757-0280	3	1	RESISTOR 1K +-1% .125W TF TC=0+-100	2M627	CRB14 OR CR825
A4A9R82	0698-0084	9	1	RESISTOR 2.15K 1% .125W TF TC=0+-100	2M627	CRB14 OR CRB25
A4A9TP1	1251-0600	0	1	:DNNECTOR-SGL CONT PIN 1.14-MM-BSC-SZ SQ	83486	928-196-004140
A4A9TP2	1251-0600	0	1	:DNNECTOR-SGL CONT PIN 1.14-MM-BSC-SZ SQ	83486	928-196-004140
A4A9U1	1826-0990	0	1	IC OP AMP GP DUAL 8-DIP-C PKG	01295	MC1458JG
A4A9U2	1820-0468	5	1	IC DCDR TTL BCD-TO-DEC 4-TO-10-LINE 4-IN	01295	SN7445N
A4A9U3	1858-0076	0	1	TRANSISTOR ARRAY 14-PIN PLSTC TO-116	04713	MPQ2907P
A4A9U4	1858-0076	0	1	TRANSISTOR ARRAY 14-PIN PLSTC TO-116	04713	MPQ2907P
A4A9U5	1810-0277	1	1	IETWORK-RES IO-SIP 2.2K OHM X 9	11236	750-101
A4A9U6	.820-0468	5	1	:C DCDR TTL BCD-TO-DEC 4-TO-IO-LINE 4-IN	01295	SN7445N
A4A9U7	.820-1195		1	:C FF TTL LS D-TYPE POS-EDGE-TRIG COM CL	01295	SN74LS175N
A4A9U8	.858-0077		1	'RANSISTOR ARRAY 14-PIN PLSTC TO-116	04713	MPQ2222P
A4A9U9	.820-0471	0	1	IC INV TTL HEX I-INP	01295	SN7406N
A4A9U10	.820-1196	1	1	:C FF TTL LS D-TYPE POS-EDGE-TRIG COM CL	01295	SN74LS174N
A4A9U11	.820-0468	.	1	:C DCDR TTL BCD-TO-DEC 4-TO-10-LINE 4-IN	01295	SN7445N
A4A9U12	.810-0280	1	1	IETWORK-RES 10-SIP 10.0K OHM X 9	11236	750-101
A4A9U13	.820-1216	.	1	'C DCDR TTL LS 3-TO-8-LINE 3-INP	01295	SN74LS138N
A4A9U14	820-1196	0	1	C FF TTL LS D-TYPE POS-EDGE-TRIG COM CL	01295	SN74LS174N
A4A9U15	820-0471	0	1	C INV TTL HEX l-INP	01295	SN7406N
A4A9U16	858-0076	0	1	'RANSISTOR ARRAY 14-PIN PLSTC TO-116	04713	MPQ2907P
A4A9U17	820-1196		1	C FF TTL LS D-TYPE PDS-EDGE-TRIG COM CL	01295	SN74LS174N
A4A9U18	820-1196		1	C FF TTL LS D-TYPE POS-EDGE-TRIG COM CL	01295	SN74LS174N
A4A9U19	820-0471	0	1	C INV TTL HEX l-INP	01295	SN7406N

**Indicates factory-selected value*

HP Part Number 85662-60201

A4A9 IF Control

Reference Designatior	HP Part Number	CD	Qty	Description	Mfr Code	Mfr Part Number
A4A9U20	1820-1196	8	1	IC FF TTL LS D-TYPE POS-EDGE-TRIG COM CI	01295	SN74LS174N
A4A9U21	1820-2024	3	1	IC DRVR TTL LS LINE DRVR OCTL	01295	SN74LS244N
A4A9U22	1810-0280	8	1	NETWORK-RES 10-SIP 10.0K OHM X 9	1123E	750-101
A4A9VR1	1902-3203	6	1	DIODE-ZNR 14.7V 5% DO-35 PD=.4W	04713	
A4A9VR2	1902-0041	4	1	DIODE-ZNR 5.11V 5% DO-35 PD=.4W	04713	
A4A9W1	8159-0005	0	1	RESISTOR-ZERO OHMS 22 AWG LEAD DIA	5521C	L-2007-1

Analyzer Repair Inc.

**Indicates factory-selected value*

HP Part Number 85662-60225

A4A9 IF Control Assembly

Reference Designatior	HP Part Number	C D	Qty	Description	Mfr Code	Mfr Part Number
A4A9	85662-60225		1	BOARD ASSEMBLY, IF CONTROL (OPTION H96) (SERIAL PREFIX: 2848A)	2848(	85662-60225
A4A9C1	0160-4832		1	CAPACITOR-FXD .01UF +-10% 100VDC CER	0422?	SA101C103KAAH
A4A9C3	0160-4832		1	CAPACITOR-FXD .01UF +-10% 100VDC CER	0422?	SA101C103KAAH
A4A9C4	0160-4832		1	CAPACITOR-FXD .01UF +-10% 100VDC CER	04222	SA101C103KAAH
A4A9C5	0160-4832		1	CAPACITOR-FXD .01UF +-10% 100VDC CER	0422?	SA101C103KAAH
A4A9C6	0160-4832		1	CAPACITOR-FXD .01UF +-10% 100VDC CER	0422?	SA101C103KAAH
A4A9C7	0160-4832	4	1	CAPACITOR-FXD .01UF +-10% 100VDC CER	04224	SA101C103KAAH
A4A9C8	0160-4832	4	1	CAPACITOR-FXD .01UF +-10% 100VDC CER	04222	SA101C103KAAH
A4A9C9	0160-4832	4	1	CAPACITOR-FXD .01UF +-10% 100VDC CER	04222	SA101C103KAAH
A4A9C10	0160-4832	4	1	CAPACITOR-FXD .01UF +-10% IOOVDC CER	04222	SA101C103KAAH
A4A9C11	0160-4832	4	1	CAPACITOR-FXD .01UF +-10% 100VDC CER	04222	SA101C103KAAH
A4A9C12	0160-4832	4	1	CAPACITOR-FXD .01UF +-10% 100VDC CER	04222	SA101C103KAAH
A4A9C13	0160-4832	4	1	CAPACITOR-FXD .01UF +-10% 100VDC CER	04222	SA101C103KAAH
A4A9C14	0160-4832	4	1	CAPACITOR-FXD .01UF +-10% 100VDC CER	04222	SA101C103KAAH
A4A9C15	0160-4822	2	1	CAPACITOR-FXD 1000PF +-5% 100VDC CER 0+-	04222	SA201A102JAAH
A4A9C16	0160-4822	2	1	CAPACITOR-FXD 1000PF +-5% 100VDC CER 0+-	04222	SA201A102JAAH
A4A9C17	0160-4822	2	1	CAPACITOR-FXD 1000PF +-5% 100VDC CER 0+-	04222	SA201A102JAAH
A4A9C18	0160-4822	2	1	CAPACITOR-FXD 1000PF +-5% 100VDC CER 0+-	04222	SA201A102JAAH
A4A9C19	0160-4832	4	1	CAPACITOR-FXD .01UF +-10% IOOVDC CER	04222	SA101C103KAAH
A4A9C20	0180-0197	8	1	CAPACITOR-FXD 2.2UF+-10% 20VDC TA	56289	150D225X9020A2-DYS
A4A9C21	0180-0197	8	1	CAPACITOR-FXD 2.2UF+-10% 20VDC TA	56289	150D225X9020A2-DYS
A4A9C22	0180-0197	8	1	CAPACITOR-FXD 2.2UF+-10% 20VDC TA	56289	150D225X9020A2-DYS
A4A9CR2	1901-0050	3	1	DIODE-SWITCHING 8DV 200MA 2NS DO-35	9N171	1N4150
A4A9CR3	1901-0050	3	1	DIODE-SWITCHING 80V 200MA 2NS DO-35	9N171	IN4150
A4A9CR4	1901-0050	3	1	DIODE-SWITCHING 80V 200MA 2NS DO-35	9N171	1N4150
A4A9CR5	1901-0050	3	1	DIODE-SWITCHING 80V 200MA 2NS DO-35	9N171	1N4150
A4A9CR6	1901-0050	3	1	DIODE-SWITCHING 80V 200MA 2NS DO-35	9N171	1N4150
A4A9CR7	1901-0050	3	1	DIODE-SWITCHING 80V 200MA 2NS DO-35	9N171	1N4150
A4A9CR8	1901-0050	3	1	DIODE-SWITCHING 80V 200MA 2NS DO-35	9N171	1N4150
A4A9CR9	1901-0050	3	1	DIODE-SWITCHING 80V 200MA 2NS DO-35	9N171	1N4150
A4A9CR10	1901-0050	3	1	DIODE-SWITCHING 80V 200MA 2NS DO-35	9N171	1N4150
A4A9CR11	1901-0050	3	1	DIODE-SWITCHING 80V 200MA 2NS DO-35	9N171	1N4150
A4A9CR12	1901-0050	3	1	DIODE-SWITCHING 80V 200MA 2NS DO-35	9N171	IN4150
A4A9CR13	1901-0050	3	1	DIODE-SWITCHING BOV 200MA 2NS DO-35	9N171	1N4150
A4A9CR14	1901-0050	3	1	DIODE-SWITCHING 80V 200MA 2NS DO-35	9N171	1N4150
A4A9CR15	1901-0050	3	1	DIODE-SWITCHING 80V 200MA 2NS DO-35	9N171	1N4150
A4A9CR16	1901-0050	3	1	DIODE-SWITCHING 80V 200MA 2NS DO-35	9N171	1N4150
A4A9CR17	1901-0050	3	1	DIODE-SWITCHING 80V 200MA 2NS DO-35	9N171	1N4150
A4A9CR18	1901-0050	3	1	DIODE-SWITCHING 80V 200MA 2NS DO-35	9N171	1N4150
A4A9CR19	1901-0050	3	1	DIODE-SWITCHING 80V 200MA 2NS DO-35	9N171	1N4150
A4A9CR20	1901-0050	3	1	DIODE-SWITCHING 80V 200MA 2NS DO-35	9N171	1N4150
A4A9CR21	1901-0050	3	1	DIODE-SWITCHING 80V 200MA 2NS DO-35	9N171	1N4150
A4A9CR22	1901-0050	3	1	DIODE-SWITCHING 80V 200MA 2NS DO-35	9N171	1N4150
A4A9CR23	1901-0050	3	1	DIODE-SWITCHING 80V 200MA 2NS DO-35	9N171	1N4150
A4A9CR24	1901-0050	3	1	DIODE-SWITCHING 80V 200MA 2NS DO-35	9N171	1N4150
A4A9CR25	1901-0050	3	1	DIODE-SWITCHING 80V 200MA 2NS DO-35	9N171	1N4150
A4A9CR26	1901-0050	3	1	DIODE-SWITCHING 80V 200MA 2NS DO-35	9N171	1N4150

**Indicates factory-selected value*

HP Part Number 85662-60225

A4A9 IF Control Assembly

Reference Designatior	HP Part Number	D	Qty	Description	Mfr Cod	Mfr Part Number
A4A9CR27	1901-0050		1	DIODE-SWITCHING 80V 200MA 2NS DO-35	9N17	1N4150
A4A9CR28	1901-0050		1	DIODE-SWITCHING BOV 200MA 2NS DO-35	9N17	1N4150
A4A9CR29	1901-0050		1	DIODE-SWITCHING 80V 200MA 2NS DO-35	9N17	1N4150
A4A9CR30	1901-0050		1	DIODE-SWITCHING 80V 200MA 2NS DO-35	9N17	1N4150
A4A9MP1	0360-0124		1	CONNECTOR-SGL CONT PIN .04-IN-BSC-SZ RNI	9730	
A4A9MP2	0360-0124		1	CONNECTOR-SGL CONT PIN .04-IN-BSC-SZ RNI	9730'	
A4A9MP3	0360-0124		1	CONNECTOR-SGL CDNT PIN .04-IN-BSC-SZ RNI	9730	
A4A9MP4	0360-0124		1	CONNECTOR-SGL CONT PIN .04-IN-BSC-SZ RNI	97301	
A4A9MP5	0360-0124		1	CDNNECTOR-SGL CONT PIN .04-IN-BSC-SZ RNI	97301	
A4A9MP6	0360-0124		1	CONNECTOR-SGL CONT PIN .04-IN-BSC-SZ RNC	9730	
A4A9MP7	0360-0124		1	CONNECTOR-SGL CDNT PIN .04-IN-BSC-SZ RNC	97301	
A4A9MP8	0360-0124		1	CONNECTOR-SGL CONT PIN .04-IN-BSC-SZ RNC	97301	
A4A9MP9	0360-0124		1	CONNECTOR-SGL CONT PIN .04-IN-BSC-SZ RNC	9730	
A4A9MP10	0360-0124		1	CONNECTOR-SGL CDNT PIN .04-IN-BSC-SZ RNC	9730	
A4A9R3*	0757-0441	8	1	RESISTOR 8.25K +-1% .125W TF TC=0+-100	19701	SFR25H
A4A9R6*	3698-3162	6	1	RESISTOR 46.4K 1% .125W TF TC=0+-100	19701	SFR25H
A4A9R7*	1757-0123		1	RESISTOR 34.81: +-1% .125W TF TC=0+-100	19701	SFR25H
A4A9R10*	1757-0440	4	1	RESISTOR 7.5K +-1% .125W TF TC=0+-100	19701	SFR25H
A4A9R11*	0698-3150	6	1	RESISTOR 2.37K 1% .125W TF TC=0+-100	19701	SFR25H
A4A9R14	0757-0442	0	1	RESISTOR 10K +-1% .125W TF TC=0+-100	19701	SFR25H
A4A9R15	0698-0082	7	1	RESISTOR 464 1% .125W TF TC=0+-100	19701	SFR25H
A4A9R16	0757-0424	7	1	RESISTOR 1.1K +-1% .125W TF TC=0+-100	19701	SFR25H
A4A9R17	0757-0442	0	1	RESISTOR 10K +-1% .125W TF TC=0+-100	19701	SFR25H
A4A9R18	1757-0317	7	1	RESISTOR 1.33K +-1% .125W TF TC=0+-100	19701	SFR25H
A4A9R19	1757-0442		1	RESISTOR 10K +-1% .125W TF TC=0+-100	19701	SFR25H
A4A9R23	0757-0419	0	1	RESISTOR 681 +-1% .125W TF TC=0+-100	19701	SFR25H
A4A9R24	0757-0280	3	1	RESISTOR 1K +-1% .125W TF TC=0+-100	19701	SFR25H
A4A9R25	0757-0438	3	1	RESISTOR 5.11K +-1% .125W TF TC=0+-100	19701	SFR25H
A4A9R26	1757-0428	1	1	RESISTOR 1.62K +-1% .125W TF TC=0+-100	19701	SFR25H
A4A9R29	0698-0085	0	1	RESISTOR 2.61K 1% .125W TF TC=0+-100	19701	SFR25H
A4A9R30	0757-0458	7	1	RESISTOR 51.1K +-1% .125W TF TC=0+-100	19701	SFR25H
A4A9R32	757-0289	2	1	RESISTOR 13.3K +-1% .125W TF TC=0+-100	19701	SFR25H
A4A9R33	698-3156	2	1	RESISTOR 14.7K 1% .125W TF TC=D+-100	19701	SFR25H
A4A9R34	698-3437	2	1	RESISTOR 133 1% .125W TF TC=0+-100	19701	SFR25H
A4A9R35	757-0289	2	1	RESISTOR 13.3K +-1% .125W TF TC=0+-100	19701	SFR25H
A4A9R36	698-3156	2	1	RESISTOR 14.7K 1% .125W TF TC=0+-100	19701	SFR25H
A4A9R37	698-3437	2	1	RESISTOR 133 1% .125W TF TC=0+-100	19701	SFR25H
A4A9R38	757-0442	9	1	RESISTOR 10K +-1% .125W TF TC=0+-100	19701	SFR25H
A4A9R39	757-0442	9	1	RESISTOR 10K +-1% .125W TF TC=0+-100	19701	SFR25H
A4A9R40	0698-0085	0	1	RESISTOR 2.61K 1% .125W TF TC=0+-100	19701	SFR25H
A4A9R41	0757-0438	3	1	RESISTOR 5.11K +-1% .125W TF TC=0+-100	19701	SFR25H
A4A9R42	1757-0444	1	1	RESISTOR 12.1K +-1% .125W TF TC=0+-100	19701	SFR25H
A4A9R43	1698-0084	9	1	RESISTOR 2.15K 1% .125W TF TC=0+-100	19701	SFR25H
A4A9R44	0698-0084	9	1	RESISTOR 2.15K 1% .125W TF TC=0+-100	19701	SFR25H
A4A9R45	0698-3450	9	1	RESISTOR 42.21: 1% .125W TF TC=0+-100	19701	SFR25H
A4A9R46*	0757-0466	7	1	RESISTOR 110K +-1% .125W TF TC=0+-100	19701	SFR25H
A4A9R47	698-3457	5	1	RESISTOR 316K 1% .125W TF TC=0+-100	19701	SFR25H
A4A9R48*	698-3458		1	RESISTDR 348K 1% .125W TF TC=0+-100	19701	SFR25H

**Indicates factory-selected value*

HP Part Number 85662-60225

A4A9 IF Control Assembly

Reference Designation	HP Part Number	CD	Qty	Description	Mfr Code	Mfr Part Number
A4A9R49	0698-3161	9	1	RESISTOR 38.31: 1% .125W TF TC=0+-100	19701	SFR25H
A4A9R50*	0757-0462	3	1	RESISTOR 75K +-1% .125W TF TC=0+-100	19701	SFR25H
A4A9R51	0757-0464	5	1	RESISTOR 90.9K +-1% .125W TF TC=0+-100	19701	SFR25H
A4A9R52*	0698-8960	6	1	RESISTOR 750K +-1% .125W TF TC=0+-100	19701	SFR25H
A4A9R53	0698-3449	6	1	RESISTOR 28.71: 1% .125W TF TC=0+-100	19701	SFR25H
A4A9R54	0757-0199	3	1	RESISTOR 21.5K +-1% .125W TF TC=0+-100	19701	SFR25H
A4A9R55*	0757-0460	1	1	RESISTOR 61.9K +-1% .125W TF TC=0+-100	19701	SFR25H
A4A9R56	0757-0460	1	1	RESISTOR 61.9K +-1% .125W TF TC=0+-100	19701	SFR25H
A4A9R57*	0698-3460	1	1	RESISTOR 422K 1% .125W TF TC=0+-100	19701	SFR25H
A4A9R58	0698-3450	9	1	RESISTOR 42.21: 1% .125W TF TC=0+-100	19701	SFR25H
A4A9R59*	0698-8824	1	1	RESISTOR 562K +-1% .125W TF TC=0+-100	19701	SFR25H
A4A9R60	2100-3103	6	1	RESISTOR-TRMR 10K 10% TKF SIDE-ADJ 17-TR	73138	89PR10K
A4A9R61	2100-3054	6	1	RESISTOR-TRMR 50K 10% TKF SIDE-ADJ 17-TR	73138	89PR50K
A4A9R62	2100-3162	7	1	RESISTOR-TRMR 200K 10% TKF SIDE-ADJ 17-T	73138	89PR200K
A4A9R63	0698-3437	2	1	RESISTOR 133 1% .125W TF TC=D+-100	19701	SFR25H
A4A9R64	0757-0289	2	1	RESISTOR 13.3K +-1% .125W TF TC=0+-100	19701	SFR25H
A4A9R65	2100-3162	7	1	RESISTOR-TRMR 200K 10% TKF SIDE-ADJ 17-T	73138	89PR200K
A4A9R66	2100-3054	6	1	RESISTOR-TRMR 50K 10% TKF SIDE-ADJ 17-TR	73138	89PR50K
A4A9R67	0698-0085	0	1	RESISTOR 2.61K 1% .125W TF TC=0+-100	19701	SFR25H
A4A9R68	0698-0085	0	1	RESISTOR 2.61K 1% .125W TF TC=0+-100	19701	SFR25H
A4A9R69	0698-3260	9	1	RESISTOR 464K 1% .125W TF TC=0+-100	19701	SFR25H
A4A9R70*	0698-8826	3	1	RESISTOR 825K +-1% .125W TF TC=0+-100	19701	SFR25H
A4A9R71	0757-0199	3	1	RESISTOR 21.5K +-1% .125W TF TC=0+-100	19701	SFR25H
A4A9R72*	0757-0467	8	1	RESISTOR 121K +-1% .125W TF TC=0+-100	19701	SFR25H
A4A9R74*	0757-0463	4	1	RESISTOR 82.51: +-1% .125W TF TC=0+-100	19701	SFR25H
A4A9R75	0698-3156	2	1	RESISTOR 14.7K 1% .125W TF TC=0+-100	19701	SFR25H
A4A9R76	0757-0465	6	1	RESISTOR 100K +-1% .125W TF TC=0+-100	19701	SFR25H
A4A9R77	0757-0442	9	1	RESISTOR 10K +-1% .125W TF TC=0+-100	19701	SFR25H
A4A9R78	0757-0280	3	1	RESISTOR 1K +-1% .125W TF TC=0+-100	19701	SFR25H
A4A9R79	0757-0280	3	1	RESISTOR 1K +-1% .125W TF TC=0+-100	19701	SFR25H
A4A9R80	0757-0280	3	1	RESISTOR 1K +-1% .125W TF TC=0+-100	19701	SFR25H
A4A9R81	0757-0280	3	1	RESISTOR 1K +-1% .125W TF TC=0+-100	19701	SFR25H
A4A9R82	0698-0084	9	1	RESISTOR 2.15K 1% .125W TF TC=0+-100	19701	SFR25H
A4A9R83*	0757-0438	3	1	RESISTOR 5.11K +-1% .125W TF TC=0+-100	19701	SFR25H
A4A9R84*	0757-0462	3	1	RESISTOR 75K +-1% .125W TF TC=0+-100	19701	SFR25H
A4A9R85*	0757-0467	8	1	RESISTOR 121K +-1% .125W TF TC=0+-100	19701	SFR25H
A4A9R86*	0757-0289	2	1	RESISTOR 13.3K +-1% .125W TF TC=0+-100	19701	SFR25H
A4A9R87*	0757-0417	8	1	RESISTOR 562 +-1% .125W TF TC=0+-100	19701	SFR25H
A4A9RT1	0837-0007	2	1	THERMISTOR DISC 10K-OHM TC=-4.4%/C-DEG	15801	JA41J1
A4A9RT2	0837-0380	4	1	THERMISTOR TUB WITH AXL LEADS 50K-OHM		MSC 503K
A4A9RT3	0837-0380	4	1	THERMISTOR TUB WITH AXL LEADS 50K-OHM		MSC 503K
A4A9RT4	0837-0007	2	1	THERMISTOR DISC 10K-OHM TC=-4.4%/C-DEG	15801	JA41J1
A4A9RT5	0837-0393	9	1	THERMISTOR DISC 5K-OHM		1DC502K-270-S
A4A9TP1	1251-0600	0	1	CONNECTOR-SGL CONT PIN 1.14-MM-BSC-SZ SQ	27264	16-06-0034
A4A9TP2	1251-0600	0	1	CONNECTOR-SGL CONT PIN 1.14-MM-BSC-SZ SQ	27264	16-06-0034
A4A9U1	1826-0990	0	1	IC OP AMP GP DUAL 8-DIP-C PKG	04713	MC1458U
A4A9U2	1820-0468	5	1	IC DCDR TTL BCD-TO-DEC 4-TO-10-LINE 4-IN	01295	SN7445N

**Indicates factory-selected value*

HP Part Number 85662-60225

A4A9 IF Control Assembly

Reference Designatior	HP Part Number	C D	Qty	Description	Mfr Code	Mfr Part Number
A4A9U3	1858-0076	(	1	TRANSISTOR ARRAY 14-PIN PLSTC TO-116	04713	MPQ2907P
A4A9U4	1858-0076	(	1	TRANSISTOR ARRAY 14-PIN PLSTC TO-116	04713	MPQ2907P
A4A9U5	1810-0277		1	NETWORK-RES 10-SIP 2.2K OHM X 9	91637	MSP10A01
A4A9U6	1820-0468		1	IC DCDR TTL BCD-TO-DEC 4-TO-10-LINE 4-IN	01295	SN7445N
A4A9U7	1820-1195		1	IC FF TTL LS D-TYPE PDS-EDGE-TRIG COM CL	01295	SN74LS175N
A4A9U8	1858-0077	.	1	TRANSISTOR ARRAY 14-PIN PLSTC TO-116	04713	MPQ2222P
A4A9U9	1820-0471	(	1	IC INV TTL HEX 1-INP	01295	SN7406N
A4A9U10	1820-1196	E	1	IC FF TTL LS D-TYPE POS-EDGE-TRIG COM CL	01295	SN74LS174N
A4A9U11	1820-0468	'	1	IC DCDR TTL BCD-TO-DEC 4-TO-10-LINE 4-IN	01295	SN7445N
A4A9U12	1810-0280	E	1	NETWORK-RES IO-SIP 10.OK OHM X 9	91637	MSP10A01
A4A9U13	1820-1216	3	1	IC DCDR TTL LS 3-TO-8-LINE 3-INP	01295	SN74LS138N
A4A9U14	1820-1196	E	1	IC FF TTL LS D-TYPE PDS-EDGE-TRIG COM CL	01295	SN74LS174N
A4A9U15	1820-0471	(	1	IC INV TTL HEX 1-INP	01295	SN7406N
A4A9U16	1858-0076	(	1	TRANSISTOR ARRAY 14-PIN PLSTC TO-116	04713	MPQ2907P
A4A9U17	1820-1196	E	1	IC FF TTL LS D-TYPE POS-EDGE-TRIG COM CL	01295	SN74LS174N
A4A9U18	1820-1196	E	1	IC FF TTL LS D-TYPE PDS-EDGE-TRIG CDM CL	01295	SN74LS174N
A4A9U19	1820-0471	(	1	IC INV TTL HEX 1-INP	01295	SN7406N
A4A9U20	1820-1196	E	1	IC FF TTL LS D-TYPE POS-EDGE-TRIG COM CL	01295	SN74LS174N
A4A9U21	1820-2024	3	1	IC DRVR TTL LS LINE DRVR DCTL	01295	SN74LS244N
A4A9U22	1810-0280	E	1	NETWORK-RES 10-SIP 10.OK OHM X 9	91637	MSP10A01
A4A9VR1	1902-3203	E	1	DIODE-ZNR 14.7V 5% DO-35 PD=.4W	04713	
A4A9VR2	1902-0041	4	1	DIODE-ZNR 5.11V 5% DO-35 PD=.4W	04713	
A4A9W1	1159-0005	C	1	RESISTOR-ZERO OHMS 22 AWG LEAD DIA	55210	L-2007-1

Analyzer Repair Inc

**Indicates factory-selected value*

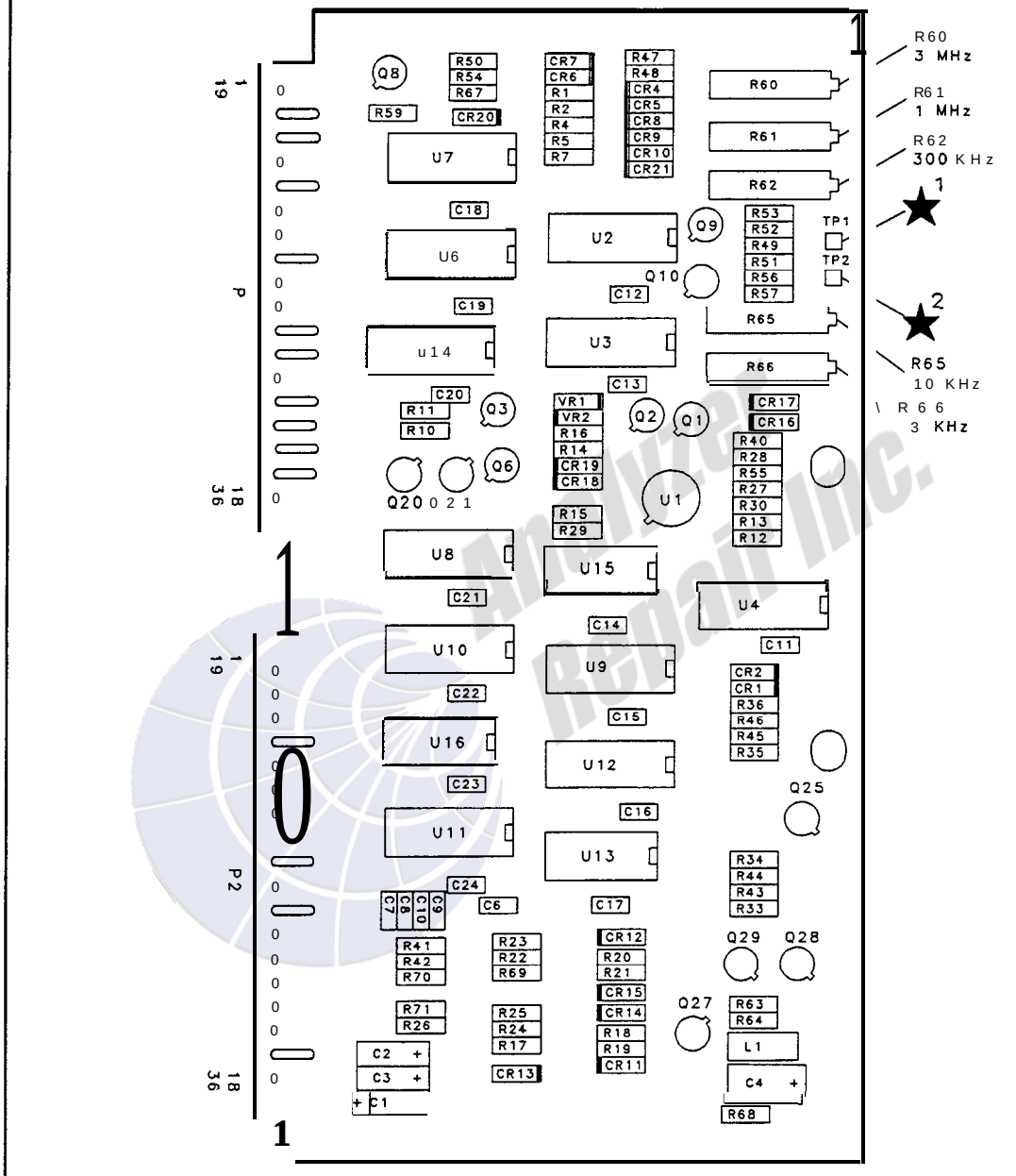

A4A9 IF Control Component Locations, 85662-60173

(Option H96 Tab)

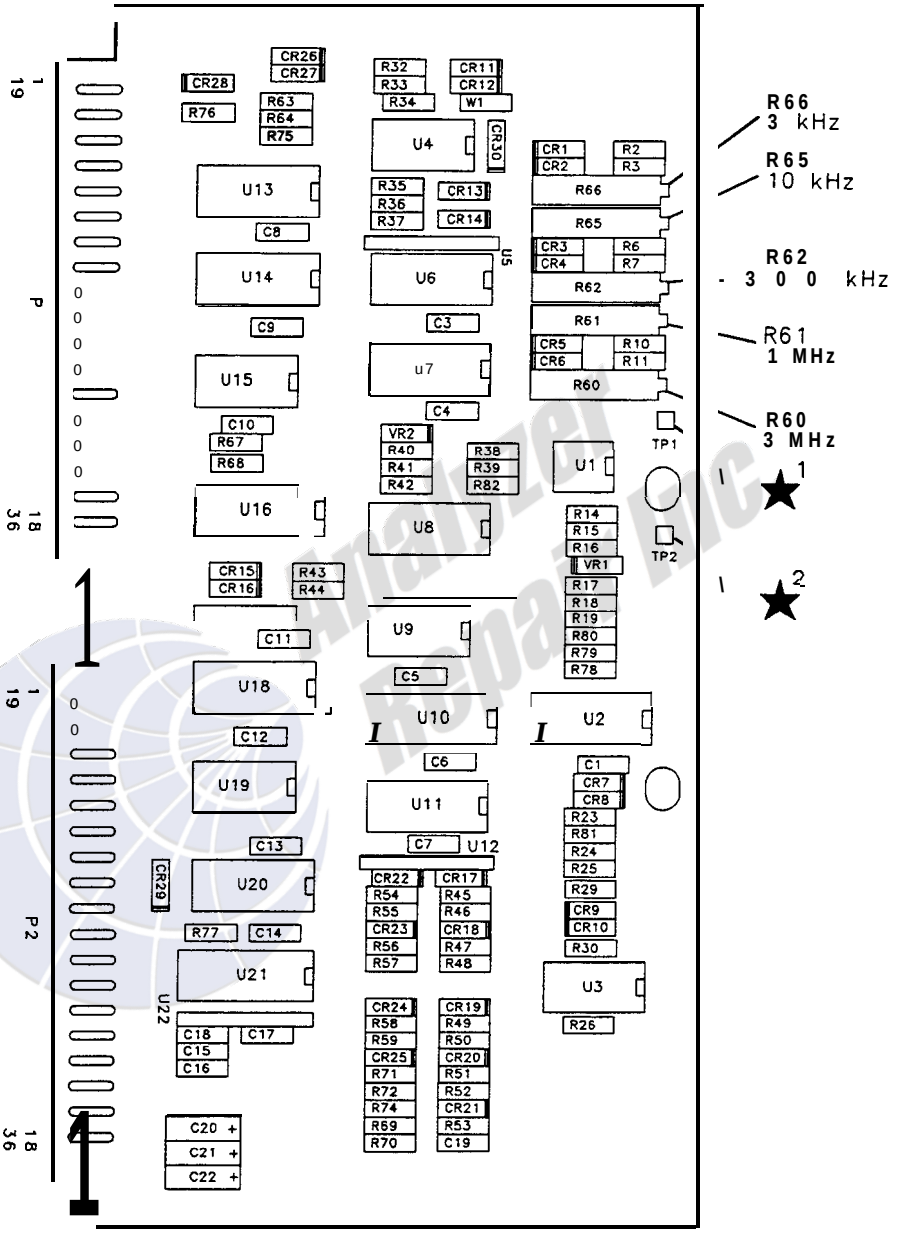

A4A9 IF Control Component Locations, 85662-60201

(Option H96 Tab)

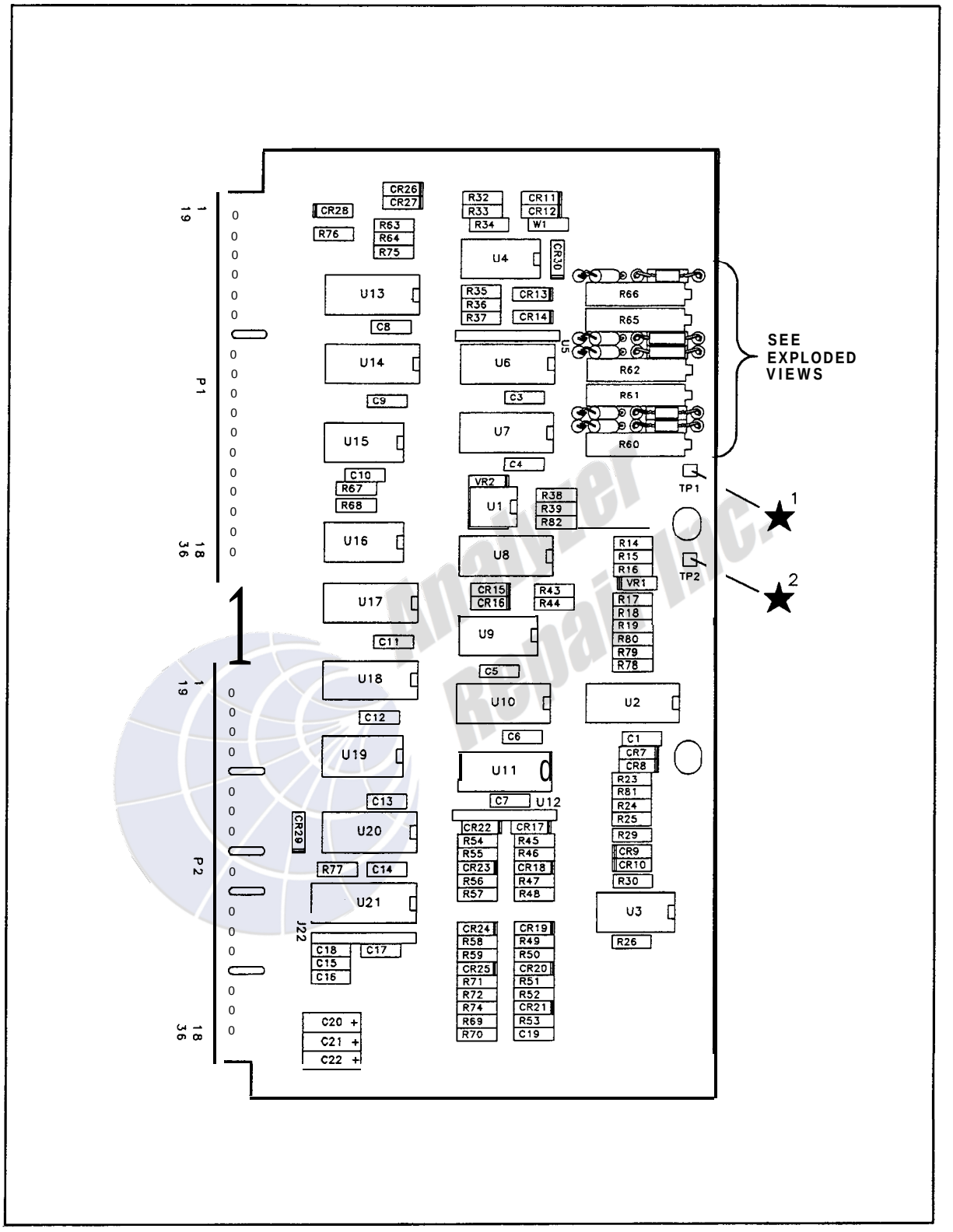

A4A9 IF Control Component Locations, 85662-60225 (1 of 2)

(Option H96 Tab)

EXPLODED VIEWS

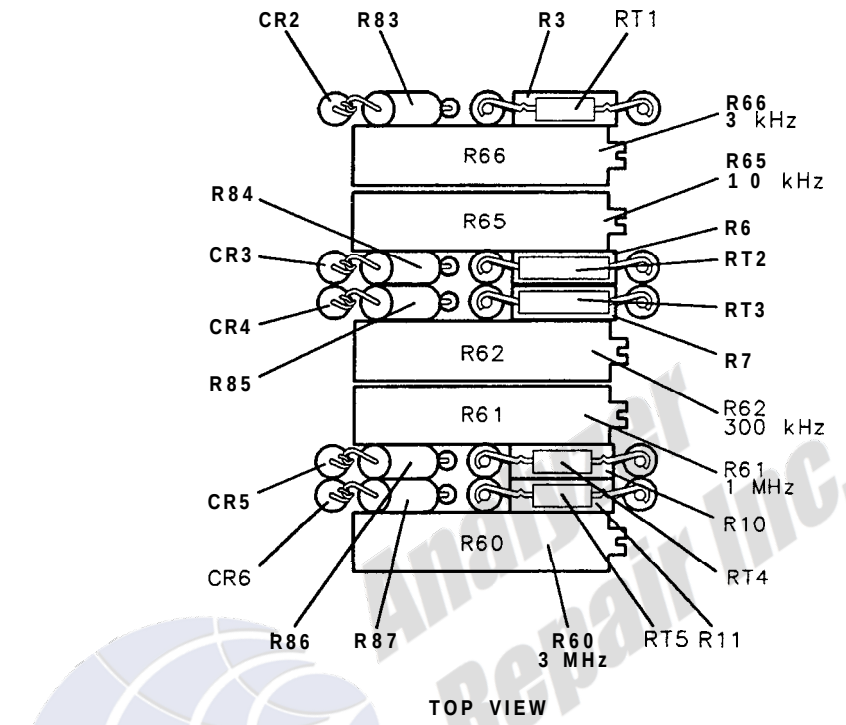

TOP VIEW

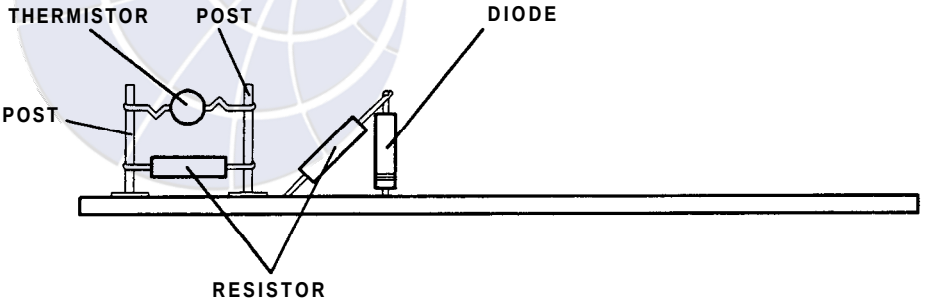

EXAMPLE OF COMPONENT LAYOUT, SIDE VIEW

A4A9 IF Control Component Locations, 85662-60225 (2 of 2)

(Option H96 Tab)

A4A9 IF CONTROL
85662-60173 (OPTION H96)
(SERIAL PREFIXES: 2517A – 2810A)

P1

PIN	SIGNAL	TO/FROM	FUNCTION BLOCK
1	REC CAL	A4A1P2-2	A
19	ALOG	A4A1P1-12	A
2	REC ZERO	A4A1P2-1	A
20	BLOG	A4A1P1-8	A
3	CRT DSBL	A1A5P1-7,25	E
21	BW68	A4A4P1-10	E
4	BW7	A4A8P1-10	E
22	LTIO	A4A10J1-49	B
5	BW63	A4A8P1-11	E
23	ADR6	A4A10J1-23	B
6	A1$\overline{dB}$	A4A8P1-7	D
24	ADR2	A4A10J1-25	B
7	A2$\overline{dB}$	A4A8P1-8	D
25	ADR4	A4A10J1-27	B
8	SG2$\overline{B}$-2	A4A5P1-10	D
26	ADR3	A4A10J1-26	B
9	SG2$\overline{B}$-1	A4A5P1-9	D
27	ADR1	A4A10J1-24	B
10	SG1$\overline{B}$	A4A5P1-8	D
28	10B12	A4A10J1-15	B
11	SWITCH	A4A8P1-7	E
29	10B14	A4A10J1-17	A
12	BW5	A4A8,MA3, A4A4	E
30	10B15	A4A10J1-18	A
13	LOG/LIN	A4A2,MA3	F
31	10B13	A4A10J1-16	A
14	OS1$\overline{B}$	A4A1P1-8	D
32	VBWG	A4A1P1-2	A
15	OS2$\overline{B}$-1	A4A1P1-19	D
33	VBWC	A4A1P1-3	A
16	OS2$\overline{B}$-2	A4A1P1-10	D
34	VBWB	A4A1P1-4	A
17	GND		G
35	VBWA	A4A1P1-5	A
18	LG2$\overline{B}$	A4A2P2-7	D
36	LG1$\overline{B}$	A4A3P2-7	D

P2

PIN	SIGNAL	TO/FROM	FUNCTION BLOCK
1	10B11	A4A10J1-14	A
19	10B5	A4A10J1-9	A
2	10B9	A4A10J1-12	A
20	10B8	A4A10J1-11	A
3	10B7	A4A10J1-10	A
21	10B1$\overline{B}$	A4A10J1-13	A
4	A4dB	A4A5P2-16	C
22	A2dB	A4A5P2-17	C
5	A8dB	A4A5P2-15	C
23	GND		G
6	GND		G
24	GND		G
7	AVdB	A4A5P2-5	C
25	10B5	A4A10J1-8	A
8	GND		G
26	10B3	A4A10J1-6	A
9	GND		G
27	10B1	A4A10J1-4	A
10	GND		G
28	10B$\overline{B}$	A4A10J1-3	A
11	GND		G
29	10B2	A4A10J1-5	A
12	30Hz	A4A7P2-1	E
30	10B4	A4A10J1-7	A
13	NC	A4A7P2-2	E
31	GND		G
14	300Hz	A4A7P2-7	E
32	GND		G
15	100Hz	A4A7P2-8	E
33	GND		G
16	+5V		G
34	+5V		G
17	−15V		G
35	−15V		G
18	+15V		G
36	+15V		G

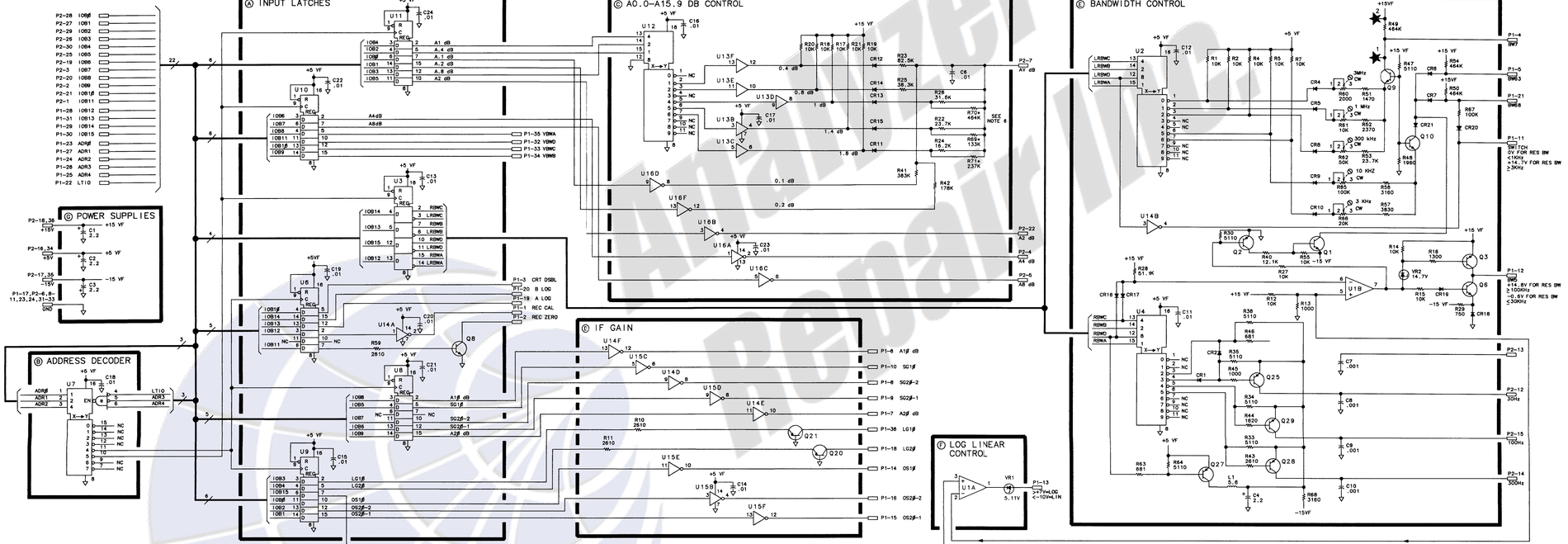

NOTES:

1. REFERENCE DESIGNATORS WITHIN THIS ASSEMBLY ARE ABBREVIATED. FOR COMPLETE REFERENCE DESIGNATION, PREFIX ABBREVIATION WITH ASSEMBLY DESIGNATION.
2. UNLESS OTHERWISE INDICATED: RESISTANCE IS IN OHMS (Ω) CAPACITANCE IS IN MICROFARADS (μF) INDUCTANCE IS IN MICROHENRIES (μH)
3. UNLESS OTHERWISE INDICATED: SIGNALS ENTER AT LEFT SIDE OR TOP AND EXIT AT RIGHT SIDE OR BOTTOM OF FUNCTION BLOCKS.
4. MNEMONIC TABLE:

MNEMONIC	DESCRIPTION
AV DB, A1 DB, A2 DB, A4 DB, A8 DB, A10 DB	ATTENUATOR STEPS FOR A4A5 STEP GAIN
A1$\overline{B}$ DB, A2$\overline{B}$ DB	ATTENUATOR STEPS FOR A4A8 ATTEN-BW FILTER
ADR$\overline{B}$–4	INSTRUMENT BUS ADDRESS BITS
ALOG, BLOG	LOG EXPAND CONTROLS FOR AA1 VIDEO PROCESSOR
BW5, BW7, BW63, BW68	BANDWIDTH CONTROL LINES
10B$\overline{B}$–15	INSTRUMENT BUS DATA BITS
LG1$\overline{B}$, LG2$\overline{B}$, LOG/LIN	LINEAR GAIN STEPS AND CONTROL FOR LOG AMPLIFIERS
LTIO	LOW = TOP BOX I/O
OS1$\overline{B}$, OS2$\overline{B}$-1, OS2$\overline{B}$-2	OFFSET GAIN STEPS FOR AA1 VIDEO PROCESSOR
REC CAL, REC ZERO, SG1$\overline{B}$, SG2$\overline{B}$-1, SG2$\overline{B}$-2	RECORDER CALIBRATE RECORDER ZERO STEP GAIN 10 DB STEP GAIN 20 DB / 1 STEP GAIN 20 DB / 2
VBWA, VBWB, VBWC, VBWD	VIDEO BANDWITH CONTROL LINES

5. UNLESS OTHERWISE INDICATED LOGIC LEVELS ARE:
   +2.0V TO +6.0V = LOGIC '1' HIGH=H
   0V TO +0.8V = LOGIC '0' LOW=BLANK
6. R69-, R70-, AND R71- ARE FACTORY-SELECTED COMPONENTS. TYPICAL VALUES ARE LISTED ON THE SCHEMATIC. ACCEPTABLE VALUES FOR THESE COMPONENTS ARE LISTED BELOW.

R69-	196KΩ–348KΩ
R70-	215KΩ–383KΩ
R71-	147KΩ–261KΩ

7. U13A,U14C,U15A, AND U16E ARE NOT USED.

A4 A9

A4A9 IF CONTROL, SCHEMATIC DIAGRAM

Option 462

HP 85662A Option 462 is the IF-Display Section that is used with the HP 8566B Option 462 and the HP 8568B Option 462 Spectrum Analyzers. This is the Impulse Bandwidth/6 dB Bandwidth option. Resolution bandwidths from 1 kHz through 3 MHz are impulse bandwidths. Resolutions bandwidths from 10 Hz through 300 Hz are 6 dB bandwidths.

Option 462 Assemblies

The following Option 462 assemblies are covered in this manual:

A4A4 Bandwidth Filter (85662-60184)

A4A7 3 MHz Bandwidth Filter (85662-60186)

A4A8 Attenuator-Bandwidth Filter (85662-60185)

A4A9 IF Control (85662-60187, 85662-60211, 85662-60223)

A4A4 Bandwidth Filter (85662-60184)

The parts list, the component location, and the schematic diagram for this assembly are located in this section of the manual.

A4A7 3 MHz Bandwidth Filter (85662-60186)

The parts list for this assembly is located in this section. The component locations and the schematic diagram for this assembly are located in A4A7 section of this manual.

A4A8 Attenuator-Bandwidth Filter (85662-60185)

The parts list, the component location, and the schematic diagram for this assembly are located in this section of the manual.

A4A9 IF Control (85662-60 187, 85662-60211, 85662-60223)

This assembly has three versions. The circuit description and the troubleshooting information for the Option 462 A4A9 versions are located in this section. The parts lists, the component locations, and the schematic diagrams for each version are also located in this section.

Analyzer Repair Inc.

A4A9 IF Control, Circuit Description

Control information for A4 IF-Video assembly is transmitted over the Instrument Bus from the Al5 Controller and decoded by the A4A9 IF Control.

Address Decoder Ⓑ

The Address Decoder monitors ADR O-4 and activates the input latches for addresses 20 and 21 when control line LTIO goes low. Address 20 activates input latches U10, U14, and U17 (U6, U8, and U9 in early versions of A4A9). Address 21 activates input latches U7, U18, and U20 (U3, U10, and U11 in early versions of A4A9). Table 7 of the troubleshooting information shows the line levels of the ADR control lines for addresses 20 and 21.

Input Latches Ⓐ

Input latches hold the IOB levels present at the input of the latch when the address decoder activates the input latch. Six input latches are activated (clocked) by 2 control lines (Address 20 and Address 21) from the Address Decoder Ⓑ. For example, when Address 20 goes high, input latches U10, U14, and U17 (U6, U8, and U9 in early versions of A4A9) are activated. The levels of all sixteen IOB lines, IOBO through IOB15, are held at those same levels at the outputs of U10, U14, and U17.

A0.0 to A15.9 dB Control Ⓒ

The A0.0 to A15.9 dB Control circuitry provides attenuation control voltages for the A4A5 Step Gain. Up to 14 dB of attenuation is accomplished by switching on discrete attenuation steps on the A4A5 Step Gain via the A8dB, A4dB, and A2dB control switching lines. The smaller attenuation steps (0.1 dB through 1.9 dB) are accomplished by controlling the amount of dc current through a PIN diode attenuator on A4A5. One of the outputs of U11 goes low when a particular step of attenuation is selected. The output of U19A also goes low when an odd step of attenuation is desired (0.1 dB, 0.3 dB, 1.5 dB, and so forth). The fixed resistors tied to edge- connector pin P2-7 determine the amout of current through (and hence the attenuation of) the PIN diode attenuator. The operation of the attenuator is described in A4A5.

IF Gain Control Ⓓ

The IF Gain Control interfaces with A4A5 Step Gain, the Log Amplifiers in A4A2, A4A3, and A4A1 Video Processor. Table 5 shows the conditions under which the steps are used.

Bandwidth Control Ⓔ

Bandwidths from 3 MHz to 100 kHz (BW $\geq$ +14.8V)

These bandwidths are produced in the 21.4 MHz IF by four parallel tank circuits (two in A4A4 Bandwidth Filter and two on A4A8 Attenuator-Bandwidth Filter). Their Q (which determines bandwidth) is controlled by PIN diodes used as variable resistors. The resistance of these PIN diodes is determined by the average current through them, which is generated by Q9. Either R60, R61, or R62 is switched in by U2, depending on which bandwidth had been selected. These potentiometers (3 MHz, 1 MHz, and 300 kHz) determine the amount of current sunk by Q9, which in turn determines the bandwidth. If no current is sunk by Q9,

the filters go to their highest Q (determined by factory-selected resistors), which yields the 100 kHz bandwidth.

Bandwidths from 30 kHz to 3 kHz (BW7 = −0.6V)

These bandwidths are produced in the 21.4 MHz IF by five crystal filters (two in A4A8 and three in A4A4). Their Q (which determines bandwidth) is controlled by PIN diodes, the same as for the wider bandwidths. Refer to the preceding discussion of the wider bandwidths. Q10 is the current sink for bandwidths from 30 kHz to 3 kHz. The amount of current it sinks is selected by U2 and adjusted by potentiometers R65 and R66 (10 kHz and 3 kHz), depending on which bandwidth is selected. If no current is sunk by Q10, the filters go to their lowest Q (determined by factory-selected resistors), which yields the 30 kHz bandwidth. Q1 should be off except for the 3 MHz to 100 kHz bandwidths.

Bandwidths from 1 kHz to 10 Hz (SWITCH = 0V)

These bandwidths are produced in the 3 MHz IF (A4A7) by five crystal filters. The Q of these filters is controlled by resistors which are switched in by diodes. These, in turn, are controlled by Q25, Q26, Q28, and Q29. The transistors switch lines which are named after the bandwidths they produce. Q27 is on (saturated) only for bandwidths 1 kHz through 10 Hz.

Analyzer Repair Inc.

A4A9 IF Control, Troubleshooting

If the BW5 control line is not switching, Q3 is most likely defective. If Q3 is found to be defective, check Q6 to determine if it has failed also.

Figure 1 is reproduced from the troubleshooting for the A4A5 Step Gain. It shows the results of a quick test to determine proper operation of the 0.0 to 1.9 dB attenuator section of the A0.0 to A15.9 dB control. As the figure shows, the steps are not exactly 0.1 dB. If the steps are not continuously increasing (monotonic), either a control line is not switching or a switching diode is defective. Table 7 will be useful in determining when a control line is active.

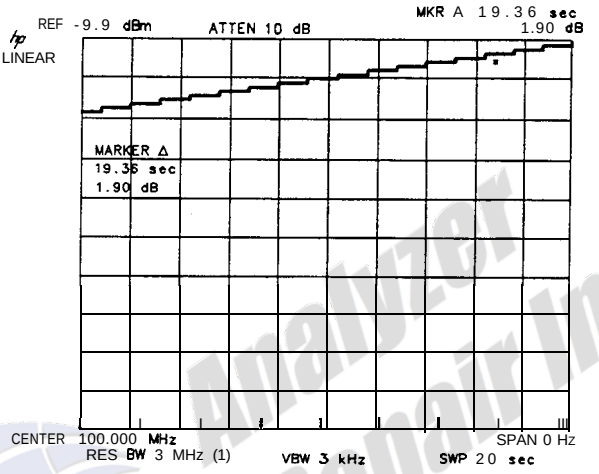

Note

Center Frequency readout will be 20.000 000 MHz for an HP 8568B/HP 85678.

Figure 1. 0.1 dB Step Gain Display

The absolute step amplitudes can be determined with the MARKER A function. The reference steps are 0.0 dB and 0.9 dB. In the Linear mode the error should be less than f0.12 dB.

The 1 dB, 1.4 dB, and 1.8 dB steps are controlled by factory selected resistors. If one of these steps is in error by more than ± 0.12 dB in the Linear mode, refer to the adjustment section of the Performance Tests and Adjustments Manual for the procedure to determine the correct value. The other steps should be f0.2 dB in the Linear mode.

Tables 1 through 8 provide information that is useful in troubleshooting the A4A9 IF Control Assembly.

Analyzer Repair Inc.

Table 1. 0.0 to -1.9 dB Control Truth Table (Levels at Output of Latch U20)*

Control Line	Reference Level (dBm)																			
	0.0	−0.1	−0.2	−0.3	−0.4	−0.5	−0.6	−0.7	−0.8	−0.9	−1.0	−1.1	−1.2	−1.3	−1.4	−1.5	−1.6	−1.7	−1.8	−1.9
A.1 dB	H		H		H		H		H		H		H		H		H		H	
A.2 dB			H	H			H	H					H	H			H	H		
A.4 dB			H	H	H	H							H	H	H	H				
A.8 dB	H	H									H	H								
A1 dB	H	H	H	H	H	H	H	H	H	H										
* Latch U11 on early versions of A4A9 IF Control																				

Table 2. 0 to -9 dB Control Truth Table (Levels at Output of Latches U18 and U20)*

Reference Level (dBm)	A2 dB	A4 dB	A8 dB
0 (−1)			H
−2 (−3)	H	H	
−4 (−5)		H	
−6 (−7)	H		
−8 (−9)			
* Latches U10 and U11 on early versions of A4A9 IF Control			

Table 3. Resolution Bandwidth Truth Table

Resolution Bandwidth	RBW D	RBW C	RBW B	RBW A
3 MHz	H	H	H	H
1 MHz	H	H	H	
300 kHz	H	H		H
100 kHz	H	H		
30 kHz	H		H	H
10 kHz	H		H	
3 kHz	H			H
1 kHz		H	H	
300 Hz		H		H
100 Hz		H		
30 Hz			H	H
10 Hz			H	

Analyzer Repair Inc.

Table 4. Video Bandwidth Truth Table

Video Bandwidth	VBW D	VBW C	VBW B	VBW A
3 MHz	H	H	H	H
1 MHz	H	H	H	
300 kHz	H	H		H
100 kHz	H	H		
30 kHz	H		H	H
10 kHz	H		H	
3 kHz	H			H
1 kHz		H	H	
300 Hz		H		H
100 Hz		H		
30 Hz			H	H
10 Hz			H	
3 Hz				H
1 Hz				

Analyzer Repair Inc.

Table 5. 10 dB Gain Step Truth Table
(Levels at Output of Latches U10 and U17)*

Reference Level Res BW ≥3 kHz	dBm			-10	-20	-30	-40	-50	-60	-70	-80	-90	-100	-110
Reference Level Res BW ≤1 kHz	dBm	-10	-20	-30	-40	-50	-60	-70	-80	-90	-100	-110	-120	−130
A10 dB	Log		H											
	Lin		H											
A20 dB	Log	H												
	Lin	H												
SG10	Log				H		H		H	H	H	H	H	H
	Lin				H		H		H	H	H	H		
SG20-1	Log					H	H	H	H	H	H	H	H	H
	Lin					H	H	H	H	H	H	H		
SG20-2	Log							H	H	H	H	H	H	H
	Lin							H	H	H	H	H		
OS10	Log									H		H		H
	Lin													
OS20-1	Log										H	H	H	H
	Lin													
OS20-2	Log												H	H
	Lin													
LG10	Log													
	Lin									H		H		
LG20	Log													
	Lin										H	H		

Input attenuation setting at 0 dB; shift attenuator (for extended ranges).

* Latches U8 and U9 on early version of A4A9 IF Control.

Anaheim Repair Inc.

Table 6. Bandwidth Control Lines
(All Voltages Approximate)

Resolution Bandwidth	Control Links								
	BW 5	BW 63	BW 68	BW 7	Switch	300 Hz	100 Hz	30 Hz	10 Hz
3 MHz	+14.8 V	−14.0 V	−14.0 V	+11.6 V	+14.7 V	<−10 V	<−10 V	<−10 V	<−10 V
1 MHz	+14.8 V	−14.0 V	−14.0 V	+13.5 V	+14.7 V	<−10 V	<−10 V	<−10 V	<−10 V
300 kHz	+14.8 V	−14.0 V	−14.0 V	+14.2 V	+14.7 V	<−10 V	<−10 V	<−10 V	<−10 V
100 kHz	+14.8 V	-14.0 V	-14.0 V	+14.3 V	+14.7 V	<−10 V	<−10 V	<−10 V	<−10 V
30 kHz	-0.6 V	+14.3 V	+14.3 V	+14.3 V	+14.7 V	<−10 V	<−10 V	<−10 V	<−10 V
10 kHz	-0.6 V	+9.3 V	+9.3 V	+14.3 V	+14.7 V	<−10 V	<−10 V	<−10 V	<−10 V
3 kHz	-0.6 V	+9.0 V	+9.0 V	+14.3 V	+14.7 V	<−10 V	<−10 V	<−10 V	<−10 V
1 kHz	-0.6 V	+14.3 V	+9.2 V	+14.3 V	+0.0 V	<−10 V	<−10 V	<−10 V	<−10 V
300 Hz	-0.6 V	+14.3 V	+9.2 V	+14.3 V	+0.0 V	>4 V	<−10 V	<−10 V	<−10 V
100 Hz	-0.6 V	+14.3 V	+9.2 V	+14.3 V	+0.0 V	<−10 V	>−4 V	<−10 V	<−10 V
30 Hz	−0.6 V	+14.3 V	+9.2 V	+14.3 V	+0.0 V	<−10 V	<−10 V	>4 V	<−10 V
10 Hz	−0.6 V	+14.3 V	+9.2 V	+14.3 V	+0.0 V	<−10 V	<−10 V	>4 V	>4 V

Table 7. Address Line Truth Table

Address	ADR 4 (16)	ADR 3 (8)	ADR 2 (4)	ADR 1 (2)	ADR 0 (1)
Address 20	H	L	H	L	L
Address 21	H	L	H	L	H

Table 8. Log Expand Truth Table

dB/DIV	B Log	A Log
10		
5		H
2	H	
1	H	H

HP Part Number 85662-60184

A4A4 Bandwidth Filter

Reference Designation	HP Part Number	C D	Qty	Description	Mfr Code	Mfr Part Number
A4A4	85662-60184	1	1	BOARD ASSEMBLY, BANDWIDTH FILTER (OPTION 462)	28480	85662-60184
A4A4C1	0160-4832	4	1	CAPACITOR-FXD .01UF +-10% 100VDC CER	04222	SA101C103KAAH
A4A4C2	0160-4832	4	1	CAPACITOR-FXD .01UF +-10% 100VDC CER	04222	SA101C103KAAH
A4A4C3	0160-5899	5	1	CAPACITOR-FXD 7.5PF +-.5PF 200VDC CER 0+		MA12C0G2D7R5D
A4A4C4	0160-4832	4	1	CAPACITOR-FXD .01UF +-10% 100VDC CER	04222	SA101C103KAAH
A4A4C5	0160-4832	4	1	CAPACITOR-FXD .01UF +-10% 100VDC CER	04222	SA101C103KAAH
A4A4C6	0160-4833	5	1	CAPACITOR-FXD .022UF +-10% 100VDC CER	04222	SA201C223KAAH
A4A4C7	0160-4832	4	1	CAPACITOR-FXD .01UF +-10% 100VDC CER	04222	SA101C103KAAH
A4A4C8	0160-4791	4	1	CAPACITOR-FXD 10PF +-5% 100VDC CER 0+-30	04222	SA102A100JAAH
A4A4C9	0121-0059	7	1	CAPACITOR-V TRMR-CER 2-8PF 350V PC-MTG	52763	304-324-139
A4A4C10*	0160-4795	8	1	CAPACITOR-FXD 4.7PF +-.5PF 100VDC CER 0+	04222	SA102A4R7DAAH
A4A4C11	0160-4832	4	1	CAPACITOR-FXO .01UF +-10% 100VDC CER	04222	SA101C103KAAH
A4A4C13	0160-4832	4	1	CAPACITOR-FXD .01UF +-10% 100VDC CER	04222	SA101C103KAAH
A4A4C14	0160-4832	4	1	CAPACITOR-FXD .01UF +-10% 100VDC CER	04222	SA101C103KAAH
A4A4C15	0160-4574	1	1	CAPACITOR-FXD 1000PF +-10% 100VDC CER	04222	SA101C102KAAH
A4A4C16	0160-0437	7	1	CAP-FXD 12pF 500 V		301-000-P3K0-120J
A4A4C17*	0160-0134	1	1	CAPACITOR-FXD 220PF +-5% 300VDC MICA 0+7	09023	CD15FD221J03
A4A4C18	0160-4832	4	1	CAPACITOR-FXD .01UF +-10% 100VDC CER	04222	SA101C103KAAH
A4A4C19	0121-0036	0	1	CAPACITOR-V TRMR-CER 5.5-18PF 350V PC-MT	52763	304-324-237
A4A4C20	0121-0444	4	1	CAP-VAR 9pF 3pF 160 V	52763	302-450-204
A4A4C21	0160-4832	4	1	CAPACITOR-FXD .01UF +-10% 100VDC CER	04222	SA101C103KAAH
A4A4C22	0160-4832	4	1	CAPACITOR-FXD .01UF +-10% 100VDC CER	04222	SA101C103KAAH
A4A4C23	0160-4832	4	1	CAPACITOR-FXD .01UF +-10% 100VDC CER	04222	SA101C103KAAH
A4A4C24	0160-4832	4	1	CAPACITOR-FXD .01UF +-10% 100VDC CER	04222	SA101C103KAAH
A4A4C25	0160-4832	4	1	CAPACITOR-FXD .01UF +-10% 100VDC CER	04222	SA101C103KAAH
A4A4C26	0160-4832	4	1	CAPACITOR-FXD .01UF +-10% 100VDC CER	04222	SA101C103KAAH
A4A4C27	0160-4832	4	1	CAPACITOR-FXD .01UF +-10% 100VDC CER	04222	SA101C103KAAH
A4A4C28	0140-0194	1	1	CAPACITOR-FXD 110PF +-5% 300VDC MICA	09023	CD15FD111J03
A4A4C29	0160-4832	4	1	CAPACITOR-FXD .01UF +-10% 100VDC CER	04222	SA101C103KAAH
A4A4C30	0160-4832	4	1	CAPACITOR-FXD .01UF +-10% 100VDC CER	04222	SA101C103KAAH
A4A4C31	0160-2207	3	1	CAP-FXD 300pF 300 V MICA	09023	CD15FD301J03
A4A4C32	0160-4832	4	1	CAPACITOR-FXD .01UF +-10% 100VDC CER	04222	SA101C103KAAH
A4A4C33	0160-4833	5	1	CAPACITOR-FXD .022UF +-10% 100VDC CER	04222	SA201C223KAAH
A4A4C34	0160-4832	4	1	CAPACITOR-FXD .01UF +-10% 100VDC CER	04222	SA101C103KAAH
A4A4C35	0160-4832	4	1	CAPACITOR-FXD .01UF +-10% 100VDC CER	04222	SA101C103KAAH
A4A4C36	0160-4832	4	1	CAPACITOR-FXD .01UF +-10% 100VDC CER	04222	SA101C103KAAH
A4A4C37	0160-4791	4	1	CAPACITOR-FXD 10PF +-5% 100VDC CER 0+-30	04222	SA102A100JAAH
A4A4C38*	0160-4795	8	1	CAPACITOR-FXD 4.7pF +-.5pF 100VDC CER	04222	SA102A4R7DAAH
A4A4C39	0121-0059	7	1	CAPACITOR-V TRMR-CER 2-8PF 350V PC-MTG	52763	304-324-139
A4A4C40	0160-4832	4	1	CAPACITOR-FXD .01UF +-10% 100VDC CER	04222	SA101C103KAAH
A4A4C41	0121-0452	4	1	CAPACITOR-V TRMR-AIR 1.3-5.4PF 175V PC-M	74970	187-0103-028
A4A4C43	0121-0452	4	1	CAPACITOR-V TRMR-AIR 1.3-5.4PF 175V PC-M	74970	187-0103-028
A4A4C46	0160-4835	7	1	CAPACITOR-FXD .1UF +-10% 50VDC CER	04222	SA115C104KAAH
A4A4C47	0160-4832	4	1	CAPACITOR-FXD .01UF +-10% 100VDC CER	04222	SA101C103KAAH
A4A4C48	0160-4832	4	1	CAPACITOR-FXD .01UF +-10% 100VDC CER	04222	SA101C103KAAH
A4A4C49	0160-4832	4	1	CAPACITOR-FXD .01UF +-10% 100VDC CER	04222	SA101C103KAAH

**Indicates factory-selected value*

HP Part Number 85662-60184

A4A4 Bandwidth Filter

Reference Designatior	HP Part Number	C D	Qty	Description	Mfr Code	Mfr Part Number
A4A4C50	0160-4832		1	CAPACITOR-FXD .01UF +-10% 100VDC CER	0422;	SA101C103KAAH
A4A4C52	0160-4832		1	CAPACITOR-FXD .01UF +-10% 100VDC CER	0422	SA101C103KAAH
A4A4C53	0160-4832		1	CAPACITOR-FXD .01UF +-10% 100VDC CER	04221	SA101C103KAAH
A4A4C54	0160-4832		1	CAPACITOR-FXD .01UF +-10% 100VDC CER	0422;	SA101C103KAAH
A4A4C55	0160-4833		1	CAPACITOR-FXD .022UF +-10% 100VDC CER	0422	SA201C223KAAH
A4A4C56	0160-4832		1	CAPACITOR-FXD .01UF +-10% 100VDC CER	0422	SA101C103KAAH
A4A4C57	0160-2207		1	CAP-FXD 300pF 300 V MICA	0902:	CD15FD301J03
A4A4C58	0160-4832	4	1	CAPACITOR-FXD .01UF +-10% 100VDC CER	0422	SA101C103KAAH
A4A4C59	0160-4832	4	1	CAPACITOR-FXD .01UF +-10% 100VDC CER	0422;	SA101C103KAAH
A4A4C60	0160-4832	4	1	CAPACITOR-FXD .01UF +-10% 100VDC CER	0422;	SA101C103KAAH
A4A4C61	0160-4832	4	1	CAPACITOR-FXD .01UF +-10% 100VDC CER	0422	SA101C103KAAH
A4A4C62	0160-4574	1	1	CAPACITOR-FXD 1000PF +-10% 100VDC CER	0422	SA101C102KAAH
A4A4C63	0160-4832	4	1	CAPACITOR-FXD .01UF +-10% 100VDC CER	0422	SA101C103KAAH
A4A4C64	0160-4791	4	1	CAPACITOR-FXD 10PF +-5% 100VDC CER 0+-30	0422	SA102A100JAAH
A4A4C65	0121-0059	7	1	CAPACITOR-V TRMR-CER 2-8PF 350V PC-MTG	5276:	304-324-139
A4A4C66*	0160-4795	8	1	CAPACITOR-FXD 4.7PF +-.5PF 100VDC CER	04222	SA102A4R7DAAH
A4A4C67	0121-0036	0	1	CAPACITOR-V TRMR-CER 5.5-18PF 350V PC-MT	5276:	304-324-237
A4A4C68	0160-4832	4	1	CAPACITOR-FXD .01UF +-10% 100VDC CER	0422	SA101C103KAAH
A4A4C69	0160-0437	1	1	CAP-FXD 12pF 500 V		301-000-P3K0-120J
A4A4C70*	0160-0134	1	1	CAPACITOR-FXD 220PF +-5% 300VDC MICA 0+7	09023	CD15FD221J03
A4A4C71	0160-4832	4	1	CAPACITOR-FXD .01UF +-10% 100VDC CER	04222	SA101C103KAAH
A4A4C72	0160-4832	4	1	CAPACITOR-FXD .01UF +-10% 100VDC CER	04222	SA101C103KAAH
A4A4C73	3121-0444	4	1	CAP-VAR 9pF 3pF 160 V	52763	302-450-204
A4A4C74	0121-0444	1	1	CAP-VAR 9pF 3pF 160 V	52763	302-450-204
A4A4C76	3160-4832	4	1	CAPACITOR-FXD .01UF +-10% 100VDC CER	04222	SA101C103KAAH
A4A4C77	0160-4832	4	1	CAPACITOR-FXD .01UF +-10% 100VDC CER	04222	SA101C103KAAH
A4A4C78	1160-4832	4	1	CAPACITOR-FXD .01UF +-10% 100VDC CER	04222	SA101C103KAAH
A4A4C79	1160-4832	4	1	CAPACITOR-FXD .01UF +-10% 100VDC CER	04222	SA101C103KAAH
A4A4C80	0160-4832	4	1	CAPACITOR-FXD .01UF +-10% 100VDC CER	04222	SA101C103KAAH
A4A4C81	1160-4832	1	1	CAPACITOR-FXD .01UF +-10% 100VDC CER	04222	SA101C103KAAH
A4A4C84	0160-2207	3	1	CAP-FXD 300pF 300 V MICA	09023	CD15FD301J03
A4A4C86	0160-4832	1	1	CAPACITOR-FXD .01UF +-10% 100VDC CER	04222	SA101C103KAAH
A4A4C87	0160-4835	7	1	:APACITDR-FXD .1UF +-10% 50VDC CER	04222	SA115C104KAAH
A4A4C88	0160-4835	7	1	CAPACITOR-FXD .1UF +-10% 50VDC CER	04222	SA115C104KAAH
A4A4C89	0160-4832	1	1	CAPACITOR-FXD .01UF +-10% 100VDC CER	04222	SA101C103KAAH
A4A4C90	0160-4832	1	1	CAPACITOR-FXD .01UF +-10% 100VDC CER	04222	SA101C103KAAH
A4A4C91	0160-5902		1	CAPACITOR-FXD 11PF +-5% 200VDC CER 0+-30		MA12C0G2D110J
A4A4C92*	1160-0134	.	1	CAPACITOR-FXD 220PF +-5% 300VDC MICA 0+7	09023	CD15FD221J03
A4A4C93	0160-4832	1	1	CAPACITOR-FXD .01UF +-10% 100VDC CER	04222	SA101C103KAAH
A4A4C94	0160-5902		1	CAPACITOR-FXD 11PF +-5% 200VDC CER 0+-30		MA12C0G2D110J
A4A4C95	0160-4832	1	1	CAPACITOR-FXD .01UF +-10% 100VDC CER	04222	SA101C103KAAH
A4A4C96	0160-5902		1	CAPACITOR-FXD 11PF +-5% 200VDC CER 0+-30		MA12C0G2D110J
A4A4C97*	0160-0134		1	CAPACITOR-FXD 220PF +-5% 300VDC MICA 0+7	09023	CD15FD221J03
A4A4C98	1160-4832		1	CAPACITOR-FXD .01UF +-10% 100VDC CER	04222	SA101C103KAAH
A4A4C99	0160-6634		1	:AP-FXD 9pF 50 V		CC45UJ1H090DYP
A4A4C100	0160-6634		1	:AP-FXD 9pF 50 V		CC45UJ1H090DYP
A4A4C101	0160-6634		1	CAP-FXD 9pF 50 V		CC45UJ1H090DYP
A4A4CR1	901-0047	8	1	DIODE-SWITCHING 20V 75MA 10NS DO-35	71468	

**Indicates factory-selected value*

HP Part Number 85662-60184

A4A4 Bandwidth Filter

Reference Designation	HP Part Number	C D	Qty	Description	Mfr Code	Mfr Part Number
A4A4CR3	1901-0047	8	1	DIODE-SWITCHING 20V 75MA 10NS DO-35	71468	
A4A4CR4	1901-1070	9	1	DIODE-PIN 110V	2848C	
A4A4CR5	1901-1070	9	1	DIODE-PIN 110V	2848C	
A4A4CR6	1901-0535	9	1	DIODE-SCHOTTKY SM SIG		
A4A4CR7	1901-0047	8	1	DIODE-SWITCHING 20V 75MA 10NS DO-35	71468	
A4A4CR8	1901-0535	9	1	DIODE-SCHOTTKY SM SIG		
A4A4CR10	1901-0047	8	1	DIODE-SWITCHING 20V 75MA 10NS DO-35	71468	
A4A4CR12	1901-0047	8	1	DIODE-SWITCHING 20V 75MA 10NS DO-35	71468	
A4A4CR13	1901-1070	9	1	DIODE-PIN 110V	28480	
A4A4CR14	1901-0535	9	1	DIODE-SCHOTTKY SM SIG		
A4A4CR15	1901-0047	8	1	DIODE-SWITCHING 20V 75MA 10NS DO-35	71468	
A4A4CR16	1901-0535	9	1	DIODE-SCHOTTKY SM SIG		
A4A4CR18	1901-0047	8	1	DIODE-SWITCHING 20V 75MA 10NS DO-35	71468	
A4A4CR19	1901-1070	9	1	DIODE-PIN 110V	28480	
A4A4CR20	1901-0047	8	1	DIODE-SWITCHING 20V 75MA 10NS DO-35	71468	
A4A4CR21	1901-1070	9	1	DIODE-PIN 110V	28480	
A4A4CR22	1901-0535	9	1	DIODE-SCHOTTKY SM SIG		
A4A4CR23	1901-0047	8	1	DIODE-SWITCHING 20V 75MA 10NS DO-35	71468	
A4A4CR24	1901-0535	9	1	DIODE-SCHOTTKY SM SIG		
A4A4CR25	1901-1070	9	1	DIODE-PIN 110V	28480	
A4A4CR27	1901-0535	9	1	DIODE-SCHOTTKY SM SIG		
A4A4CR28	1901-0535	9	1	DIODE-SCHOTTKY SM SIG		
A4A4CR29	1901-0047	8	1	DIODE-SWITCHING 20V 75MA 10NS DO-35	71468	
A4A4CR30	1901-0047	8	1	DIODE-SWITCHING 20V 75MA 10NS DO-35	71468	
A4A4E1	9170-0029	3	1	CORE-SHIELDING BEAD	02114	56-590-65A2/4A
A4A4E2	9170-0029	3	1	CORE-SHIELDING BEAD	02114	56-590-65A2/4A
A4A4E3	3170-0029	3	1	CORE-SHIELDING BEAD	02114	56-590-65A2/4A
A4A4E4	9170-0029	3	1	CORE-SHIELDING BEAD	02114	56-590-65A2/4A
A4A4E5	9170-0029	3	1	:ORE-SHIELDING BEAD	02114	56-590-65A2/4A
A4A4E6	3170-0029	3	1	:ORE-SHIELDING BEAD	02114	56-590-65A2/4A
A4A4E7	3170-0029	3	1	:ORE-SHIELDING BEAD	02114	56-590-65A2/4A
A4A4E8	9170-0029	3	1	:DRE-SHIELDING BEAD	02114	56-590-65A2/4A
A4A4E9	9170-0029	3	1	:ORE-SHIELDING BEAD	02114	56-590-65A2/4A
A4A4E10	9170-0029	3	1	:ORE-SHIELDING BEAD	02114	56-590-65A2/4A
A4A4E11	9170-0029	3	1	:ORE-SHIELDING BEAD	02114	56-590-65A2/4A
A4A4E12	9170-0029	3	1	:ORE-SHIELDING BEAD	02114	56-590-65A2/4A
A4A4E13	9170-0029	3	1	:ORE-SHIELDING BEAD	02114	56-590-65A2/4A
A4A4E14	9170-0029	3	1	:ORE-SHIELDING BEAD	02114	56-590-65A2/4A
A4A4E15	9170-0029	3	1	:ORE-SHIELDING BEAD	02114	56-590-65A2/4A
A4A4E16	9170-0029	3	1	CORE-SHIELDING BEAD	02114	56-590-65A2/4A
A4A4E17	9170-0029	3	1	:ORE-SHIELDING BEAD	02114	56-590-65A2/4A
A4A4L1	9100-1641	0	1	INDUCTOR RF-CH-MLD 240UH +-5% .166D-INX.	99800	1537-94
A4A4L2	9100-0539	3	1	INDUCTOR RF-CH-MLD 10UH +-5% .156D-INX.3	24226	15M102J
A4A4L3	9140-0398	6	1	INDUCTOR RF-CH-MLD 12UH +-5% .166D-INX.3	24226	15M122J
A4A4L4	15662-60188	5	1	COIL ASSEMBLY 21 MHZ	28480	85662-60188
A4A4L5	1140-0399	7	1	INDUCTOR RF-CH-MLD 2.2UH +-5% .166D-INX.	24226	15M221J
A4A4L6	9100-3912	2	1	INDUCTOR RF-CH-MLD 15UH +-5% .166D-INX.3	24226	15M152J

**Indicates factory-selected value*

HP Part Number 85662060184

A4A4 Bandwidth Filter

Reference Designatior	HP Part Number	C-D	Qty	Description	Mfr Code	Mfr Part Number
A4A4L7	9140-0453	4	1	INDUCTOR RF-CH-MLD 6.8UH +-5% .166D-INX.	2422E	15M-681J
A4A4L8	9140-0399	7	1	INDUCTOR RF-CH-MLD 2.2UH +-5% .166D-INX.	24226	15M221J
A4A4L9	9100-3560	6	1	INDUCTOR RF-CH-MLD 5.6UH +-5% .166D-INX.	2422E	15M561J
A4A4L10	9100-3560	6	1	INDUCTOR RF-CH-MLD 5.6UH +-5% .166D-INX.	2422E	15M561J
A4A4L12	9100-3560	6	1	INDUCTOR RF-CH-MLD 5.6UH +-5% .166D-INX.	24226	15M561J
A4A4L13	9100-3912	2	1	INDUCTOR RF-CH-MLD 15UH +-5% .166D-INX.3	24226	15M152J
A4A4L14	9100-3560	6	1	INDUCTOR RF-CH-MLD 5.6UH +-5% .166D-INX.	24226	15M561J
A4A4L15	9100-0539	3	1	INDUCTOR RF-CH-MLD 10UH +-5% .156D-INX.3	24226	15M102J
A4A4L16	9100-0539	3	1	INDUCTOR RF-CH-MLD 10UH +-5% .156D-INX.3	24226	15M102J
A4A4L17	9140-0398	6	1	INDUCTOR RF-CH-MLD 12UH +-5% .166D-INX.3	24226	15M122J
A4A4L18	85662-60188	5	1	COIL ASSEMBLY 21 MHZ	28480	85662-60188
A4A4L19	9140-0399	7	1	INDUCTOR RF-CH-MLD 2.2UH +-5% .166D-INX.	24226	15M221J
A4A4L20	9140-0453	4	1	INDUCTOR RF-CH-MLD 6.8UH +-5% .166D-INX.	24226	15M-681J
A4A4L22	9100-3912	2	1	INDUCTOR RF-CH-MLD 15UH +-5% .166D-INX.3	24226	15M152J
A4A4L24	9100-3560	6	1	INDUCTOR RF-CH-MLD 5.6UH +-5% .166D-INX.	24226	15M561J
A4A4L25	9100-3560	6	1	INDUCTOR RF-CH-MLD 5.6UH +-5% .166D-INX.	24226	15M561J
A4A4L26	9100-3560	6	1	INDUCTOR RF-CH-MLD 5.6UH +-5% .166D-INX.	24226	15M561J
A4A4L27	9100-3562	8	1	INDUCTOR RF-CH-MLD 4.7UH +-5% .166D-INX.	24226	15M471J
A4A4L28	9100-3562	8	1	INDUCTOR RF-CH-MLD 4.7UH +-5% .166D-INX.	24226	15M471J
A4A4L29	9100-3562	8	1	INDUCTOR RF-CH-MLD 4.7UH +-5% .166D-INX.	24226	15M471J
A4A4MP1	6960-0016	0	1	LUG-HOLE TR-HD FOR .125-D-HOLE NYL	02768	207-080501-01-0101
A4A4MP2				NOT ASSIGNED		
A4A4MP3	85662-20153	0	1	COVER BANDWIDTH FILTER	28480	85662-20153
A4A4MP4	6960-0016	0	1	LUG-HOLE TR-HD FOR .125-D-HOLE NYL	02768	207-080501-01-0101
A4A4MP5	2190-0401	0	1	WASHER-FL NM ND. 4 .12-IN-ID .312-IN-OD	73734	1470
A4A4MP6	2200-0101	0	1	SCREW-MACH 4-40 .188-IN-LG PAN-HO-POZI	77250	
A4A4MP7	86701-40001	9	2	EXTRACTOR PC	28480	86701-40001
A4A4Q1	1855-0267	5	1	TRANSISTOR J-FET N-CHAN D-MODE TO-92 SI	34677	
A4A4Q2	1853-0007	7	1	TRANSISTOR PNP 213251 SI TO-18 PD=360MW	04713	213251
A4A4Q3	1853-0007	7	1	TRANSISTOR PNP 2N3251 SI TO-18 PD=360MW	04713	2N3251
A4A4Q4	1853-0007	7	1	TRANSISTOR PNP 2N3251 SI TO-18 PD=360MW	04713	2N3251
A4A4Q5	1853-0007	7	1	TRANSISTOR PNP 2N3251 SI TO-18 PD=360MW	04713	2N3251
A4A4Q6	1853-0007	7	1	TRANSISTDR PNP 213251 SI TO-18 PD=360MW	04713	2N3251
A4A4Q7	1853-0007	7	1	TRANSISTDR PNP 2N3251 SI TO-18 PD=360MW	04713	2N3251
A4A4Q8	1854-0404	0	1	TRANSISTOR NPN SI TO-18 PD=360MW	04713	
A4A4Q9	1853-0007	7	1	TRANSISTOR PNP 2N3251 SI TO-18 PD=360MW	04713	2N3251
A4A4Q10	1854-0404	0	1	TRANSISTOR NPN SI TO-18 PD=360MW	04713	
A4A4Q11	1855-0267	5	1	TRANSISTDR J-FET N-CHAN D-MODE TO-92 SI	34677	
A4A4Q12	1854-0404	3	1	TRANSISTOR NPN SI TO-18 PD=360MW	04713	
A4A4Q13	1855-0267	5	1	TRANSISTDR J-FET N-CHAN D-MODE TO-92 SI	34677	
A4A4Q14	1854-0345	3	1	TRANSISTOR NPN 2N5179 SI TO-72 PD=200MW	04713	215179
A4A4R1	0757-0441	3	1	RESISTOR 8.25K +-1% .125W TF TC=0+-100	19701	SFR25H
A4A4R2	3698-3431	5	1	RESISTOR 23.7 1% .125W TF TC=D+-100	19701	SFR25H
A4A4R3*	1698-8819	4	1	RESISTOR 3.83 +-1% .125W TF TC=0+-100	91637	CMF-55-1
A4A4R4	0757-0401	3	1	RESISTOR 100 +-1% .125W TF TC=0+-100	19701	SFR25H
A4A4R5	0757-0442	9	1	RESISTOR 10K +-1% .125W TF TC=0+-100	19701	SFR25H
A4A4R6	1757-0397	3	1	RESISTOR 68.1 +-1% .125W TF TC=0+-100	19701	SFR25H
A4A4R7	6698-3155	1	1	RESISTOR 4.64K 1% .125W TF TC=0+-100	19701	SFR25H

**Indicates factory-selected value*

HP Part Number 85662-60184

A4A4 Bandwidth Filter

Reference Designatio	HP Part Number	C D	Qty	Description	Mfr Code	Mfr Part Number
A4A4R8	0757-0280		1	RESISTOR 1K +-1% .125W TF TC=0+-100	1970	SFR25H
A4A4R9	0757-0438		1	RESISTOR 5.11K +-1% .125W TF TC=0+-100	1970	SFR25H
A4A4R10	0698-3441		1	RESISTOR 215 1% .125W TF TC=0+-100	1970	SFR25H
A4A4R11	0757-0443		1	RESISTOR 11K +-1% .125W TF TC=0+-100	1970	SFR25H
A4A4R12	0698-0082		1	RESISTOR 464 1% .125W TF TC=0+-100	1970.	SFR25H
A4A4R13	0698-3444		1	RESISTOR 316 1% .125W TF TC=0+-100	1970:	SFR25H
A4A4R14	0698-3442		1	RESISTOR 237 1% .125W TF TC=0+-100	1970:	SFR25H
A4A4R15	0757-0279		1	RESISTOR 3.16K +-1% .125W TF TC=0+-100	1970:	SFR25H
A4A4R16*	0757-0442		1	RESISTOR 10K +-1% .125W TF TC=0+-100	1970:	SFR25H
A4A4R17	0698-3156		1	RESISTOR 14.7K 1% .125W TF TC=0+-100	19701	SFR25H
A4A4R18	0698-3156		1	RESISTOR 14.7K 1% .125W TF TC=0+-100	19701	SFR25H
A4A4R19	0757-0280		1	PESISTOR 1K +-1% .125W TF TC=0+-100	19701	SFR25H
A4A4R20*	0698-3154		1	RESISTOR 4.221: 1% .125W TF TC=0+-100	19701	SFR25H
A4A4R21	0757-0290		1	RESISTOR 6.19K +-1% .125W TF TC=0+-100	19701	SFR25H
A4A4R22	0757-0290		1	RESISTOR 6.19K +-1% .125W TF TC=0+-100	19701	SFR25H
A4A4R24	3698-3431		1	RESISTOR 23.7 1% .125W TF TC=0+-100	19701	SFR25H
A4A4R25	3757-0401		1	RESISTOR 100 +-1% .125W TF TC=0+-100	19701	SFR25H
A4A4R26	0757-0280		1	RESISTOR 1K +-1% .125W TF TC=0+-100	19701	SFR25H
A4A4R27	1698-3155		1	RESISTOR 4.641: 1% .125W TF TC=0+-100	19701	SFR25H
A4A4R28	0698-0082		1	RESISTOR 464 1% .125W TF TC=0+-100	19701	SFR25H
A4A4R29	0757-0443		1	RESISTOR 11K +-1% .125W TF TC=0+-100	19701	SFR25H
A4A4R30	1757-0438		1	RESISTOR 5.11K +-1% .125W TF TC=0+-100	19701	SFR25H
A4A4R31	0698-3441		1	RESISTOR 215 1% .125W TF TC=0+-100	19701	SFR25H
A4A4R32	0698-3444		1	RESISTDR 316 1% .125W TF TC=0+-100	19701	SFR25H
A4A4R33	0698-3442		1	RESISTOR 237 1% .125W TF TC=0+-100	19701	SFR25H
A4A4R34	0757-0279		1	RESISTOR 3.16K +-1% .125W TF TC=0+-100	19701	SFR25H
A4A4R35*	0757-0418		1	RESISTOR 619 +-1% .125W TF TC=D+-100	19701	SFR25H
A4A4R37	1757-0442		1	RESISTOR 10K +-1% .125W TF TC=0+-100	19701	SFR25H
A4A4R39	0757-0280		1	RESISTOR 1K +-1% .125W TF TC=0+-100	19701	SFR25H
A4A4R40*	0698-3154		1	RESISTOR 4.221: 1% .125W TF TC=0+-100	19701	SFR25H
A4A4R41	1757-0290		1	RESISTOR 6.19K +-1% .125W TF TC=0+-100	19701	SFR25H
A4A4R42*				NORMALLY OPEN		
A4A4R43	2100-3163		1	RESISTDR-TRMR 1M 20% TKF SIDE-ADJ 17-TRN	73138	89PR1M
A4A4R44*				NORMALLY OPEN		
A4A4R45*	0757-0346		1	RESISTOR 10 +-1% .125W TF TC=0+-100	91637	CMF-55-1. T-1
A4A4R46	0757-0416		1	RESISTOR 511 +-1% .125W TF TC=0+-100	19701	SFR25H
A4A4R48	0757-0290		1	RESISTDR 6.19K +-1% .125W TF TC=0+-100	19701	SFR25H
A4A4R49	2100-3052		1	RESISTOR-TRMR 50 10% TKF SIDE-ADJ 17-TRN	73138	89PR50
A4A4R50	0757-0401		1	RESISTOR 100 +-1% .125W TF TC=0+-100	19701	SFR25H
A4A4R51	0757-0280		1	RESISTDR 1K +-1% .125W TF TC=0+-100	19701	SFR25H
A4A4R52	0698-3155		1	RESISTOR 4.64K 1% .125W TF TC=0+-100	19701	SFR25H
A4A4R53	0698-0082		1	RESISTDR 464 1% .125W TF TC=0+-100	19701	SFR25H
A4A4R54	0757-0443	0	1	RESISTOR 11K +-1% .125W TF TC=0+-100	19701	SFR25H
A4A4R55	0757-0438	3	1	RESISTDR 5.11K +-1% .125W TF TC=0+-100	19701	SFR25H
A4A4R56	0698-3441	8	1	RESISTDR 215 1% .125W TF TC=0+-100	19701	SFR25H
A4A4R57	0698-3444	1	1	RESISTDR 316 1% .125W TF TC=0+-100	19701	SFR25H
A4A4R58	0698-3442	9	1	RESISTDR 237 1% .125W TF TC=0+-100	19701	SFR25H

**Indicates factory-selected value*

HP Part Number 85662-60184

A4A4 Bandwidth Filter

Reference Designatior	HP Part Number	C D	Qty	Description	Mfr Code	Mfr Part Number
A4A4R59	0757-0279		1	RESISTOR 3.16K +-1% .125W TF TC=0+-100	1970:	SFR25H
A4A4R60*	0757-0288		1	RESISTOR 9.09K +-1% .125W TF TC=0+-100	1970:	SFR25H
A4A4R61	0698-3156		1	RESISTOR 14.7K 1% .125W TF TC=0+-100	19701	SFR25H
A4A4R62	0698-3156		1	RESISTOR 14.7K 1% .125W TF TC=0+-100	19701	SFR25H
A4A4R63	0757-0280		1	RESISTOR 1K +-1% .125W TF TC=0+-100	19701	SFR25H
A4A4R64*	0698-3154		1	RESISTOR 4.22K 1% .125W TF TC=0+-100	19701	SFR25H
A4A4R65*	0698-0083		1	RESISTOR 1.96K 1% .125W TF TC=0+-100	19701	SFR25H
A4A4R66	0757-0290		1	RESISTOR 6.19K +-1% .125W TF TC=0+-100	19701	SFR25H
A4A4R67	0757-0290		1	RESISTOR 6.19K +-1% .125W TF TC=0+-100	19701	SFR25H
A4A4R68	0757-0417		1	RESISTOR 562 +-1% .125W TF TC=0+-100	19701	SFR25H
A4A4R70	0698-3440		1	RESISTOR 196 1% .125W TF TC=0+-100	19701	SFR25H
A4A4R72	3698-3438		1	RESISTOR 147 1% .125W TF TC=0+-100	19701	SFR25H
A4A4R73	0698-0082		1	RESISTOR 464 1% .125W TF TC=0+-100	19701	SFR25H
A4A4R74	0757-0438		1	RESISTOR 5.11K +-1% .125W TF TC=0+-100	19701	SFR25H
A4A4R75	0757-0438		1	RESISTOR 5.11K +-1% .125W TF TC=0+-100	19701	SFR25H
A4A4R76	0757-0438		1	RESISTOR 5.11K +-1% .125W TF TC=0+-100	19701	SFR25H
A4A4R82	0757-0401		1	RESISTOR 100 +-1% .125W TF TC=0+-100	19701	SFR25H
A4A4R83	0757-0442		1	RESISTOR 10K +-1% .125W TF TC=0+-100	19701	SFR25H
A4A4R84	0757-0442		1	RESISTOR 10K +-1% .125W TF TC=0+-100	19701	SFR25H
A4A4R85	0757-0442		1	RESISTOR 10K +-1% .125W TF TC=0+-100	19701	SFR25H
A4A4R88	0698-3154		1	RESISTOR 4.22K 1% .125W TF TC=0+-100	19701	SFR25H
A4A4R89	3698-3154		1	RESISTOR 4.221: 1% .125W TF TC=0+-100	19701	SFR25H
A4A4R90	3698-3154		1	RESISTOR 4.221: 1% .125W TF TC=0+-100	19701	SFR25H
A4A4R91	3757-0180		1	RESISTOR 31.6 +-1% .125W TF TC=0+-100	19701	SFR25H
A4A4R92	1757-0180		1	RESISTOR 31.6 +-1% .125W TF TC=0+-100	19701	SFR25H
A4A4R93	0757-0180		1	RESISTOR 31.6 +-1% .125W TF TC=0+-100	19701	SFR25H
A4A4R94*	0757-0465		1	RESISTOR 100K +-1% .125W TF TC=0+-100	19701	SFR25H
A4A4R95	1757-0465		1	RESISTOR 100K +-1% .125W TF TC=0+-100	19701	SFR25H
A4A4R96	0757-0420		1	RESISTOR 750 +-1% .125W TF TC=0+-100	19701	SFR25H
A4A4TP1	0360-1788		1	CONNECTOR-SGL CONT PIN .045-IN-BSC-SZ SQ	04574	
A4A4TP2	1360-1788		1	CONNECTOR-SGL CONT PIN .045-IN-BSC-SZ SQ	04574	
A4A4TP3	.251-0600		1	CONNECTOR-SGL CDNT PIN 1.14-MM-BSC-SZ SQ	27264	16-06-0034
A4A4TP4	1360-1788		1	:ONNECTDR-SGL CONT PIN .045-IN-BSC-SZ SQ	04574	
A4A4TP5	1360-1788		1	:DNNECTDR-SGL CONT PIN .045-IN-BSC-SZ SQ	04574	
A4A4TP6	1360-1788		1	CONNECTOR-SGL CONT PIN .045-IN-BSC-SZ SQ	04574	
A4A4TP7	0360-1788		1	CONNECTOR-SGL CDNT PIN .045-IN-BSC-SZ SQ	04574	
A4A4TP8	1251-0600		1	CONNECTOR-SGL CONT PIN 1.14-MM-BSC-SZ SQ	27264	16-06-0034
A4A4VR1	1902-0048		1	DIODE-ZNR 6.81V 5% DO-35 PD=.4W	04713	
A4A4Y1	0410-1029		1	CRYSTAL, QUARTZ, PART OF A MATCHED SET OF SIX, INCLUDES A4A4Y1-3, A4A6A1Y1, AND A4A8Y1-2		
A4A4Y2				CRYSTAL, QUARTZ, PART OF A MATCHED SET OF SIX, INCLUDES A4A4Y1-3, A4A6A1Y1, AND A4A8Y1-2 (REFER TO A4A4Y1)		
A4A4Y3				CRYSTAL, QUARTZ, PART OF A MATCHED SET OF SIX, INCLUDES A4A4Y1-3, A4A6A1Y1, AND A4A8Y1-2 (REFER TO A4A4Y1)		

**Indicates facto y-selected value*

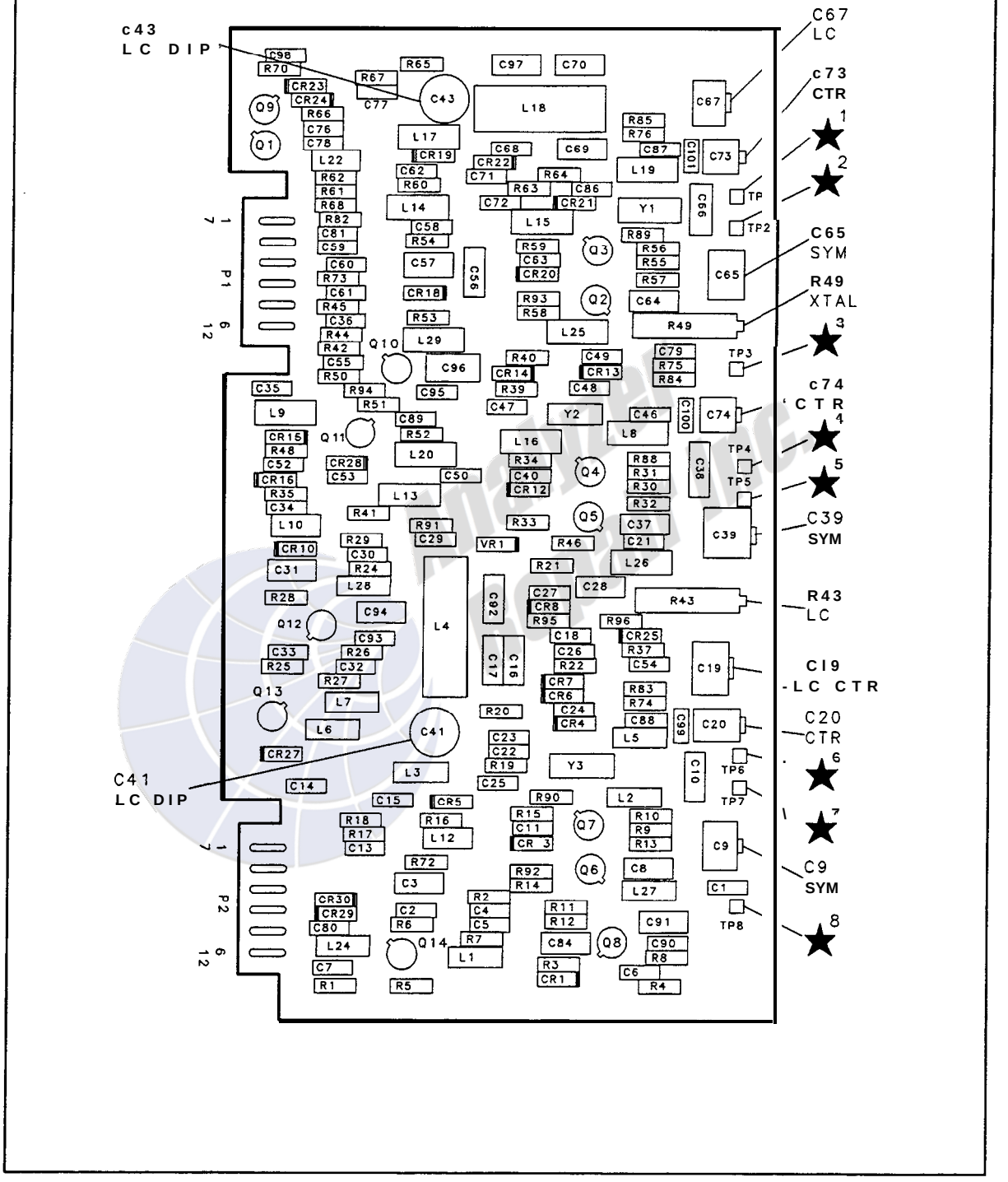

A4A4 Bandwidth Filter Component Locations, 85662-60184

(Option 462 Tab)

A4A4 BANDWIDTH FILTER
85662-60184 (OPTION 462)
(SERIAL PREFIXES: 2542A)

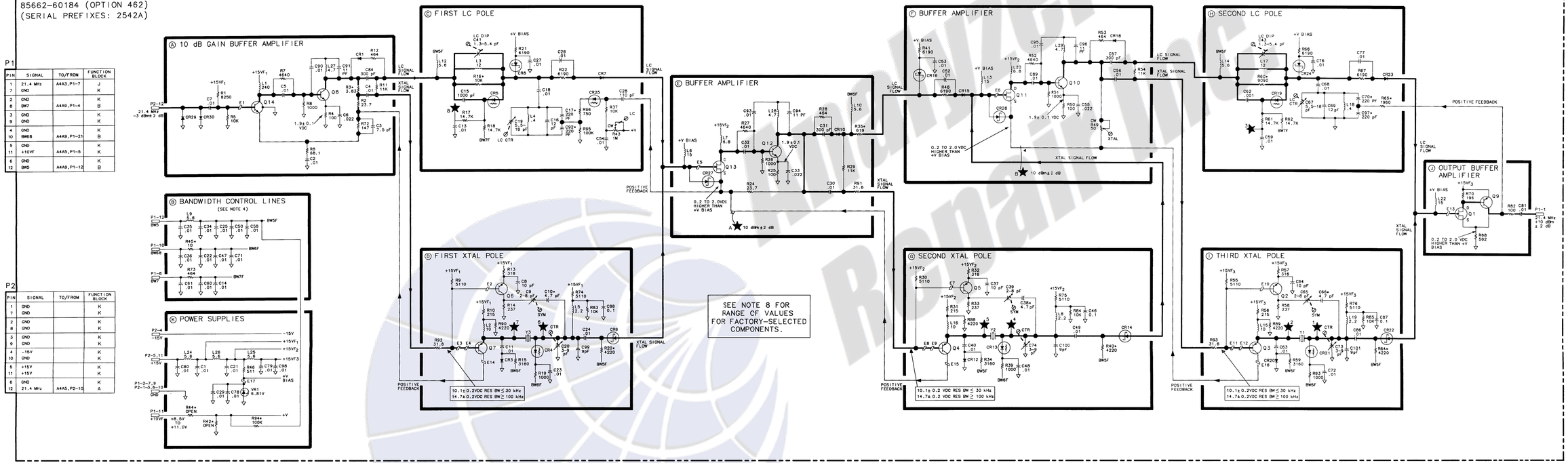

P1

PIN	SIGNAL	TO/FROM	FUNCTION BLOCK
1	21.4 MHz	A4A3,P1-7	J
7	GND		K
2	GND		K
8	BW7	A4A9,P1-4	B
3	GND		K
9	GND		K
4	GND		K
10	BW8B	A4A9,P1-21	B
5	GND		K
11	+10VF	A4A5,P1-5	K
6	GND		K
12	BW5	A4A9,P1-12	K B

P2

PIN	SIGNAL	TO/FROM	FUNCTION BLOCK
1	GND		K
7	GND		K
2	GND		K
8	GND		K
3	GND		K
9	GND		K
4	−15V		K
10	GND		K
5	+15V		K
11	+15V		K
6	GND		K
12	21.4 MHz	A4A5,P2-10	K A

NOTES:

1. REFERENCE DESIGNATORS WITHIN THIS ASSEMBLY ARE ABBREVIATED. FOR COMPLETE REFERENCE DESIGNATION, PREFIX ABBREVIATION WITH ASSEMBLY DESIGNATION.
2. UNLESS OTHERWISE INDICATED: RESISTANCE IS IN OHMS (Ω) CAPACITANCE IS IN MICROFARADS(μF) INDUCTANCE IS IN MICROHENRIES(μH)
3. ASTERISK (*) DENOTES A FACTORY SELECTED COMPONENT; TYPICAL VALUE IS SHOWN. REFER TO NOTE 8 FOR RANGE OF VALUES.
4. MNEMONIC TABLE:

MNEMONIC	DESCRIPTION
BW5	BANDWIDTH 5
BW7	BANDWIDTH 7 (LC MODE)
BW8B	BANDWIDTH 8B (XTAL MODE)

5. UNLESS OTHERWISE NOTED, INSTRUMENT SETTINGS ARE AS FOLLOWS:

INSTRUMENT PRESET	
CENTER FREQUENCY	CAL. OUT FREQ
FREQUENCY SPAN	0 Hz
ATTENUATION	0 dB
RESOLUTION BANDWIDTH	3 kHz

6. TABLE OF RESOLUTION BANDWIDTH CONTROL LINE VOLTAGES

RESOLUTION BANDWIDTH	TYPICAL VALUES		
	BW5	BW8B	BW7
3 MHz	+14.8	−14.0	+13.7
1 MHz	+14.8	−14.0	+13.1
300 kHz	+14.8	−14.0	+14.1
100 kHz	+14.8	−14.0	+14.5
30 kHz	−.6	+14.3	+14.3
10 kHz	−.6	+9.3	+14.3
3 kHz	−.6	+9.0	+14.3
1 kHz AND NARROWER	−.6	+9.2	+14.3

7. UNLESS OTHERWISE INDICATED: SIGNALS ENTER AT LEFT SIDE AND EXIT AT RIGHT SIDE OF FUNCTION BLOCKS.
8. THE COMPONENTS LISTED BELOW ARE FACTORY-SELECTED COMPONENTS. THE RANGE OF ACCEPTABLE VALUES FOR EACH FACTORY-SELECTED COMPONENT IS ALSO LISTED.

COMPONENT	ACCEPTABLE VALUES
C10*	1.0pF − 8.2pF
C17*	1.0pF − 8.2pF
C35*	1.0pF − 8.2pF
C66*	1.0pF − 8.2pF
C7D*	180pF − 270pF
C97*	180pF − 270pF
C97*	180pF − 270pF
R16*	5.62KΩ − 14.7KΩ
R20*	3.16KΩ − 6.19KΩ
R35*	383Ω − 825Ω
R40*	3.16KΩ − 6.19KΩ
R42*	1KΩ − OPEN
R44*	1KΩ − OPEN
R45*	0Ω − 100Ω
R60*	5.11KΩ − 43.3KΩ
R64*	3.16KΩ − 43.3KΩ
R65*	909Ω − 2.32KΩ
R84*	100KΩ − 1MΩ

HP Part Number 85662-60186

A4A7 3 MHz Bandwidth Filter

Reference Designation	HP Part Number	CD	Qty	Description	Mfr Code	Mfr Part Number
A4A7	85662-60186	3	1	BOARD ASSEMBLY, 3 MHZ BANDWIDTH FILTER (OPTION 462)	28480	85662-60186
A4A7C1	0160-2055	9	1	CAPACITOR-FXD .01UF +80-20% 100VDC CER		805-504 Y5V 103Z
A4A7C2	0160-2266	4	1	CAPACITOR-FXO 24PF +-5% 500VDC CER O+-30	52763	2RDPLX05024RNPO
A4A7C3	0160-2055	9	1	CAPACITOR-FXD .01UF +80-20% 100VDC CER		805-504 Y5V 103Z
A4A7C4	0160-2250	6	1	CAP-FXD 5.1pF 500 V	52763	
A4A7C5*	0160-4611	7	1	CAPACITOR-FXD 68PF +-1% 300VDC MICA -20/	09023	CD15ED680F03
A4A7C6	0121-0446	6	1	CAP-VAR 4.5pF 2pF 160 V	52763	302-450-502
A4A7C7	0121-0105	4	1	CAPACITOR-V TRMR-CER 9-35PF 200V PC-MTG	52763	304-324-573
A4A7C8	0160-2055	9	1	CAPACITOR-FXD .01UF +80-20% 100VDC CER		805-504 Y5V 103Z
A4A7C9	0160-2055	9	1	CAPACITOR-FXD .01UF +80-20% 100VDC CER		805-504 Y5V 103Z
A4A7C10	0160-2055	9	1	CAPACITOR-FXD .01UF +80-20% 100VDC CER		805-504 Y5V 103Z
A4A7C11	0160-2250	6	1	CAP-FXO 5.1pF 500 V	52763	
A4A7C12*	0160-4611	7	1	CAPACITOR-FXD 68PF +-1% 300VDC MICA -20/	09023	CD15ED680F03
A4A7C13	0121-0493	3	1	CAPACITOR-V TRMR-AIR 1.7-11PF 175V PC-MT	74970	187-0306-125
A4A7C14	0121-0446	6	1	CAP-VAR 4.5pF 2pF 160 V	52763	302-450-502
A4A7C15	0121-0105	4	1	CAPACITOR-V TRMR-CER 9-35PF 200V PC-MTG	52763	304-324-573
A4A7C16	0160-2055	9	1	CAPACITOR-FXD .01UF +80-20% 100VDC CER		805-504 Y5V 103Z
A4A7C17	0160-2055	9	1	CAPACITOR-FXD .01UF +80-20% 100VDC CER		805-504 Y5V 103Z
A4A7C18	0160-2250	6	1	CAP-FXD 5.1pF 500 V	52763	
A4A7C19	0160-2250	6	1	CAP-FXD 5.1pF 500 V	52763	
A4A7C20	0160-2055	9	1	CAPACITOR-FXD .01UF +80-20% 100VDC CER		805-504 Y5V 103Z
A4A7C21*	0160-4611	7	1	CAPACITOR-FXD 68PF +-1% 300VDC MICA -20/	09023	CD15ED680F03
A4A7C22	0121-0493	3	1	CAPACITOR-V TRMR-AIR 1.7-11PF 175V PC-MT	74970	187-0306-125
A4A7C23	0121-0446	6	1	CAP-VAR 4.5pF 2pF 160 V	52763	302-450-502
A4A7C24	0121-0105	4	1	CAPACITOR-V TRMR-CER 9-35PF 200V PC-MTG	52763	304-324-573
A4A7C25	0160-2055	9	1	CAPACITOR-FXD .01UF +80-20% 100VDC CER		805-504 Y5V 103Z
A4A7C26	0160-2055	9	1	CAPACITOR-FXD .01UF +80-20% 100VDC CER		805-504 Y5V 103Z
A4A7C27	0160-2250	6	1	CAP-FXD 5.1pF 500 V	52763	
A4A7C28	0160-2055	9	1	CAPACITOR-FXD .01UF +80-20% 100VDC CER		805-504 Y5V 103Z
A4A7C29	0160-2250	6	1	CAP-FXD 5.1pF 500 V	52763	
A4A7C30*	0160-4611	7	1	CAPACITOR-FXD 68PF +-1% 300VDC MICA -20/	09023	CD15ED680F03
A4A7C31	0121-0493	3	1	CAPACITOR-V TRMR-AIR 1.7-11PF 175V PC-MT	74970	187-0306-125
A4A7C32	0121-0446	6	1	CAP-VAR 4.5pF 2pF 160 V	52763	302-450-502
A4A7C33	0121-0105	4	1	CAPACITOR-V TRMR-CER 9-35PF 200V PC-MTG	52763	304-324-573
A4A7C34	0160-2055	9	1	CAPACITDR-FXD .01UF +80-20% 100VDC CER		805-504 Y5V 103Z
A4A7C35	0160-2055	9	1	CAPACITOR-FXD .01UF +80-20% 100VDC CER		805-504 Y5V 103Z
A4A7C36	0160-2250	6	1	CAP-FXO 5.1pF 500 V	52763	
A4A7C37	0160-2055	9	1	CAPACITOR-FXD .01UF +80-20% 100VDC CER		805-504 Y5V 1032
A4A7C38	0160-2250	6	1	CAP-FXD 5.1pF 500 V	52763	
A4A7C39*	0160-4611	7	1	CAPACITOR-FXD 68PF +-1% 300VDC MICA -20/	09023	CD15ED680F03
A4A7C40	0121-0493	3	1	CAPACITOR-V TRMR-AIR 1.7-11PF 175V PC-MT	74970	187-0306-125
A4A7C41	0121-0446	6	1	CAP-VAR 4.5pF 2pF 160 V	52763	302-450-502
A4A7C42	0121-0105	4	1	CAPACITOR-V TRMR-CER 9-35PF 200V PC-MTG	52763	304-324-573
A4A7C43	0160-2055	9	1	CAPACITOR-FXD .01UF +80-20% 100VDC CER		805-504 Y5V 103Z
A4A7C44	0160-2244	8	1	CAP-FXD 3pF 500 V	52763	
A4A7C45	0160-2055	9	1	CAPACITOR-FXD .01UF +80-20% 100VDC CER		805-504 Y5V 103Z

**Indicates factory-selected value*

HP Part Number 85662-60186

A4A7 3 MHz Bandwidth Filter

Reference Designation	HP Part Number	CD	Qty	Description	Mfr Code	Mfr Part Number
A4A7C46	0160-2055		1	CAPACITOR-FXD .01UF +80-20% 100VDC CER		805-504 Y5V 103Z
A4A7C47	(1160-2244		1	CAP-FXD 3pF 500 V	5276:	
A4A7C48	0160-4300		1	CAPACITOR-FXD .047UF +80-20% 100VDC CER		562CZC101AL473ZA26
A4A7C49	0180-0197		1	CAPACITOR-FXD 2.2UF+-10% 20VDC TA	5628S	150D225X9020A2-DYS
A4A7C50	0180-0197		1	CAPACITOR-FXD 2.2UF+-10% 20VDC TA	5628S	150D225X9020A2-DYS
A4A7C51	0180-0197		1	CAPACITOR-FXD 2.2UF+-10% 20VDC TA	5628S	150D225X9020A2-DYS
A4A7C52	0180-0197		1	CAPACITOR-FXD 2.2UF+-10% 20VDC TA	5628S	150D225X9020A2-DYS
A4A7C53	C1180-0197		1	CAPACITOR-FXD 2.2UF+-10% 20VDC TA	56289	150D225X9020A2-DYS
A4A7C54	0180-0197		1	CAPACITOR-FXD 2.2UF+-10% 20VDC TA	56289	150D225X9020A2-DYS
A4A7C55	0160-2055		1	CAPACITOR-FXD .01UF +80-20% 100VDC CER		805-504 Y5V 103Z
A4A7C56	0160-2055		1	CAPACITOR-FXD .01UF +80-20% 100VDC CER		805-504 Y5V 103Z
A4A7C57	0160-4300		1	CAPACITOR-FXD .047UF +80-20% 100VDC CER		562CZC101AL473ZA26
A4A7C58	a160-4297		1	CAPACITOR-FXD .022UF +80-20% 100VDC CER		562CZC101AH223ZA23
A4A7C59	0160-2055		1	CAPACITOR-FXD .01UF +80-20% 100VDC CER		805-504 Y5V 103Z
A4A7C60	0160-2055		1	CAPACITOR-FXD .01UF +80-20% 100VDC CER		805-504 Y5V 103Z
A4A7C61	0160-2055		1	CAPACITOR-FXD .01UF +80-20% 100VDC CER		805-504 Y5V 103Z
A4A7C62	0160-2055		1	CAPACITOR-FXD .01UF +80-20% 100VDC CER		805-504 Y5V 103Z
A4A7C63	0160-4300		1	CAPACITOR-FXD .047UF +80-20% 100VDC CER		562CZC101AL473ZA26
A4A7C64	0160-4297		1	"APACITDR-FXD .022UF +80-20% 100VDC CER		562CZC101AH223ZA23
A4A7C65	0160-2055		1	CAPACITOR-FXD .01UF +80-20% 100VDC CER		805-504 Y5V 103Z
A4A7C66	0160-2055		1	CAPACITOR-FXD .01UF +80-20% 100VDC CER		805-504 Y5V 103Z
A4A7C67	0160-2055		1	CAPACITOR-FXD .01UF +80-20% 100VDC CER		805-504 Y5V 103Z
A4A7C68	0160-2055		1	CAPACITOR-FXD .01UF +80-20% 100VDC CER		805-504 Y5V 103Z
A4A7C69	0160-4300		1	CAPACITOR-FXD .047UF +80-20% 100VDC CER		562CZC101AL473ZA26
A4A7C70	0160-4297		1	:APACITDR-FXD .022UF +80-20% 100VDC CER		562CZC101AH223ZA23
A4A7C71	0160-2055		1	CAPACITOR-FXD .01UF +80-20% 100VDC CER		805-504 Y5V 103Z
A4A7C72	0160-2055		1	:APACITDR-FXD .01UF +80-20% 100VDC CER		805-504 Y5V 103Z
A4A7C73	0160-2055		1	CAPACITOR-FXD .01UF +80-20% 100VDC CER		805-504 Y5V 103Z
A4A7C74	0160-2055		1	CAPACITOR-FXD .01UF +80-20% 100VDC CER		805-504 Y5V 103Z
A4A7C75	0160-4300		1	CAPACITOR-FXD .047UF +80-20% 100VDC CER		562CZC101AL473ZA26
A4A7C76	0160-4297		1	CAPACITOR-FXD .022UF +80-20% 100VDC CER		562CZC101AH223ZA23
A4A7C77	0160-2055		1	CAPACITOR-FXD .01UF +80-20% 100VDC CER		805-504 Y5V 103Z
A4A7C78	0160-2055		1	CAPACITOR-FXD .01UF +80-20% 100VDC CER		805-504 Y5V 103Z
A4A7C79	0160-2055		1	CAPACITOR-FXD .01UF +80-20% 100VDC CER		805-504 Y5V 103Z
A4A7C80	0160-2055		1	CAPACITOR-FXD .01UF +80-20% 100VDC CER		805-504 Y5V 103Z
A4A7C81	0160-4300		1	CAPACITOR-FXD .047UF +80-20% 100VDC CER		562CZC101AL473ZA26
A4A7C82	0160-4297		1	CAPACITOR-FXD .022UF +80-20% 100VDC CER		562CZC101AH223ZA23
A4A7C83	0160-2055		1	:APACITDR-FXD .01UF +80-20% 100VDC CER		805-504 Y5V 103Z
A4A7C84	0160-2055		1	:APACITDR-FXD .01UF +80-20% 100VDC CER		805-504 Y5V 103Z
A4A7C85	0160-4300		1	CAPACITOR-FXD .047UF +80-20% 100VDC CER		562CZC101AL473ZA26
A4A7C86	0160-4300		1	:APACITDR-FXD .047UF +80-20% 100VDC CER		562CZC101AL473ZA26
A4A7C87	0160-4300		1	CAPACITOR-FXD .047UF +80-20% 100VDC CER		562CZC101AL473ZA26
A4A7C88	01160-4300		1	.APACITDR-FXD .047UF +80-20% 100VDC CER		562CZC101AL473ZA26
A4A7C89	01160-4300		1	CAPACITOR-FXD .047UF +80-20% 100VDC CER		562CZC101AL473ZA26
A4A7C90	01160-4300		1	CAPACITOR-FXD .047UF +80-20% 100VDC CER		562CZC101AL473ZA26
A4A7C91	01160-4300		1	APACITOR-FXD .047UF +80-20% 100VDC CER		562CZC101AL473ZA26
A4A7C92	01160-4300		1	APACITDR-FXD .047UF +80-20% 100VDC CER		562CZC101AL473ZA26
A4A7C93*	01160-2252		1	AP-FXD 6.2pF 500 V	52763	

**Indicates factory-selected value*

HP Part Number 85662-60186

A4A7 3 MHz Bandwidth Filter

Reference Designation	HP Part Number	C D	Qty	Description	Mfr Code	Mfr Part Number
A4A7CR1	1901-0040	1	1	DIODE-SWITCHING 30V 50MA 2NS DO-35	71468	
A4A7CR2	1901-0040	1	1	DIODE-SWITCHING 30V 50MA 2NS DO-35	71468	
A4A7CR3	1901-0040	1	1	DIODE-SWITCHING 30V 50MA 2NS DO-35	71468	
A4A7CR4	1901-0040	1	1	DIODE-SWITCHING 30V 50MA 2NS DO-35	71468	
A4A7CR5	1901-0040	1	1	DIODE-SWITCHING 30V 50MA 2NS DO-35	71468	
A4A7CR6	1901-0040	1	1	DIODE-SWITCHING 30V 50MA 2NS DO-35	71468	
A4A7CR7	1901-0040	1	1	DIODE-SWITCHING 30V 50MA 2NS DO-35	71468	
A4A7CR8	1901-0040	1	1	DIODE-SWITCHING 30V 50MA 2NS DO-35	7146E	
A4A7CR9	1901-0040	1	1	DIODE-SWITCHING 30V 50MA 2NS DO-35	7146E	
A4A7CR10	1901-0040	1	1	DIODE-SWITCHING 30V 50MA 2NS DO-35	7146E	
A4A7CR11	1901-0040	1	1	DIODE-SWITCHING 30V 50MA 2NS DO-35	71468	
A4A7CR12	1901-0040	1	1	DIODE-SWITCHING 30V 50MA 2NS DO-35	71468	
A4A7CR13	1901-0040	1	1	DIODE-SWITCHING 30V 50MA 2NS DO-35	71468	
A4A7CR14	1901-0040	1	1	DIODE-SWITCHING 30V 50MA 2NS DO-35	71468	
A4A7CR15	1901-0040	1	1	DIODE-SWITCHING 30V 50MA 2NS DO-35	71468	
A4A7CR16	1901-0040	1	1	DIODE-SWITCHING 30V 50MA 2NS DO-35	71468	
A4A7CR17	1901-0040	1	1	DIODE-SWITCHING 30V 50MA 2NS DO-35	71468	
A4A7CR18	1901-0040	1	1	DIODE-SWITCHING 30V 50MA 2NS DO-35	71468	
A4A7CR19	1901-0040	1	1	DIODE-SWITCHING 30V 50MA 2NS DO-35	71468	
A4A7CR20	1901-0040	1	1	DIODE-SWITCHING 30V 50MA 2NS DO-35	71468	
A4A7CR21	1901-0040	1	1	DIODE-SWITCHING 30V 50MA 2NS DO-35	71468	
A4A7CR22	1901-0040	1	1	DIODE-SWITCHING 30V 50MA 2NS DO-35	71468	
A4A7CR23	1901-0040	1	1	DIODE-SWITCHING 30V 50MA 2NS DO-35	71468	
A4A7CR24	1901-0040	1	1	DIODE-SWITCHING 30V 50MA 2NS DO-35	71468	
A4A7CR25	1901-0040	1	1	DIODE-SWITCHING 30V 50MA 2NS DO-35	71468	
A4A7CR26	1901-0040	1	1	DIODE-SWITCHING 30V 50MA 2NS DO-35	71468	
A4A7CR27	1901-0040	1	1	DIODE-SWITCHING 30V 50MA 2NS DO-35	71468	
A4A7CR28	1901-0040	1	1	DIODE-SWITCHING 30V 50MA 2NS DO-35	71468	
A4A7CR29	1901-0040	1	1	DIODE-SWITCHING 30V 50MA 2NS DO-35	71468	
A4A7CR30	1901-0040	1	1	DIODE-SWITCHING 30V 50MA 2NS DO-35	71468	
A4A7E1	9170-0029	3	1	CORE-SHIELDING BEAD	02114	56-590-65A2/4A
A4A7E2	9170-0029	3	1	CORE-SHIELDING BEAD	02114	56-590-65A2/4A
A4A7E3	9170-0029	3	1	CORE-SHIELDING BEAD	02114	56-590-65A2/4A
A4A7E4	9170-0029	3	1	CORE-SHIELDING BEAD	02114	56-590-65A2/4A
A4A7E5	9170-0029	3	1	CORE-SHIELDING BEAD	02114	56-590-65A2/4A
A4A7E6	9170-0029	3	1	CORE-SHIELDING BEAD	02114	56-590-65A2/4A
A4A7E7	9170-0029	3	1	CORE-SHIELDING BEAD	02114	56-590-65A2/4A
A4A7E8	9170-0029	3	1	CORE-SHIELDING BEAD	02114	56-590-65A2/4A
A4A7E9	9170-0029	3	1	CORE-SHIELDING BEAD	02114	56-590-65A2/4A
A4A7E10	9170-0029	3	1	CORE-SHIELDING BEAD	02114	56-590-65A2/4A
A4A7E11	9170-0029	3	1	CORE-SHIELDING BEAD	02114	56-590-65A2/4A
A4A7E12	9170-0029	3	1	CORE-SHIELDING BEAD	02114	56-590-65A2/4A
A4A7E13	9170-0029	3	1	CORE-SHIELDING BEAD	02114	56-590-65A2/4A
A4A7E14	9170-0029	3	1	CORE-SHIELDING BEAD	02114	56-590-65A2/4A
A4A7E15	9170-0029	3	1	CORE-SHIELDING BEAD	02114	56-590-65A2/4A
A4A7E16	9170-0029	3	1	CORE-SHIELDING BEAD	02114	56-590-65A2/4A
A4A7E17	9170-0029	3	1	CORE-SHIELDING BEAD	02114	56-590-65A2/4A

**Indicates factory-selected value*

HP Part Number 85662-60186

A4A7 3 MHz Bandwidth Filter

Reference Designatior	HP Part Number	C D	Qty	Description	Mfr Code	Mfr Part Number
A4A7E18	9170-0029		1	CORE-SHIELDING BEAD	0211[illegible]	56-590-65A2/4A
A4A7E19	9170-0029		1	CORE-SHIELDING BEAD	0211[illegible]	56-590-65A2/4A
A4A7E20	9170-0029		1	CORE-SHIELDING BEAD	0211[illegible]	56-590-65A2/4A
A4A7E21	9170-0029		1	CORE-SHIELDING BEAD	02114	56-590-65A2/4A
A4A7E22	9170-0029		1	CORE-SHIELDING BEAD	02114	56-590-65A2/4A
A4A7L1	9100-1643		1	INDUCTOR RF-CH-MLD 300UH +-5% .2D-INX.4[illegible]	9980C	2500-02
A4A7L2	9100-1648		1	INDUCTOR RF-CH-MLD 560UH +-5% .2D-INX.4[illegible]	9980C	2500-16
A4A7L3	9100-1629		1	INDUCTOR RF-CH-MLD 47UH +-5% .166D-INX.[illegible]	9980C	1537-60
A4A7L4	9100-1643		1	INDUCTOR RF-CH-MLD 300UH +-5% .2D-INX.4[illegible]	9980C	2500-02
A4A7L5	9100-1648		1	INDUCTOR RF-CH-MLD 560UH +-5% .2D-INX.4[illegible]	99800	2500-16
A4A7L6	9100-1629		1	INDUCTOR RF-CH-MLD 47UH +-5% .166D-INX.[illegible]	99800	1537-60
A4A7L7	9100-1643		1	INDUCTOR RF-CH-MLD 300UH +-5% .2D-INX.4[illegible]	99800	2500-02
A4A7L8	9100-1648		1	INDUCTOR RF-CH-MLD 560UH +-5% .2D-INX.4[illegible]	99800	2500-16
A4A7L9	9100-1629		1	INDUCTOR RF-CH-MLD 47UH +-5% .166D-INX.3	99800	1537-60
A4A7L10	9100-1643		1	INDUCTOR RF-CH-MLD 300UH +-5% .2D-INX.45	99800	2500-02
A4A7L11	9100-1648		1	INDUCTOR RF-CH-MLD 560UH +-5% .2D-INX.45	99800	2500-16
A4A7L12	9100-1629		1	INDUCTOR RF-CH-MLD 47UH +-5% .166D-INX.3	99800	1537-60
A4A7L13	9100-1643		1	INDUCTOR RF-CH-MLD 300UH +-5% .2D-INX.45	99800	2500-02
A4A7L14	9100-1648		1	INDUCTOR RF-CH-MLD 560UH +-5% .2D-INX.45	99800	2500-16
A4A7L15	9100-1629		1	INDUCTOR RF-CH-MLD 47UH +-5% .166D-INX.3	99800	1537-60
A4A7L16	9100-1643		1	INDUCTOR RF-CH-MLD 300UH +-5% .2D-INX.45	99800	2500-02
A4A7L17	3140-0114		1	INDUCTOR RF-CH-MLD 10UH +-10% .166D-INX.	99800	1537-36
A4A7L18	3140-0114		1	INDUCTOR RF-CH-MLD 10UH +-10% .166D-INX.	99800	1537-36
A4A7L19	3140-0114		1	INDUCTOR RF-CH-MLD 10UH +-10% .166D-INX.	99800	1537-36
A4A7L20	3140-0114		1	INDUCTOR RF-CH-MLD 10UH +-10% .166D-INX.	99800	1537-36
A4A7L21	3140-0114		1	INDUCTOR RF-CH-MLD 10UH +-10% .166D-INX.	99800	1537-36
A4A7L22	3140-0114		1	INDUCTOR RF-CH-MLD 10UH +-10% .166D-INX.	99800	1537-36
A4A7MP1	3960-0069		1	LUG-HOLE CNCL-HD FOR .125-D-HOLE NYL	02768	207-080501-00-0101
A4A7MP2				NOT ASSIGNED		
A4A7MP3	3960-0069		1	LUG-HOLE CNCL-HD FOR .125-D-HOLE NYL	02768	207-080501-00-0101
A4A7MP4	3960-0069		1	LUG-HOLE CNCL-HD FOR .125-D-HOLE NYL	02768	207-080501-00-0101
A4A7MP5	3960-0069		1	LUG-HOLE CNCL-HD FOR .125-D-HOLE NYL	02768	207-080501-00-0101
A4A7Q1	1853-0034		1	TRANSISTOR PNP SI TO-18 PD=360MW	04713	
A4A7Q2	1855-0081		1	TRANSISTOR J-FET N-CHAN D-MODE SI	34677	
A4A7Q3	1854-0882		1	TRANSISTOR NPN PD=300MW FT=200MHZ	56289	
A4A7Q4	1854-0023		1	TRANSISTOR NPN SI TO-18 PD=360MW	25403	
A4A7Q5	1853-0034		1	TRANSISTOR PNP SI TO-1a PD=360MW	04713	
A4A7Q6	1855-0081		1	TRANSISTOR J-FET N-CHAN D-MODE SI	34677	
A4A7Q7	1854-0882		1	TRANSISTOR NPN PD=300MW FT=200MHZ	56289	
A4A7Q8	1854-0023		1	TRANSISTOR NPN SI TO-18 PD=360MW	25403	
A4A7Q9	1853-0034		1	TRANSISTOR PNP SI TO-18 PD=360MW	04713	
A4A7Q10	1855-0081		1	TRANSISTOR J-FET N-CHAN D-MODE SI	34677	
A4A7Q11	1854-0882		1	TRANSISTOR NPN PD=300MW FT=200MHZ	56289	
A4A7Q12	1854-0023		1	TRANSISTOR NPN SI TO-18 PD=360MW	25403	
A4A7Q13	1853-0034		1	TRANSISTOR PNP SI TO-18 PD=360MW	04713	
A4A7Q14	1855-0081		1	TRANSISTOR J-FET N-CHAN D-MODE SI	34677	
A4A7Q15	1854-0882		1	TRANSISTOR NPN PD=300MW FT=200MHZ	56289	
A4A7Q16	1854-0023		1	TRANSISTOR NPN SI TO-18 PD=360MW	25403	

**Indicates factory-selected value*

HP Part Number 85662-60186

A4A7 3 MHz Bandwidth Filter

Reference Designation	HP Part Number	C D	Qty	Description	Mfr Code	Mfr Part Number
A4A7Q17	1853-0034	(	1	TRANSISTOR PNP SI TO-18 PD=360MW	04713	
A4A7Q18	1855-0081	I	1	TRANSISTOR J-FET N-CHAN D-MODE SI	34677	
A4A7Q19	1854-0023	9	1	TRANSISTOR NPN SI TO-la PD=360MW	25403	
A4A7Q20	1854-0882	8	1	TRANSISTOR NPN PD=300MW FT=200MHZ	56289	
A4A7Q21	1853-0034	(	1	TRANSISTOR PNP SI TO-18 PD=360MW	04713	
A4A7Q22	1854-0345	8	1	TRANSISTOR NPN 215179 SI TO-72 PD=200MW	04713	2N5179
A4A7R1	0757-0441	8	1	RESISTOR 8.25K +-1% .125W TF TC=0+-100	19701	SFR25H
A4A7R2	0757-0442	9	1	RESISTOR 10K +-1% .125W TF TC=0+-100	19701	SFR25H
A4A7R3	0757-0346	2	1	RESISTOR 10 +-1% .125W TF TC=0+-100	91637	CMF-55-1, T-l
A4A7R4	0757-0401	C	1	RESISTOR 100 +-1% .125W TF TC=0+-100	19701	SFR25H
A4A7R5	0757-0394	C	1	RESISTOR 51.1 +-1% .125W TF TC=0+-100	19701	SFR25H
A4A7R6	0698-3154	C	1	RESISTOR 4.221: 1% .125W TF TC=0+-100	19701	SFR25H
A4A7R7	0757-0280	3	1	RESISTOR 1K +-1% .125W TF TC=0+-100	19701	SFR25H
A4A7R8	0757-0346	2	1	RESISTOR 10 +-1% .125W TF TC=0+-100	91637	CMF-55-1, T-l
A4A7R9	0757-0397	3	1	RESISTOR 68.1 +-1% .125W TF TC=0+-100	19701	SFR25H
A4A7R10	0698-3447	4	1	RESISTOR 422 1% .125W TF TC=0+-100	19701	SFR25H
A4A7R11	0757-0420	3	1	RESISTOR 750 +-1% .125W TF TC=0+-100	19701	SFR25H
A4A7R12*	0757-0439	4	1	RESISTOR 6.81K +-1% .125W TF TC=0+-100	19701	SFR25H
A4A7R13*	0757-0439	4	1	RESISTOR 6.81K +-1% .125W TF TC=0+-100	19701	SFR25H
A4A7R14	0757-0401	C	1	RESISTOR 100 +-1% .125W TF TC=0+-100	19701	SFR25H
A4A7R15	0757-0405	4	1	RESISTOR 162 +-1% .125W TF TC=0+-100	19701	SFR25H
A4A7R16	0757-0394	C	1	RESISTOR 51.1 +-1% .125W TF TC=0+-100	19701	SFR25H
A4A7R17	0698-3154	C	1	RESISTOR 4.22K 1% .125W TF TC=0+-100	19701	SFR25H
A4A7R18	0757-0280	3	1	RESISTOR 1K +-1% .125W TF TC=0+-100	19701	SFR25H
A4A7R19	0757-0346	2	1	RESISTOR 10 +-1% .125W TF TC=0+-100	91637	CMF-55-1, T-l
A4A7R20	0757-0401	C	1	RESISTOR 100 +-1% .125W TF TC=0+-100	19701	SFR25H
A4A7R21	0698-3447	4	1	RESISTOR 422 1% .125W TF TC=0+-100	19701	SFR25H
A4A7R22	0757-0420	3	1	RESISTOR 750 +-1% .125W TF TC=0+-100	19701	SFR25H
A4A7R23*	0757-0439	4	1	RESISTOR 6.81K +-1% .125W TF TC=0+-100	19701	SFR25H
A4A7R24*	0757-0439	4	1	RESISTOR 6.81K +-1% .125W TF TC=0+-100	19701	SFR25H
A4A7R25	0757-0416	7	1	RESISTOR 511 +-1% .125W TF TC=0+-100	19701	SFR25H
A4A7R26	1757-0405	4	1	RESISTOR 162 +-1% .125W TF TC=0+-100	19701	SFR25H
A4A7R27	1757-0394	3	1	RESISTOR 51.1 +-1% .125W TF TC=0+-100	19701	SFR25H
A4A7R28	0698-3154	3	1	RESISTOR 4.22K 1% .125W TF TC=0+-100	19701	SFR25H
A4A7R29	0757-0280	3	1	RESISTOR 1K +-1% .125W TF TC=0+-100	19701	SFR25H
A4A7R30	1100-3426	5	1	RESISTOR-TRMR 20 10% TKF SIDE-ADJ l-TRN	32997	3386X-146-200
A4A7R31	1757-0401	3	1	RESISTOR 100 +-1% .125W TF TC=0+-100	19701	SFR25H
A4A7R32	1698-3447	4	1	RESISTOR 422 1% .125W TF TC=0+-100	19701	SFR25H
A4A7R33	1757-0420	3	1	RESISTOR 750 +-1% .125W TF TC=0+-100	19701	SFR25H
A4A7R34*	0757-0439	4	1	RESISTOR 6.81K +-1% .125W TF TC=0+-100	19701	SFR25H
A4A7R35*	0757-0439	4	1	RESISTOR 6.81K +-1% .125W TF TC=0+-100	19701	SFR25H
A4A7R36	0757-0416	7	1	RESISTOR 511 +-1% .125W TF TC=0+-100	19701	SFR25H
A4A7R37	0757-0405	4	1	RESISTOR 162 +-1% .125W TF TC=0+-100	19701	SFR25H
A4A7R38	1757-0394	3	1	RESISTOR 51.1 +-1% .125W TF TC=0+-100	19701	SFR25H
A4A7R39	1698-3154	3	1	RESISTOR 4.22K 1% .125W TF TC=0+-100	19701	SFR25H
A4A7R40	1757-0280	3	1	RESISTOR 1K +-1% .125W TF TC=0+-100	19701	SFR25H
A4A7R41	1100-3426	5	1	RESISTOR-TRMR 20 10% TKF SIDE-ADJ 1-TRN	32997	3386X-146-200

**Indicates factory-selectedvalue*

HP Part Number 85662-60186

A4A7 3 MHz Bandwidth Filter

Reference Designatior	HP Part Number	C D	Qty	Description	Mfr Code	Mfr Part Number
A4A7R42	0757-0401		1	RESISTOR 100 +-1% .125W TF TC=0+-100	19701	SFR25H
A4A7R43	0698-3447		1	RESISTOR 422 1% .125W TF TC=0+-100	19701	SFR25H
A4A7R44	0757-0420		1	RESISTOR 750 +-1% .125W TF TC=0+-100	19701	SFR25H
A4A7R45*	0757-0290		1	RESISTOR 6.19K +-1% .125W TF TC=0+-100	19701	SFR25H
A4A7R46*	0757-0290		1	RESISTOR 6.19K +-1% .125W TF TC=0+-100	19701	SFR25H
A4A7R47	0757-0416		1	RESISTOR 511 +-1% .125W TF TC=0+-100	19701	SFR25H
A4A7R48	0757-0405		1	RESISTOR 162 +-1% .125W TF TC=0+-100	19701	SFR25H
A4A7R49	0757-0394	(	1	RESISTOR 51.1 +-1% .125W TF TC=0+-100	19701	SFR25H
A4A7R50	0698-3154	(	1	RESISTOR 4.22K 1% .125W TF TC=0+-100	19701	SFR25H
A4A7R51	0757-0280		1	RESISTOR 1K +-1% .125W TF TC=0+-100	19701	SFR25H
A4A7R52	0757-0346		1	RESISTOR 10 +-1% .125W TF TC=0+-100	91637	CMF-55-1. T-1
A4A7R53	0757-0401	(	1	RESISTOR 100 +-1% .125W TF TC=0+-100	19701	SFR25H
A4A7R54	0698-3447	4	1	RESISTOR 422 1% .125W TF TC=0+-100	19701	SFR25H
A4A7R55	0757-0420		1	RESISTOR 750 +-1% .125W TF TC=0+-100	19701	SFR25H
A4A7R56*	0757-0290	I	1	RESISTOR 6.19K +-1% .125W TF TC=0+-100	19701	SFR25H
A4A7R57*	0757-0290	I	1	RESISTOR 6.19K +-1% .125W TF TC=0+-100	19701	SFR25H
A4A7R58	0757-0405	4	1	RESISTOR 162 +-1% .125W TF TC=0+-100	19701	SFR25H
A4A7R59	0698-3438	3	1	RESISTOR 147 1% .125W TF TC=0+-100	19701	SFR25H
A4A7R60*	0698-4037	(	1	RESISTOR 46.4 1% .125W TF TC=0+-100	19701	SFR25H
A4A7R61	0698-3447	I	1	RESISTOR 422 1% .125W TF TC=0+-100	19701	SFR25H
A4A7R62	0698-3435	(	1	RESISTOR 38.3 1% .125W TF TC=0+-100	19701	SFR25H
A4A7R63	0757-0401	(	1	RESISTOR 100 +-1% .125W TF TC=0+-100	19701	SFR25H
A4A7R64	0757-0401	(	1	RESISTOR 100 +-1% .125W TF TC=0+-100	19701	SFR25H
A4A7R65	0757-0401	(	1	RESISTOR 100 +-1% .125W TF TC=0+-100	19701	SFR25H
A4A7R66*	0757-0395	1	1	RESISTOR 56.2 +-1% .125W TF TC=0+-100	19701	SFR25H
A4A7R67	0698-3443	(	1	RESISTOR 287 1% .125W TF TC=0+-100	19701	SFR25H
A4A7R68*	0757-0402	1	1	RESISTOR 110 +-1% .125W TF TC=0+-100	19701	SFR25H
A4A7R69	0698-0082	I	1	RESISTOR 464 1% .125W TF TC=0+-100	19701	SFR25H
A4A7R70*	0698-0082	I	1	RESISTOR 464 1% .125W TF TC=0+-100	19701	SFR25H
A4A7R71	0757-0416	I	1	RESISTOR 511 +-1% .125W TF TC=0+-100	19701	SFR25H
A4A7R72*	3698-0083	R	1	RESISTOR 1.96K 1% .125W TF TC=0+-100	19701	SFR25H
A4A7R73	3757-0416	7	1	RESISTOR 511 +-1% .125W TF TC=0+-100	19701	SFR25H
A4A7R74*	0757-0395	1	1	RESISTOR 56.2 +-1% .125W TF TC=0+-100	19701	SFR25H
A4A7R75	3698-3443	3	1	RESISTOR 287 1% .125W TF TC=0+-100	19701	SFR25H
A4A7R76*	0757-0402	1	1	RESISTOR 110 +-1% .125W TF TC=0+-100	19701	SFR25H
A4A7R77	1698-0082	7	1	RESISTOR 464 1% .125W TF TC=0+-100	19701	SFR25H
A4A7R78*	0698-0082	7	1	RESISTOR 464 1% .125W TF TC=0+-100	19701	SFR25H
A4A7R79	1757-0416	7	1	RESISTOR 511 +-1% .125W TF TC=0+-100	19701	SFR25H
A4A7R80*	0698-0083	3	1	RESISTOR 1.96K 1% .125W TF TC=0+-100	19701	SFR25H
A4A7R81	1757-0416	7	1	RESISTOR 511 +-1% .125W TF TC=0+-100	19701	SFR25H
A4A7R82*	1757-0395	L	1	RESISTOR 56.2 +-1% .125W TF TC=0+-100	19701	SFR25H
A4A7R83	0698-3443	3	1	RESISTOR 287 1% .125W TF TC=0+-100	19701	SFR25H
A4A7R84*	0757-0402	L	1	RESISTOR 110 +-1% .125W TF TC=0+-100	19701	SFR25H
A4A7R85	0698-0082	7	1	RESISTOR 464 1% .125W TF TC=0+-100	19701	SFR25H
A4A7R86*	0698-3447	I	1	RESISTOR 422 1% .125W TF TC=0+-100	19701	SFR25H
A4A7R87	0757-0416	I	1	RESISTOR 511 +-1% .125W TF TC=0+-100	19701	SFR25H
A4A7R88*	0698-0083	3	1	RESISTOR 1.96K 1% .125W TF TC=0+-100	19701	SFR25H
A4A7R89	0757-0416	7	1	RESISTOR 511 +-1% .125W TF TC=0+-100	19701	SFR25H

**Indicates factory-selected value*

HP Part Number 85662-60186

A4A7 3 MHz Bandwidth Filter

Reference Designatio	HP Part Number	CD	Qty	Description	Mfr Code	Mfr Part Number
A4A7R90*	0757-0394		1	RESISTOR 51.1 +-1% .125W TF TC=0+-100	19701	SFR25H
A4A7R91	0698-3443		1	RESISTOR 287 1% .125W TF TC=0+-100	19701	SFR25H
A4A7R92*	0757-0402		1	RESISTOR 110 +-1% .125W TF TC=0+-100	19701	SFR25H
A4A7R93	0698-0082		1	RESISTOR 464 1% .125W TF TC=0+-100	19701	SFR25H
A4A7R94*	0698-3447		1	RESISTOR 422 1% .125W TF TC=0+-100	19701	SFR25H
A4A7R95	0757-0416		1	RESISTOR 511 +-1% .125W TF TC=0+-100	19701	SFR25H
A4A7R96*	0698-0083		1	RESISTOR 1.96K 1% .125W TF TC=0+-100	19701	SFR25H
A4A7R97	0757-0416		1	RESISTOR 511 +-1% .125W TF TC=0+-100	19701	SFR25H
A4A7R98*	0757-0394		1	RESISTOR 51.1 +-1% .125W TF TC=0+-100	19701	SFR25H
A4A7R99	0698-3443		1	RESISTOR 287 1% .125W TF TC=0+-100	19701	SFR25H
A4A7R100*	0757-0402		1	RESISTOR 110 +-1% .125W TF TC=0+-100	19701	SFR25H
A4A7R101	0698-0082		1	RESISTOR 464 1% .125W TF TC=0+-100	19701	SFR25H
A4A7R102*	0698-3447		1	RESISTOR 422 1% .125W TF TC=0+-100	19701	SFR25H
A4A7R103	0757-0416		1	RESISTOR 511 +-1% .125W TF TC=0+-100	19701	SFR25H
A4A7R104*	0698-0083		1	RESISTOR 1.96K 1% .125W TF TC=0+-100	19701	SFR25H
A4A7R105	0757-0416		1	RESISTOR 511 +-1% .125W TF TC=0+-100	19701	SFR25H
A4A7R106	0757-0465		1	RESISTOR 100K +-1% .125W TF TC=0+-100	19701	SFR25H
A4A7R107	0757-0465		1	RESISTOR 100K +-1% .125W TF TC=0+-100	19701	SFR25H
A4A7R108	0757-0465		1	RESISTOR 100K +-1% .125W TF TC=0+-100	19701	SFR25H
A4A7R109	0757-0465		1	RESISTOR 100K +-1% .125W TF TC=0+-100	19701	SFR25H
A4A7TP1	3360-1788		1	CONNECTOR-SGL CONT PIN .045-IN-BSC-SZ SQ	04574	
A4A7TP2	0360-1788		1	CONNECTOR-SGL CONT PIN .045-IN-BSC-SZ SQ	04574	
A4A7TP3	1360-1788		1	CONNECTOR-SGL CONT PIN .045-IN-BSC-SZ SQ	04574	
A4A7TP4	1360-1788		1	CONNECTOR-SGL CONT PIN .045-IN-BSC-SZ SQ	04574	
A4A7TP5	0360-1788		1	CONNECTOR-SGL CONT PIN .045-IN-BSC-SZ SQ	04574	
A4A7TP6	0360-1788		1	:DNNECTOR-SGL CONT PIN .045-IN-BSC-SZ SQ	04574	
A4A7TP7	0360-1788		1	CONNECTOR-SGL CONT PIN .045-IN-BSC-SZ SQ	04574	
A4A7TP8	0360-1788		1	CONNECTOR-SGL CONT PIN .045-IN-BSC-SZ SQ	04574	
A4A7TP9	0360-1788		1	CONNECTOR-SGL CONT PIN .045-IN-BSC-SZ SQ	04574	
A4A7TP10	0360-1788		1	CONNECTOR-SGL CONT PIN .045-IN-BSC-SZ SQ	04574	
A4A7Y1	0410-0404		1	CRYSTAL-QUARTZ, PART OF A MATCHED SET OF FIVE, INCLUDES A4A7Y1-A4A7Y5	00136	
A4A7Y2				CRYSTAL-QUARTZ, PART OF A MATCHED SET OF FIVE, INCLUDES A4A7Y1-A4A7Y5 (REFER TO A4A7Y1)		
A4A7Y3				:RYSTAL-QUARTZ. PART OF A MATCHED SET OF FIVE, INCLUDES A4A7Y1-A4A7Y5 (REFER TO A4A7Y1)		
A4A7Y4				CRYSTAL-QUARTZ, PART OF A MATCHED SET OF FIVE, INCLUDES A4A7Y1-A4A7Y5 (REFER TO A4A7Y1)		
A4A7Y5				CRYSTAL-QUARTZ, PART OF A MATCHED SET OF FIVE, INCLUDES A4A7Y1-A4A7Y5 (REFER TO A4A7Y1)		

**Indicates factory-selected value*

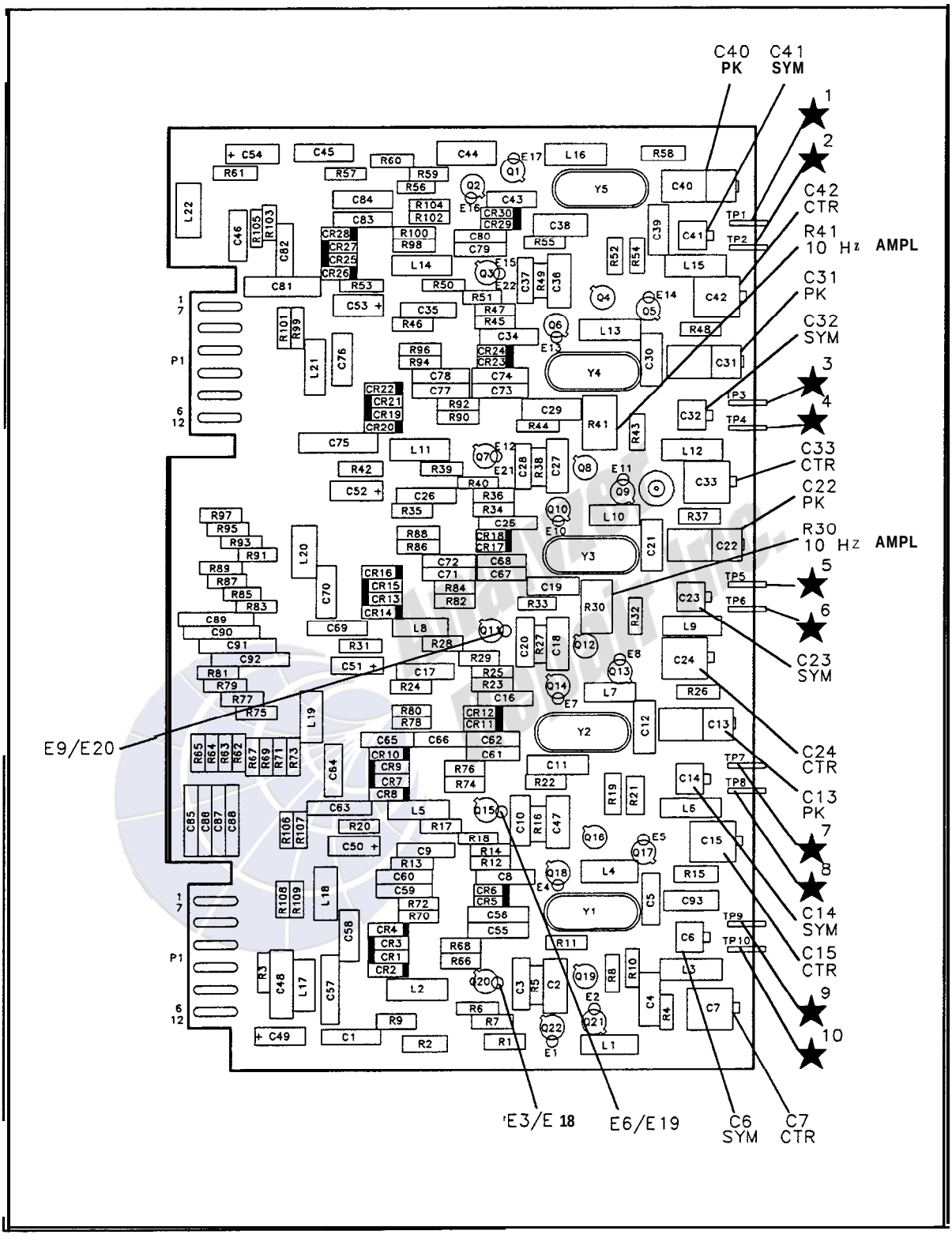

A4A7 3 MHz Bandwidth Filter Component Locations, 85662-60186

(Option 462 Tab)

A4A7 3 MHz BANDWIDTH FILTER
85662-60186 (OPTION 462)
(SERIAL PREFIX: 2542A)

P1

PIN	SIGNAL	TO/FROM	FUNCTION BLOCK
1	GND		G
7	GND		G
2	GND		G
8	GND		G
3	3 MHz	A4A8A1P1-9	E
9	GND		C
4	GND		G
10	GND		G
5	GND		G
11	GND		G
6	GND		G
12	GND		G

P2

PIN	SIGNAL	TO/FROM	FUNCTION BLOCK
1	30 Hz	A4A9,P2-12	F
7	300 Hz	A4A9,P2-14	F
2	10 Hz	A4A9,P2-13	F
8	100 Hz	A4A9,P2-15	F
3	3 MHz	A4A6A2P1-9	A
9	GND		C
4	−15V		G
10	−15V		G
5	GND		G
11	GND		C
6	GND		G
12	GND		G

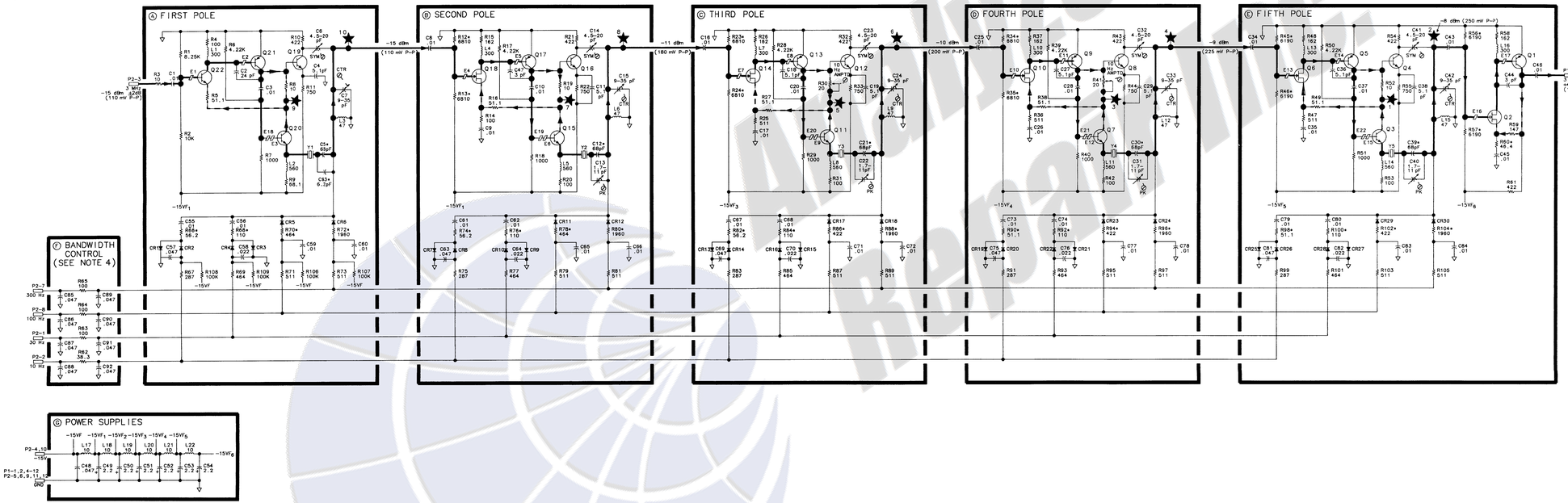

NOTES:

1. REFERENCE DESIGNATORS WITHIN THIS ASSEMBLY ARE ABBREVIATED. FOR COMPLETE REFERENCE DESIGNATION, PREFIX ABBREVIATION WITH ASSEMBLY DESIGNATION.
2. UNLESS OTHERWISE INDICATED: RESISTANCE IS IN OHMS (Ω) CAPACITANCE IS IN MICROFARADS(μF) INDUCTANCE IS IN MICROHENRIES(μH)
3. ASTERISK (*) DENOTES FACTORY SELECTED COMPONENTS; TYPICAL VALUE IS SHOWN. REFER TO NOTE 9 FOR RANGE OF VALUES.
4. TRUTH TABLE FOR BANDWIDTH CONTROL LINES.

RESOLUTION BANDWIDTH	CONTROL LINES			
	300 Hz	100 Hz	30 Hz	10 Hz
1 kHz	>+4V	<−10V	<−10V	<−10V
300 Hz	>+4V	<−10V	<−10V	<−10V
100 Hz	<−10V	>+4V	<−10V	<−10V
30 Hz	<−10V	<−10V	>+4V	<−10V
10 Hz	<−10V	<−10V	>+4V	>+4V

5. INSTRUMENT SETTINGS FOR ALL MEASUREMENTS ON THIS BOARD:

INSTRUMENT PRESET	
CENTER FREQUENCY	CAL. OUT FREQ.
SPAN/DIV	0 Hz
ATTENUATION	0 dB
RESOLUTION BANDWIDTH	1 kHz

6. ALL MEASUREMENTS ARE WITH BOARD ON EXTENDER. POWER LEVELS MAY VARY ± 2 dB. RF VOLTAGES MAY VARY ± 25%.
7. SOURCE VOLTAGE SHOULD BE 0.2 TO 2.0V GREATER THAN GATE VOLTAGE ON Q2, Q8, Q10, Q14 AND Q18. ON THIS BOARD ONLY THE SOURCE IS INDICATED WITH A SQUARE PAD.
8. UNLESS OTHERWISE INDICATED: SIGNALS ENTER AT LEFT SIDE AND EXIT AT RIGHT SIDE OF FUNCTION BLOCKS.
9. THE COMPONENTS LISTED BELOW ARE FACTORY-SELECTED COMPONENTS. THE RANGE OF ACCEPTABLE VALUES FOR EACH FACTORY-SELECTED COMPONENT IS ALSO LISTED.

COMPONENT	ACCEPTABLE VALUES
C10*, C12*, C21*, C30*, C39*	56pF – 82pF
C93*	1.5pF – 12pF
R12*, R13*, R23*, R24*, R34*, R35*, R45*, R46*, R56*, R57	5110Ω – 6810Ω
R60*, R66*, R74*, R75	36.3Ω – 68.1Ω
R68*, R76*, R84*, R92*, R100*	99Ω – 133Ω
R70*, R78*	383Ω – 681Ω
R86*, R94*, R102*	316Ω – 619Ω
R72*, R80*, R88*	1470Ω – 2610Ω
R96*, R104*	36.5Ω – 68.1Ω

A4A7

A4A7 3 MHz BANDWIDTH FILTER, SCHEMATIC DIAGRAM

HP Part Number 85662-60185

A4A8 Attenuator-Bandwidth Filter

Reference Designation	HP Part Number	CD	Qty	Description	Mfr Code	Mfr Part Number
A4A8	85662-60185	2	1	BOARD ASSEMBLY, ATTENUATOR-BANDWIDTH FILTER (OPTION 462) (SERIAL PREFIX: 2542A)	28481	85662-60185
A4A8C1	0140-0200	0	1	CAPACITOR-FXD 390PF +-5% 300VDC MICA 0+7	0902:	CD15FD391J03
A4A8C2	0160-4832	4	1	CAPACITOR-FXD .01UF +-10% 100VDC CER	0422;	SA101C103KAAH
A4A8C3	0160-4832	4	1	CAPACITOR-FXD .01UF +-10% 100VDC CER	0422;	SA101C103KAAH
A4A8C4	0160-4832	4	1	CAPACITOR-FXD .01UF +-10% 100VDC CER	0422;	SA101C103KAAH
A4A8C5	0160-4832	4	1	CAPACITOR-FXD .01UF +-10% 100VDC CER	0422;	SA101C103KAAH
A4A8C6	0160-4832	4	1	CAPACITOR-FXD .01UF +-10% 100VDC CER	0422;	SA101C103KAAH
A4A8C7	0160-4832	4	1	CAPACITOR-FXD .01UF +-10% 100VDC CER	0422;	SA101C103KAAH
A4A8C8	0160-4832	4	1	CAPACITOR-FXD .01UF +-10% 100VDC CER	0422;	SA101C103KAAH
A4A8C9	0160-4832	4	1	CAPACITOR-FXD .01UF +-10% 100VDC CER	0422;	SA101C103KAAH
A4A8C11	0160-4832	4	1	CAPACITOR-FXD .01UF +-10% 100VDC CER	0422;	SA101C103KAAH
A4A8C12	0160-4792	5	1	CAPACITOR-FXD 8.2PF +-.5PF 100VDC CER	04221	SA102A8R2DAAH
A4A8C13	0121-0059	7	1	CAPACITOR-V TRMR-CER 2-8PF 350V PC-MTG	52763	304-324-139
A4A8C14*	1160-4795	8	1	CAPACITDR-FXD 4.7PF +-.5PF 100VDC CER	04222	SA102A4R7DAAH
A4A8C15	0160-4832	4	1	CAPACITOR-FXD .01UF +-10% 100VDC CER	04222	SA101C103KAAH
A4A8C16	1160-4832	4	1	CAPACITOR-FXD .01UF +-10% 100VDC CER	04222	SA101C103KAAH
A4A8C17	1160-2207	3	1	CAP-FXD 300pF 300 V MICA	09023	CD15FD301J03
A4A8C18	1160-4832	4	1	CAPACITOR-FXD .01UF +-10% 100VDC CER	04222	SA101C103KAAH
A4A8C19	1160-4833	5	1	CAPACITOR-FXD .022UF +-10% 100VDC CER	04222	SA201C223KAAH
A4A8C20	1160-4832	4	1	CAPACITOR-FXD .01UF +-10% 100VDC CER	04222	SA101C103KAAH
A4A8C21	0160-4574	1	1	CAPACITOR-FXD 1000PF +-10% 100VDC CER	04222	SA101C102KAAH
A4A8C22	0160-4832	4	1	CAPACITOR-FXD .01UF +-10% 100VDC CER	04222	SA101C103KAAH
A4A8C23	0160-4832	4	1	CAPACITOR-FXD .01UF +-10% 100VDC CER	04222	SA101C103KAAH
A4A8C24	1160-4832	4	1	CAPACITOR-FXD .01UF +-10% 100VDC CER	04222	SA101C103KAAH
A4A8C25	1160-4832	4	1	CAPACITOR-FXD .01UF +-10% 100VDC CER	04222	SA101C103KAAH
A4A8C26	1160-4833	5	1	CAPACITOR-FXD .022UF +-10% 100VDC CER	04222	SA201C223KAAH
A4A8C27	0160-4832	4	1	CAPACITDR-FXD .01UF +-10% 100VDC CER	04222	SA101C103KAAH
A4A8C28	0160-4832	4	1	CAPACITOR-FXD .01UF +-10% 100VDC CER	04222	SA101C103KAAH
A4A8C29	0121-0444	4	1	CAP-VAR 9pF 3pF 160 V	52763	302-450-204
A4A8C30	1160-4832	4	1	CAPACITDR-FXD .01UF +-10% 100VDC CER	04222	SA101C103KAAH
A4A8C31	1160-4832	4	1	CAPACITOR-FXD .01UF +-10% 100VDC CER	04222	SA101C103KAAH
A4A8C32	1121-0036	0	1	CAPACITOR-V TRMR-CER 5.5-18PF 350V PC-MT	52763	304-324-237
A4A8C33	0160-4832	4	1	CAPACITOR-FXD .01UF +-10% 100VDC CER	04222	SA101C103KAAH
A4A8C34	0160-0437	7	1	CAP-FXD 12pF 500 V		301-000-P3K0-120J
A4A8C35*	1160-0134	1	1	CAPACITOR-FXD 220PF +-5% 300VDC MICA 0+7	09023	CD15FD221J03
A4A8C36	0160-4832	4	1	CAPACITOR-FXD .01UF +-10% 100VDC CER	04222	SA101C103KAAH
A4A8C38	0160-4832	4	1	CAPACITDR-FXD .01UF +-10% 100VDC CER	04222	SA101C103KAAH
A4A8C39	'160-4833		1	CAPACITOR-FXD .022UF +-10% 100VDC CER	04222	SA201C223KAAH
A4A8C40	160-4832		1	CAPACITOR-FXD .01UF +-10% 100VDC CER	04222	SA101C103KAAH
A4A8C41	160-5899		1	CAPACITOR-FXD 7.5PF +-.5PF 200VDC CER		MA12C0G2D7R5D
A4A8C42	121-0059		1	CAPACITOR-V TRMR-CER 2-8PF 350V PC-MTG	52763	304-324-139
A4A8C43*	160-4795		1	CAPACITOR-FXD 4.7PF +-.5PF 100VDC CER	04222	SA102A4R7DAAH
A4A8C44	121-0444		1	CAP-VAR 9pF 3pF 160 V	52763	302-450-204
A4A8C45	160-4832		1	CAPACITDR-FXD .01UF +-10% 100VDC CER	04222	SA101C103KAAH
A4A8C46	121-0036		1	CAPACITOR-V TRMR-CER 5.5-18PF 350V PC-MT	52763	304-324-237
A4A8C47	160-4832		1	CAPACITOR-FXD .01UF +-10% 100VDC CER	04222	SA101C103KAAH

**Indicates factory-selected value*

HP Part Number 85662-60185

A4A8 Attenuator-Bandwidth Filter

Reference Designatior	HP Part Number	D	Qty	Description	Mfr Code	Mfr Part Number
A4A8C48	0160-0437		1	CAP-FXD 12pF 500 V		301-000-P3K0-120J
A4A8C49*	0160-0134		1	CAPACITOR-FXD 220PF +-5% 300VDC MICA 0+	0902:	CD15FD221J03
A4A8C50	0160-4574		1	CAPACITOR-FXD 1000PF +-10% 100VDC CER	0422	SA101C102KAAH
A4A8C51	0160-4832	4	1	CAPACITOR-FXD .01UF +-10% 100VDC CER	0422	SA101C103KAAH
A4A8C52	0160-4832	4	1	CAPACITOR-FXD .01UF +-10% 100VDC CER	0422	SA101C103KAAH
A4A8C53	0160-4832	4	1	CAPACITOR-FXD .01UF +-10% 100VDC CER	04221	SA101C103KAAH
A4A8C54	0160-4832	1	1	CAPACITOR-FXD .01UF +-10% 100VDC CER	0422	SA101C103KAAH
A4A8C55	0160-4832	1	1	CAPACITOR-FXD .01UF +-10% 100VDC CER	0422	SA101C103KAAH
A4A8C56	0160-4832	4	1	CAPACITOR-FXD .01UF +-10% 100VDC CER	0422	SA101C103KAAH
A4A8C57	0160-4832	4	1	CAPACITOR-FXD .01UF +-10% 100VDC CER	0422	SA101C103KAAH
A4A8C58	0160-4832	4	1	CAPACITOR-FXD .01UF +-10% 100VDC CER	04221	SA101C103KAAH
A4A8C59	0160-4832	4	1	CAPACITOR-FXO .01UF +-10% 100VDC CER	0422	SA101C103KAAH
A4A8C60	0160-4833	1	1	CAPACITOR-FXD .022UF +-10% 100VDC CER	0422	SA201C223KAAH
A4A8C61	0160-4832	4	1	CAPACITOR-FXD .01UF +-10% 100VDC CER	0422	SA101C103KAAH
A4A8C62	0160-4832	4	1	CAPACITOR-FXD .01UF +-10% 100VDC CER	04225	SA101C103KAAH
A4A8C63*	0140-0194	1	1	CAPACITOR-FXD 110PF +-5% 300VDC MICA	0902:	CD15FD111J03
A4A8C64	0160-4832	4	1	CAPACITOR-FXD .01UF +-10% 100VDC CER	0422	SA101C103KAAH
A4A8C65	0160-4832	4	1	CAPACITOR-FXD .01UF +-10% 100VDC CER	0422	SA101C103KAAH
A4A8C66	0121-0452	4	1	CAPACITOR-V TRMR-AIR 1.3-5.4PF 175V PC-M	7497(	187-0103-028
A4A8C67	0121-0452	4	1	CAPACITOR-V TRMR-AIR 1.3-5.4PF 175V PC-M	7497(	187-0103-028
A4A8C68	0160-4832	4	1	CAPACITOR-FXD .01UF +-10% 100VDC CER	04222	SA101C103KAAH
A4A8C69	0160-4832	4	1	CAPACITOR-FXD .01UF +-10% 100VDC CER	04222	SA101C103KAAH
A4A8C70	0160-2207	3	1	CAP-FXD 300pF 300 V MICA	09023	CD15FD301J03
A4A8C71	0160-4832	4	1	CAPACITOR-FXD .01UF +-10% 100VDC CER	04222	SA101C103KAAH
A4A8C72	0160-4835	7	1	CAPACITOR-FXD .1UF +-10% 50VDC CER	04222	SA115C104KAAH
A4A8C73	0160-4835	7	1	CAPACITOR-FXD .1UF +-10% 50VDC CER	04222	SA115C104KAAH
A4A8C74	0160-4832	4	1	CAPACITOR-FXD .01UF +-10% 100VDC CER	04222	SA101C103KAAH
A4A8C75	0160-4832	4	1	CAPACITOR-FXD .01UF +-10% 100VDC CER	04222	SA101C103KAAH
A4A8C76	0160-4832	4	1	CAPACITOR-FXD .01UF +-10% 100VDC CER	04222	SA101C103KAAH
A4A8C77	0160-5902	1	1	CAPACITOR-FXD 11PF +-5% 200VDC CER 0+-3(		MA12C0G2D110J
A4A8C78*	0140-0198	5	1	CAPACITOR-FXD 200PF +-5% 300VDC MICA	09023	CD15FD201J03
A4A8C79	0160-4832	4	1	CAPACITOR-FXD .01UF +-10% 100VDC CER	04222	SA101C103KAAH
A4A8C80	0160-5902	1	1	CAPACITOR-FXD 11PF +-5% 200VDC CER 0+-3(		MA12C0G2D110J
A4A8C81*	3140-0198	5	1	CAPACITOR-FXD 200PF +-5% 300VDC MICA	09023	CD15FD201J03
A4A8C82	1160-6634		1	:AP-FXD 9pF 50 V		CC45UJ1H090DYP
A4A8C83	)160-6634		1	:AP-FXD 9pF 50 V		CC45UJ1H090DYP
A4A8CR2	901-1070		1	)IODE-PIN 110V	28480	
A4A8CR3	901-1070		1	)IODE-PIN 110V	28480	
A4A8CR4	901-0047		1	)IODE-SWITCHING 20V 75MA 10NS DO-35	71468	
A4A8CR5	901-0047		1	IIODE-SWITCHING 20V 75MA 10NS DO-35	71468	
A4A8CR6	901-1070		1	IIODE-PIN 110V	28480	
A4A8CR7	901-1070		1	)IODE-PIN 110V	28480	
A4A8CR8	901-0535		1	)IODE-SCHOTTKY SM SIG		
A4A8CR9	901-0047		1	IIODE-SWITCHING 20V 75MA 10NS DO-35	71468	
A4A8CR10	901-0535		1	)IODE-SCHOTTKY SM SIG		
A4A8CR11	901-0047		1	)IODE-SWITCHING 20V 75MA 10NS DO-35	71468	
A4A8CR12	901-0047		1	)IODE-SWITCHING 20V 75MA 10NS DO-35	71468	

**Indicates factory-selected value*

HP Part Number 85662-60185

A4A8 Attenuator-Bandwidth Filter

Reference Designatior	HP Part Number	C D	Qty	Description	Mfr Code	Mfr Part Number
A4A8CR13	1901-1070		1	DIODE-PIN 110V	2848(	
A4A8CR14	1901-0535		1	DIODE-SCHOTTKY SM SIG		
A4A8CR15	1901-0047		1	DIODE-SWITCHING 20V 75MA 10NS DO-35	71468	
A4A8CR16	1901-0535		1	DIODE-SCHOTTKY SM SIG		
A4A8CR17	1901-1070		1	DIODE-PIN 110V	2848(	
A4A8CR18	1901-1070		1	DIODE-PIN 110V	2848(	
A4A8CR19	1901-0535		1	DIODE-SCHDTTKY SM SIG		
A4A8E1	9170-0029		1	CORE-SHIELDING BEAD	0211‹	56-590-65A2/4A
A4A8E3	9170-0029		1	CORE-SHIELDING BEAD	0211‹	56-590-65A2/4A
A4A8E4	9170-0029		1	CORE-SHIELDING BEAD	0211‹	56-590-65A2/4A
A4A8E5	9170-0029		1	CORE-SHIELDING BEAD	02114	56-590-65A2/4A
A4A8E6	9170-0029		1	CORE-SHIELDING BEAD	02114	56-590-65A2/4A
A4A8E8	9170-0029		1	CORE-SHIELDING BEAD	02114	56-590-65A2/4A
A4A8E9	9170-0029		1	CORE-SHIELDING BEAD	02114	56-590-65A2/4A
A4A8E10	9170-0029		1	CORE-SHIELDING BEAD	02114	56-590-65A2/4A
A4A8E11	9170-0029		1	CORE-SHIELDING BEAD	02114	56-590-65A2/4A
A4A8E12	9170-0029		1	CORE-SHIELDING BEAD	02114	56-590-65A2/4A
A4A8E13	9170-0029		1	CORE-SHIELDING BEAD	02114	56-590-65A2/4A
A4A8E14	9170-0029		1	CORE-SHIELDING BEAD	02114	56-590-65A2/4A
A4A8E15	9170-0029		1	CORE-SHIELDING BEAD	02114	56-590-65A2/4A
A4A8J1	1250-2112		1	CONNECTOR-RF SMB M SGL-HOLE-FR 50-OHM	98291	051-047-0259-220
A4A8L1	9100-3314		1	INDUCTOR RF-CH-MLD 150NH +-5% .166D-INX.	24226	15M150J
A4A8L2	9100-3313		1	INDUCTOR RF-CH-MLD 22UH +-5% .166D-INX.3	24226	15M222J
A4A8L3	9140-0453	9	1	INDUCTOR RF-CH-MLD 6.8UH +-5% 166D-INX.	24226	15M-681J
A4A8L4	9100-3560	5	1	INDUCTOR RF-CH-MLD 5.6UH +-5% 166D-INX.	24226	15M561J
A4A8L5	9100-0539	3	1	INDUCTOR RF-CH-MLD 10UH +-5% .156D-INX.3	24226	15M102J
A4A8L6	9100-0539		1	INDUCTOR RF-CH-MLD 10UH +-5% .156D-INX.3	24226	15M102J
A4A8L7	85662-60188		1	COIL ASSEMBLY 21 MHZ	28480	85662-60188
A4A8L8	9140-0399		1	INDUCTOR RF-CH-MLD 2.2UH +-5% .166D-INX.	24226	15M221J
A4A8L9	9100-3912		1	INDUCTOR RF-CH-MLD 15UH +-5% .166D-INX.3	24226	15M152J
A4A8L10	9140-0453		1	INDUCTOR RF-CH-MLD 6.8UH +-5% .166D-INX.	24226	15M-681J
A4A8L11	9100-3560		1	INDUCTOR RF-CH-MLD 5.6UH +-5% .166D-INX.	24226	15M561J
A4A8L12	9100-3560		1	INDUCTOR RF-CH-MLD 5.6UH +-5% .166D-INX.	24226	15M561J
A4A8L13	9100-0539		1	INDUCTOR RF-CH-MLD 10UH +-5% .156D-INX.3	24226	15M102J
A4A8L14	85662-60188		1	COIL ASSEMBLY 21 MHZ	28480	85662-60188
A4A8L15	9140-0398		1	INDUCTOR RF-CH-MLD 12UH +-5% .166D-INX.3	24226	15M122J
A4A8L16	9100-3912		1	INDUCTOR RF-CH-MLD 15UH +-5% .166D-INX.3	24226	15M152J
A4A8L17	9140-0399		1	INDUCTOR RF-CH-MLD 2.2UH +-5% .166D-INX.	24226	15M221J
A4A8L19	9100-3560		1	INDUCTOR RF-CH-MLD 5.6UH +-5% .166D-INX.	24226	15M561J
A4A8L20	9100-3313		1	INDUCTOR RF-CH-MLD 22UH +-5% .166D-INX.3	24226	15M222J
A4A8L33	9100-3551		1	INDUCTOR RF-CH-MLD 1UH +-5% .166D-INX.38	24226	15M101J
A4A8L34	9100-3562		1	INDUCTOR RF-CH-MLD 4.7UH +-5% .166D-INX.	24226	15M471J
A4A8L35	9100-3562	3	1	INDUCTOR RF-CH-MLD 4.7UH +-5% .166D-INX.	24226	15M471J
\4A8MP2	36701-40001	9	1	EXTRACTOR PC	28480	86701-40001
\4A8MP5	2190-0557		1	IASHER-LK INTL T NO. 10 .195-IN-ID	78189	1210-06-00-0551
\4A8MP6	2950-0078	9	1	NIUT-HEX-DBL-CHAM 10-32-THD .067-IN-THK	74163	500220
\4A8MP7	2200-0101	0	4	SCREW-MACH 4-40 .188-IN-LG PAN-HD-POZI	77250	
\4A8MP8	3960-0069		1	'LUG-HOLE CNCL-HD FOR .125-D-HOLE NYL	02768	207-080501-00-0101

**Indicates factoy-selected value*

HP Part Number 85662-60185

A4A8 Attenuator-Bandwidth Filter

Reference Designatior	HP Part Number	CD	Qty	Description	Mfr Code	Mfr Part Number
A4A8MP9	85662-20038		1	COVER, ATTENUATOR-BANDWIDTH FILTER	28481	85662-20038
A4A8MP10	2190-0401		4	WASHER-FL NM NO. 4 .12-IN-ID .312-IN-OD	7373	1470
A4A8MP11	1200-0081		1	INSULATOR-FLG-BSHG NYLON	2636	974 307
A4A8MP12	1200-0081		1	INSULATOR-FLG-BSHG NYLON	2636	974 307
A4A8MP13	1200-0081		1	INSULATOR-FLG-BSHG NYLON	2636	974 307
A4A8MP14	1200-0081		1	INSULATOR-FLG-BSHG NYLON	2636	974 307
A4A8Q1	1854-0345		1	TRANSISTOR NPN 2N5179 SI TO-72 PD=200MW	0471:	215179
A4A8Q2	1853-0007		1	TRANSISTOR PNP 2N3251 SI TO-18 PD=360MW	0471:	213251
A4A8Q3	1853-0007		1	TRANSISTOR PNP 2N3251 SI TO-18 PD=360MW	0471:	2N3251
A4A8Q4	1855-0267		1	TRANSISTOR J-FET N-CHAN D-MODE TO-92 SI	34671	
A4A8Q5	1854-0404		1	TRANSISTOR NPN SI TO-18 PD=360MW	04713	
A4A8Q6	1853-0007		1	TRANSISTOR PNP 213251 SI TO-18 PD=360MW	04713	2N3251
A4A8Q7	1853-0007		1	TRANSISTOR PNP 2N3251 SI TO-18 PD=360MW	04713	2N3251
A4A8Q8	1855-0267		1	TRANSISTOR J-FET N-CHAN D-MODE TO-92 SI	34677	
A4A8Q9	1853-0007		1	TRANSISTOR PNP 213251 SI TO-18 PD=360MW	04713	213251
A4A8Q10	1855-0267		1	TRANSISTOR J-FET N-CHAN D-MODE TO-92 SI	34677	
A4A8Q11	1854-0404		1	TRANSISTOR NPN SI TO-18 PD=360MW	04713	
A4A8R1	0757-0395		1	RESISTOR 56.2 +-1% .125W TF TC=0+-100	19701	SFR25H
A4A8R2	0698-0083		1	RESISTOR 1.96K 1% .125W TF TC=0+-100	19701	SFR25H
A4A8R3	0757-0401		1	RESISTOR 100 +-1% .125W TF TC=D+-100	19701	SFR25H
A4A8R4	0757-0294		1	RESISTOR 17.8 +-1% .125W TF TC=0+-100	19701	SFR25H
A4A8R5	0757-0401		1	RESISTOR 100 +-1% .125W TF TC=0+-100	19701	SFR25H
A4A8R6	2100-3053		1	RESISTOR-TRMR 20 20% TKF SIDE-ADJ 17-TRN	73138	89PR20
A4A8R7	2100-3052		1	RESISTOR-TRMR 50 10% TKF SIDE-ADJ 17-TRN	73138	89PR50
A4A8R8	3757-0416		1	RESISTOR 511 +-1% .125W TF TC=0+-100	19701	SFR25H
A4A8R9	3698-3260		1	RESISTOR 464K 1% .125W TF TC=0+-100	19701	SFR25H
A4A8R10	0698-3260		1	RESISTOR 464K 1% .125W TF TC=0+-100	19701	SFR25H
A4A8R11	0757-0280		1	RESISTOR 1K +-1% .125W TF TC=0+-100	19701	SFR25H
A4A8R12	0757-0401		1	RESISTOR 100 +-1% .125W TF TC=0+-100	19701	SFR25H
A4A8R13	0757-0280		1	RESISTOR 1K +-1% .125W TF TC=0+-100	19701	SFR25H
A4A8R14	1698-3155		1	RESISTOR 4.641: 1% .125W TF TC=0+-100	19701	SFR25H
A4A8R15	0698-0082		1	RESISTOR 464 1% .125W TF TC=0+-100	19701	SFR25H
A4A8R16	0698-3429		1	RESISTOR 19.6 1% .125W TF TC=0+-100	19701	SFR25H
A4A8R17	0757-0443		1	RESISTOR 11K +-1% .125W TF TC=0+-100	19701	SFR25H
A4A8R18	0757-0438		1	RESISTOR 5.11K +-1% .125W TF TC=D+-100	19701	SFR25H
A4A8R19*	0698-3260		1	LESISTOR 464K 1% .125W TF TC=0+-100	19701	SFR25H
A4A8R20	0698-3441		1	LESISTOR 215 1% .125W TF TC=0+-100	19701	SFR25H
A4A8R21	0698-3444		1	LESISTOR 316 1% .125W TF TC=0+-100	19701	SFR25H
A4A8R22	1698-3442		1	LESISTOR 237 1% .125W TF TC=0+-100	19701	SFR25H
A4A8R23	1757-0279		1	LESISTOR 3.16K +-1% .125W TF TC=0+-100	19701	SFR25H
A4A8R24*	0757-0346		1	RESISTOR 10 +-1% .125W TF TC=0+-100	91637	CMF-55-1, T-1
A4A8R25	0757-0280		1	RESISTOR 1K +-1% .125W TF TC=0+-100	19701	SFR25H
A4A8R26*	1698-3154		1	RESISTOR 4.221: 1% .125W TF TC=0+-100	19701	SFR25H
A4A8R27	1757-0290		1	RESISTOR 6.19K +-1% .125W TF TC=D+-100	19701	SFR25H
A4A8R28	1757-0290		1	RESISTOR 6.19K +-1% .125W TF TC=0+-100	19701	SFR25H
A4A8R29*	0698-0083		1	RESISTOR 1.96K 1% .125W TF TC=0+-100	19701	SFR25H
A4A8R30*	0757-0442		1	RESISTOR 10K +-1% .125W TF TC=0+-100	19701	SFR25H

Indicates factory-selected value

HP Part Number 85662-60185

A4A8 Attenuator-Bandwidth Filter

Reference Designation	HP Part Number	C D	Qty	Description	Mfr Code	Mfr Part Number
A4A8R31	0698-3156	2	1	RESISTOR 14.7K 1% .125W TF TC=0+-100	19701	SFR25H
A4A8R32	0698-3156	2	1	RESISTOR 14.7K 1% .125W TF TC=0+-100	19701	SFR25H
A4A8R33	0757-0280	3	1	RESISTOR 1K +-1% .125W TF TC=0+-100	19701	SFR25H
A4A8R34*				SEE SCHEMATIC FUNCTION BLOCK J		
A4A8R35	2100-3163	8	1	RESISTOR-TRMR 1M 20% TKF SIDE-ADJ 17-TRN	73138	89PR1M
A4A8R36*				SEE SCHEMATIC FUNCTION BLOCK J		
A4A8R38	0757-1094	9	1	RESISTOR 1.47K +-1% .125W TF TC=D+-100	19701	SFR25H
A4A8R39	0757-0442	9	1	RESISTOR 10K +-1% .125W TF TC=0+-100	19701	SFR25H
A4A8R40	2100-3052	4	1	RESISTOR-TRMR 50 10% TKF SIDE-ADJ 17-TRN	73138	89PR50
A4A8R41	0757-0401	0	1	RESISTOR 100 +-1% .125W TF TC=0+-100	19701	SFR25H
A4A8R42	0757-0280	3	1	RESISTOR 1K +-1% .125W TF TC=0+-100	19701	SFR25H
A4A8R43	0698-3155	1	1	RESISTOR 4.641: 1% .125W TF TC=0+-100	19701	SFR25H
A4A8R44	0698-0082	7	1	RESISTOR 464 1% .125W TF TC=0+-100	19701	SFR25H
A4A8R45	0757-0443	0	1	RESISTOR 11K +-1% .125W TF TC=0+-100	19701	SFR25H
A4A8R46	0757-0438	3	1	RESISTOR 5.11K +-1% .125W TF TC=0+-100	19701	SFR25H
A4A8R47	0698-3441	8	1	RESISTOR 215 1% .125W TF TC=0+-100	19701	SFR25H
A4A8R48	0698-3444	1	1	RESISTOR 316 1% .125W TF TC=0+-100	19701	SFR25H
A4A8R49	0698-3442	9	1	RESISTOR 237 1% .125W TF TC=0+-100	19701	SFR25H
A4A8R50	0757-0280	3	1	RESISTOR 1K +-1% .125W TF TC=0+-100	19701	SFR25H
A4A8R51	0757-0279	0	1	RESISTOR 3.16K +-1% .125W TF TC=0+-100	19701	SFR25H
A4A8R52*	0698-3154	0	1	RESISTOR 4.221: 1% .125W TF TC=0+-100	19701	SFR25H
A4A8R53	0757-0290	5	1	RESISTOR 6.19K +-1% .125W TF TC=0+-100	19701	SFR25H
A4A8R54	0757-0290	5	1	RESISTOR 6.19K +-1% .125W TF TC=0+-100	19701	SFR25H
A4A8R55*	0757-0443	0	1	RESISTOR 11K +-1% .125W TF TC=0+-100	19701	SFR25H
A4A8R56	0698-3156	2	1	RESISTOR 14.7K 1% .125W TF TC=0+-100	19701	SFR25H
A4A8R57	0698-3156	2	1	RESISTOR 14.7K 1% .125W TF TC=0+-100	19701	SFR25H
A4A8R58	0698-3440	7	1	RESISTOR 196 1% .125W TF TC=0+-100	19701	SFR25H
A4A8R59	0698-0082	7	1	RESISTOR 464 1% .125W TF TC=0+-100	19701	SFR25H
A4A8R60	0698-3154	0	1	RESISTOR 4.22K 1% .125W TF TC=0+-100	19701	SFR25H
A4A8R61	0698-3154	0	1	RESISTOR 4.22K 1% .125W TF TC=0+-100	19701	SFR25H
A4A8R62	0757-0280	3	1	RESISTOR 1K +-1% .125W TF TC=0+-100	19701	SFR25H
A4A8R63	0698-3443	0	1	RESISTOR 287 1% .125W TF TC=0+-100	19701	SFR25H
A4A8R64	0757-0401	0	1	RESISTOR 100 +-1% .125W TF TC=0+-100	19701	SFR25H
A4A8R66	0757-0438	3	1	RESISTOR 5.11K +-1% .125W TF TC=0+-100	19701	SFR25H
A4A8R67	0757-0438	3	1	RESISTOR 5.11K +-1% .125W TF TC=0+-100	19701	SFR25H
A4A8R68	0757-0280	3	1	RESISTOR 1K +-1% .125W TF TC=0+-100	19701	SFR25H
A4A8R69	0757-0442	9	1	RESISTOR 10K +-1% .125W TF TC=0+-100	19701	SFR25H
A4A8R70	0757-0442	9	1	RESISTOR 10K +-1% .125W TF TC=0+-100	19701	SFR25H
A4A8R71	0757-0465	6	1	RESISTOR 100K +-1% .125W TF TC=0+-100	19701	SFR25H
A4A8R72	0757-0180	2	1	RESISTOR 31.6 +-1% .125W TF TC=0+-100	19701	SFR25H
A4A8R73	0757-0180	2	1	RESISTOR 31.6 +-1% .125W TF TC=0+-100	19701	SFR25H
A4A8TP1	0360-1788	7	1	CONNECTOR-SGL CONT PIN .045-IN-BSC-SZ SQ	04574	
A4A8TP2	0360-1788	7	1	CONNECTOR-SGL CONT PIN .045-IN-BSC-SZ SQ	04574	
A4A8TP3	1251-0600	0	1	CONNECTOR-SGL CONT PIN 1.14-MM-BSC-SZ SQ	27264	16-06-0034
A4A8TP4	0360-1788	7	1	CONNECTOR-SGL CONT PIN .045-IN-BSC-SZ SQ	04574	
A4A8TP5	0360-1788	7	1	CONNECTOR-SGL CONT PIN .045-IN-BSC-SZ SQ	04574	
A4A8TP6	1251-0600	0	1	CONNECTOR-SGL CONT PIN 1.14-MM-BSC-SZ SQ	27264	16-06-0034
A4A8VR1	1902-3139	7	1	DIODE-ZNR 8.25V 5% DO-35 PD=.4W	04713	

**Indicates factory-selected value*

HP Part Number 85662-60185

A4A8 Attenuator-Bandwidth Filter

Reference Designatior	HP Part Number	C D	Qty	Description	Mfr Code	Mfr Part Number
A4A8Y1				CRYSTAL, QUARTZ, PART OF A MATCHED SET OF SIX, INCLUDES A4A4Y1-3, A4A6A1Y1, ANC A4A8Y1-2 (REFER TO A4A4Y1)		
A4A8Y2				CRYSTAL, QUARTZ, PART OF A MATCHED SET OF SIX, INCLUDES A4A4Y1-3, A4A6A1Y1, AND A4A8Y1-2 (REFER TO A4A4Y1)		

Analyzer Repair Inc.

**Indicates factory-selected value*

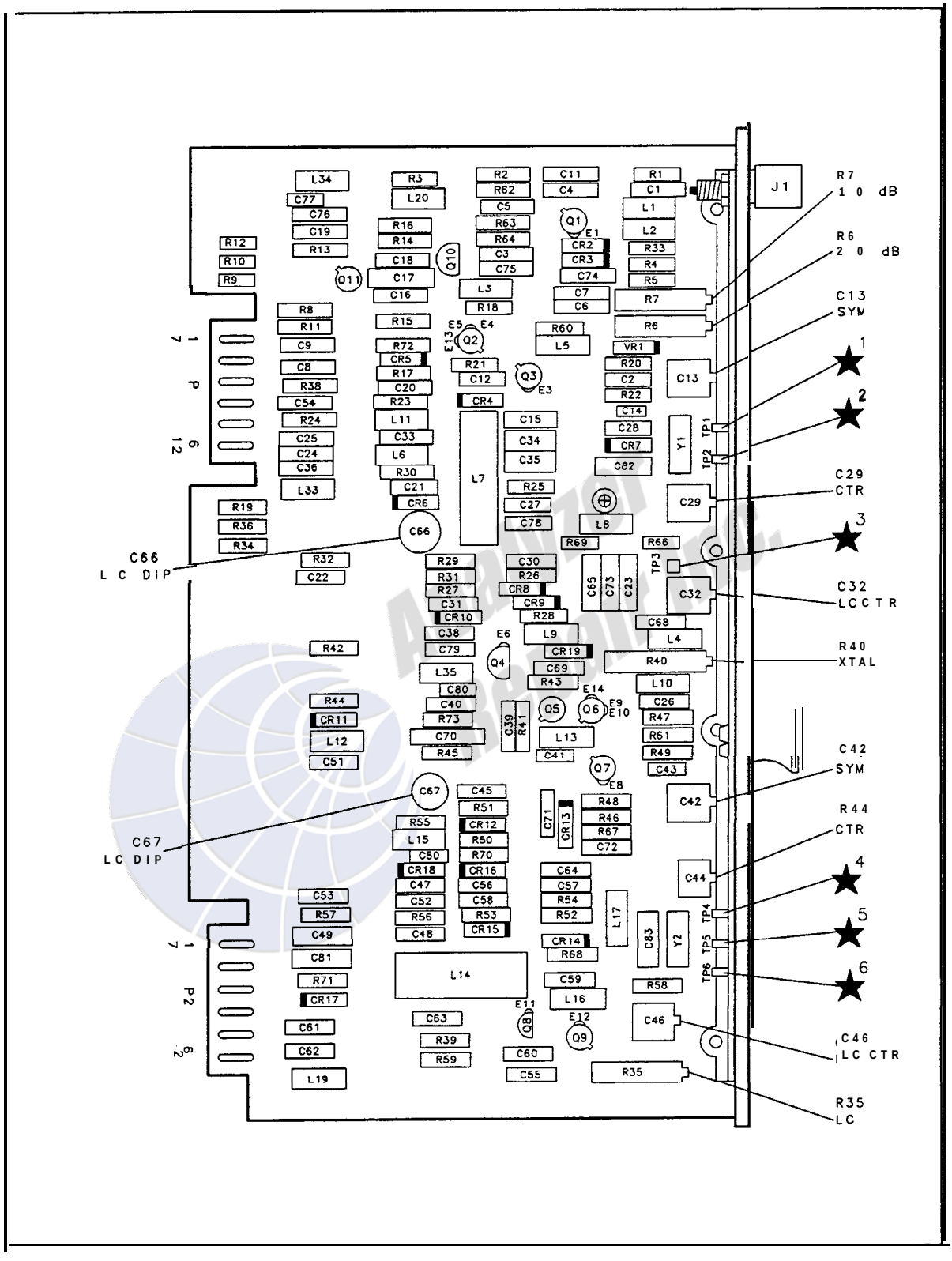

A4A8 Attenuator-Bandwidth Filter Component Locations, 85662-60185

(Option 462 Tab)

A4A8 ATTENUATOR-BANDWIDTH FILTER
85662-60185 (OPTION 462)
(SERIAL PREFIX: 2542A)

P1

PIN	SIGNAL	TO/FROM	FUNCTION BLOCK
1	GND	A4A9P1-6	J
7	A10dB		A
2	GND	A4A9P1-7	J
8	A20dB		A
3	GND		J
9	GND		J
4	GND	A4A9P1-4	J
10	BW7		B
5	GND	A4A9P1-5	J
11	BW63		B
6	+10VF	A4A5P1-5	J
12	BW5	A4A9P1-12	B

P2

PIN	SIGNAL	TO/FROM	FUNCTION BLOCK
1	GND		J
7	GND		J
2	GND		J
8	GND		J
3	GND		J
9	GND		J
4	−15V		J
10	GND		J
5	+15V		J
11	+15V		J
6	21.4 MHz	A4A6A2P1-12	I
12	GND		J

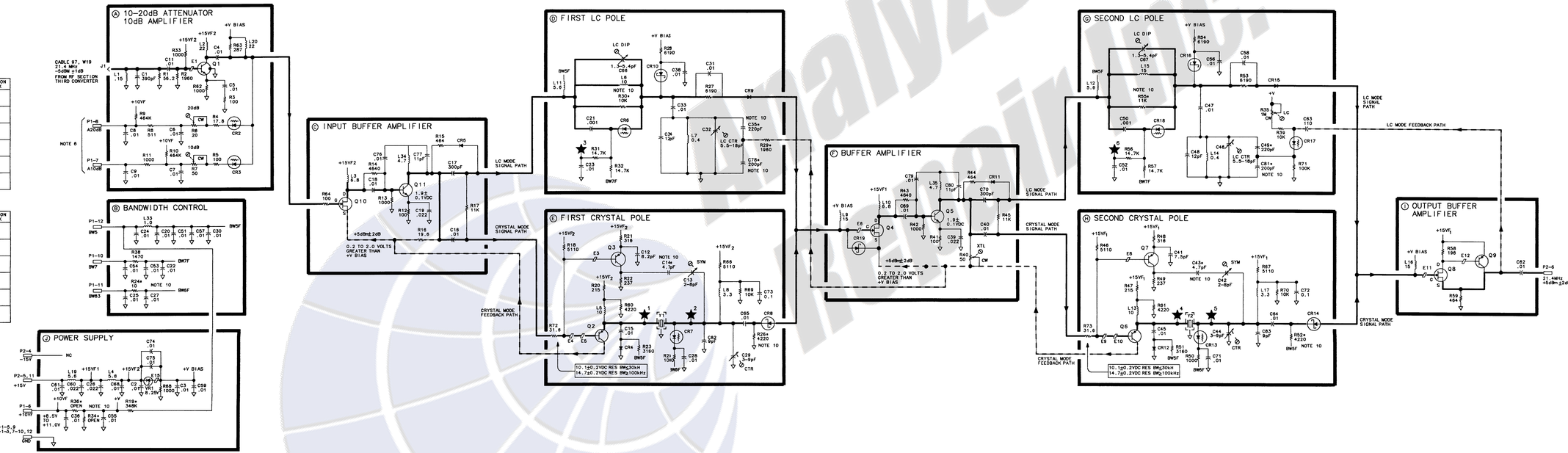

NOTES:

1. REFERENCE DESIGNATORS WITHIN THIS ASSEMBLY ARE ABBREVIATED. FOR COMPLETE REFERENCE DESIGNATION, PREFIX ABBREVIATION WITH ASSEMBLY DESIGNATION.
2. UNLESS OTHERWISE INDICATED: RESISTANCE IS IN OHMS (Ω). CAPACITANCE IS IN MICROFARADS (μF) INDUCTANCE IS IN MICROHENRIES (μH)
3. ASTERISK (*) DENOTES A FACTORY SELECTED COMPONENT. TYPICAL VALUE IS SHOWN. REFER TO NOTE 10 FOR FULL RANGE OF VALUES.
4. MNEMONIC TABLE:

MNEMONIC	DESCRIPTION
A20dB	ATTENUATION 20dB
A10dB	ATTENUATION 10dB
BW5	BANDWIDTH 5
BW7	BANDWIDTH 7(LC MODE)
BW63	BANDWIDTH 63(CRYSTAL) MODE)

5. TABLE OF RESOLUTION BANDWIDTH CONTROL LINE VOLTAGES.

RESOLUTION BANDWIDTH	TYPICAL VALUES		
	BW5	BW7	BW63
3kHz	+14.8	+9.2	−14
1MHz	+14.8	+14.1	−14
300kHz	+14.8	+14.5	−14
100kHz	+14.8	+14.5	−14
30kHz	+14.8	+14.5	+14.3
10kHz	−.6	+14.3	+9.2
3kHz	−.6	+14.3	+9.2
1kHz AND NARROWER	−.6	+14.3	+14.3

6.

REFERENCE LEVEL RES BW ≥ 3kHz	dBm		≤−10
REFERENCE LEVEL RES BW ≤ 1kHz	dBm	−10	−20 ≤30
A20dB	LOG	0V	+9V +9V
	LIN	0V	+9V +9V
A10dB	LOG	+9V	0V +9V
	LIN	+9V	0V +9V
INPUT ATTENUATION - - -		0dB	

7. POWER LEVELS MEASURED UNDER THE FOLLOWING CONDITIONS:
   INSTRUMENT PRESET
   CENTER FREQUENCY — CAL. OUT FREQ.
   FREQUENCY SPAN — 0Hz
   RESOLUTION BW — 0dB
   RESOLUTION BANDWIDTH — 3kHz
8. SOURCE PIN ON Q8, Q4, AND Q10 IS INDICATED SQUARE PAD ON PC BOARD.
9. UNLESS OTHERWISE INDICATED: SIGNALS ENTER AT LEFT SIDE AND EXIT AT RIGHT SIDE OF FUNCTION BLOCKS.
10. THE COMPONENTS LISTED BELOW ARE FACTORY-SELECTED COMPONENTS. THE RANGE OF ACCEPTABLE VALUES FOR EACH FACTORY-SELECTED COMPONENT IS ALSO LISTED.

COMPONENT	ACCEPTABLE VALUES
C14*	1.0pF – 8.2pF
C25*	10pF – 47pF
C35*	150pF – 270pF
C48*	180pF – 270pF
C78*	180pF – 270pF
C81*	180pF – 270pF
R19*	100KΩ – 1MΩ
R24*	SHORT – 100Ω
R25*	383Ω – 909Ω
R29*	909Ω – 2370Ω
R30*	619Ω – 1.8kΩ
R34*	100KΩ – OPEN
R36*	100KΩ – OPEN
R52*	383Ω – 909Ω
R54*	68.0Ω – 17.6KΩ

A4A8

A4A8 ATTENUATOR-BANDWIDTH FILTER, SCHEMATIC DIAGRAM

HP Part Number 85662-60187

A4A9 IF Control

Reference Designation	HP Part Number	C. D	Qty	Description	Mfr Code	Mfr Part Number
A4A9	85662-60187	4	1	BOARD ASSEMBLY, IF CONTROL (OPTION 462) (SERIAL PREFIX: 2542A-2813A)	28480	85662-60187
A4A9C1	0160-4832	4	1	CAPACITOR-FXD .01UF +-10% 100VDC CER	04222	SA101C103KAAH
A4A9C2	0180-0197	8	1	CAP-FXD 2.2uF 20 V TA	56289	150D225X9020A2-DYS
A4A9C3	0160-4832	4	1	CAPACITOR-FXD .01UF +-10% 100VDC CER	04222	SA101C103KAAH
A4A9C4	0160-4832	4	1	CAPACITOR-FXD .01UF +-10% 100VDC CER	04222	SA101C103KAAH
A4A9C5	0160-4832	4	1	CAPACITOR-FXD .01UF +-10% 100VDC CER	04222	SA101C103KAAH
A4A9C6	0160-4832	4	1	CAPACITOR-FXD .01UF +-10% 100VDC CER	04222	SA101C103KAAH
A4A9C7	0160-4832	4	1	CAPACITOR-FXD .01UF +-10% 100VDC CER	04222	SA101C103KAAH
A4A9C8	0160-4832	4	1	CAPACITOR-FXD .01UF +-10% 100VDC CER	04222	SA101C103KAAH
A4A9C9	0160-4832	4	1	CAPACITOR-FXD .01UF +-10% 100VDC CER	04222	SA101C103KAAH
A4A9C10	0160-4832	4	1	CAPACITOR-FXD .01UF +-10% 100VDC CER	04222	SA101C103KAAH
A4A9C11	0160-4832	4	1	CAPACITOR-FXD .01UF +-10% 100VDC CER	04222	SA101C103KAAH
A4A9C12	0160-4832	4	1	CAPACITOR-FXD .01UF +-10% 100VDC CER	04222	SA101C103KAAH
A4A9C13	0160-4832	4	1	CAPACITOR-FXD .01UF +-10% 100VDC CER	04222	SA101C103KAAH
A4A9C14	0160-4832	4	1	CAPACITOR-FXD .01UF +-10% 100VDC CER	04222	SA101C103KAAH
A4A9C15	0160-4822	2	1	CAPACITOR-FXD 1000PF +-5% 100VDC CER 0+-	04222	SA201A102JAAH
A4A9C16	0160-4822	2	1	CAPACITOR-FXD 1000PF +-5% 100VDC CER 0+-	04222	SA201A102JAAH
A4A9C17	)160-4822	2	1	CAPACITOR-FXD 1000PF +-5% 100VDC CER 0+-	04222	SA201A102JAAH
A4A9C18	1160-4822	2	1	CAPACITOR-FXD 1000PF +-5% 100VDC CER 0+-	04222	SA201A102JAAH
A4A9C19	)160-4832	4	1	CAPACITOR-FXD .01UF +-10% 100VDC CER	04222	SA101C103KAAH
A4A9C20	1180-0197	8	1	:AP-FXD 2.2uF 20 V TA	56289	150D225X9020A2-DYS
A4A9C21	1180-0197	8	1	ZAP-FXD 2.2uF 20 V TA	56289	150D225X9020A2-DYS
A4A9C22	)180-0197	8	1	ZAP-FXD 2.2uF 20 V TA	56289	150D225X9020A2-DYS
A4A9CR1	1901-0050	3	1	IIODE-SWITCHING 80V 200MA 2NS DO-35	9N171	1N4150
A4A9CR2	1901-0050	3	1	IIODE-SWITCHING 80V 200MA 2NS DO-35	9N171	1N4150
A4A9CR3	1901-0050	3	1	)IODE-SWITCHING 80V 200MA 2NS DO-35	9N171	1N4150
A4A9CR4	1901-0050	3	1	IIODE-SWITCHING 80V 200MA 2NS DO-35	9N171	1N4150
A4A9CR5	1901-0050	3	1	)IODE-SWITCHING 80V 200MA 2NS DO-35	9N171	1N4150
A4A9CR6	1901-0050	3	1	)IODE-SWITCHING 80V 200MA 2NS DO-35	9N171	1N4150
A4A9CR7	1901-0050	3	1	)IODE-SWITCHING 80V 200MA 2NS DO-35	9N171	1N4150
A4A9CR8	1901-0050	3	1	)IODE-SWITCHING 80V 200MA 2NS DO-35	9N171	1N4150
A4A9CR9	1901-0050	3	1	)IODE-SWITCHING 80V 200MA 2NS DO-35	9N171	1N4150
A4A9CR10	1901-0050	3	1	)IODE-SWITCHING 80V 200MA 2NS DO-35	9N171	1N4150
A4A9CR11	1901-0050	3	1	)IODE-SWITCHING 80V 200MA 2NS DO-35	9N171	1N4150
A4A9CR12	1901-0050	3	1	)IODE-SWITCHING 80V 200MA 2NS DO-35	9N171	1N4150
A4A9CR13	1901-0050	3	1	)IODE-SWITCHING 80V 200MA 2NS DO-35	9N171	1N4150
A4A9CR14	1901-0050	3	1	)IODE-SWITCHING 80V 200MA 2NS DO-35	9N171	1N4150
A4A9CR15	1901-0050	3	1	)IODE-SWITCHING 80V 200MA 2NS DO-35	9N171	1N4150
A4A9CR16	1901-0050	3	1	)IODE-SWITCHING 80V 200MA 2NS DO-35	9N171	1N4150
A4A9CR17	1901-0050	3	1	)IODE-SWITCHING 80V 200MA 2NS DO-35	9N171	1N4150
A4A9CR18	1901-0050	3	1	)IODE-SWITCHING 80V 200MA 2NS DO-35	9N171	1N4150
A4A9CR19	1901-0050	3	1	)IODE-SWITCHING 80V 200MA 2NS DO-35	9N171	1N4150
A4A9CR20	1901-0050	3	1	)IODE-SWITCHING 80V 200MA 2NS DO-35	9N171	1N4150
A4A9CR21	1901-0050	3	1	IIODE-SWITCHING 80V 200MA 2NS DO-35	9N171	1N4150
A4A9CR22	1901-0050	3	1	)IODE-SWITCHING 80V 200MA 2NS DO-35	9N171	1N4150
A4A9CR23	1901-0050	3	1	)IODE-SWITCHING 80V 200MA 2NS DO-35	9N171	1N4150

**Indicates factory-selected value*

HP Part Number 85662-60187

A4A9 IF Control

Reference Designatior	HP Part Number	C D	Qty	Description	Mfr Code	Mfr Part Number
A4A9CR24	1901-0050		1	DIODE-SWITCHING 80V 200MA 2NS DO-35	9N17	1N4150
A4A9CR25	1901-0050		1	DIODE-SWITCHING 80V 200MA 2NS DO-35	9N17	1N4150
A4A9CR26	1901-0050		1	DIODE-SWITCHING 80V 200MA 2NS DO-35	9N17	1N4150
A4A9CR27	1901-0050		1	DIODE-SWITCHING 80V 200MA 2NS DO-35	9N17	1N4150
A4A9CR28	1901-0050		1	DIODE-SWITCHING BOV 200MA 2NS DO-35	9N17	1N4150
A4A9CR29	1901-0050		1	DIODE-SWITCHING 80V 200MA 2NS DO-35	9N171	1N4150
A4A9L1	9100-1618		1	INDUCTOR RF-CH-MLD 5.6UH +-10% .166D-INX	2422E	15M561K
A4A9R2	0757-0438		1	RESISTOR 5.11K +-1% .125W TF TC=0+-100	2M627	CRB14 OR CRB25
A4A9R3	0757-0289		1	RESISTOR 13.3K +-1% .125W TF TC=0+-100	2M627	CRB14 OR CRB25
A4A9R6	0757-0463		1	RESISTOR 82.51: +-1% .125W TF TC=0+-100	2M627	CRB14 OR CRB25
A4A9R7	0698-3456		1	RESISTOR 287K 1% .125W TF TC=D+-100	2M627	CRB14 OR CRB25
A4A9R10	0757-0458		1	RESISTOR 51.1K +-1% .125W TF TC=0+-100	2M627	CRB14 OR CRB25
A4A9R11	0757-0288		1	RESISTOR 9.09K +-1% .125W TF TC=0+-100	2M627	CRB14 OR CRB25
A4A9R14	0757-0442		1	RESISTOR 10K +-1% .125W TF TC=0+-100	2M627	CRB14 OR CRB25
A4A9R15	0698-0082		1	RESISTOR 464 1% .125W TF TC=0+-100	2M627	CRB14 OR CRB25
A4A9R16	0757-0424		1	RESISTOR 1.1K +-1% .125W TF TC=0+-100	2M627	CRB14 OR CRB25
A4A9R17	0757-0442		1	RESISTOR 10K +-1% .125W TF TC=0+-100	2M627	CRB14 OR CRB25
A4A9R18	0757-0317		1	RESISTOR 1.33K +-1% .125W TF TC=0+-100	2M627	CRB14 OR CRB25
A4A9R19	0757-0442		1	RESISTOR 10K +-1% .125W TF TC=0+-100	2M627	CRB14 OR CRB25
A4A9R20	0757-0438		1	RESISTOR 5.11K +-1% .125W TF TC=0+-100	2M627	CRB14 OR CRB25
A4A9R21	0757-0419		1	RESISTOR 681 +-1% .125W TF TC=0+-100	2M627	CRB14 OR CRB25
A4A9R22	0757-0438		1	RESISTOR 5.11K +-1% .125W TF TC=0+-100	2M627	CRB14 OR CRB25
A4A9R23	0757-0419		1	RESISTOR 681 +-1% .125W TF TC=0+-100	2M627	CRB14 OR CRB25
A4A9R24	0757-0280		1	RESISTOR 1K +-1% .125W TF TC=0+-100	2M627	CRB14 OR CRB25
A4A9R25	0757-0438		1	RESISTOR 5.11K +-1% .125W TF TC=0+-100	2M627	CRB14 OR CRB25
A4A9R26	3757-0428		1	RESISTOR 1.62K +-1% .125W TF TC=0+-100	2M627	CRB14 OR CRB25
A4A9R27	3757-0438		1	RESISTOR 5.11K +-1% .125W TF TC=0+-100	2M627	CRB14 OR CRB25
A4A9R28	0757-0438		1	RESISTOR 5.11K +-1% .125W TF TC=D+-100	2M627	CRB14 OR CRB25
A4A9R29	0698-0085		1	RESISTOR 2.61K 1% .125W TF TC=0+-100	2M627	CRB14 OR CRB25
A4A9R30	0757-0458		1	RESISTOR 51.1K +-1% .125W TF TC=0+-100	2M627	CRB14 OR CRB25
A4A9R31	0757-0279		1	RESISTOR 3.16K +-1% .125W TF TC=0+-100	2M627	CRB14 OR CRB25
A4A9R32	1757-0289		1	RESISTOR 13.3K +-1% .125W TF TC=0+-100	2M627	CRB14 OR CRB25
A4A9R33	1698-3156		1	RESISTOR 14.7K 1% .125W TF TC=0+-100	2M627	CRB14 OR CRB25
A4A9R34	0698-3437		1	RESISTOR 133 1% .125W TF TC=0+-100	2M627	CRB14 OR CRB25
A4A9R35	1757-0289		1	RESISTOR 13.3K +-1% .125W TF TC=0+-100	2M627	CRB14 OR CRB25
A4A9R36	0698-3156		1	RESISTOR 14.7K 1% .125W TF TC=0+-100	2M627	CRB14 OR CRB25
A4A9R37	0698-3437		1	RESISTOR 133 1% .125W TF TC=0+-100	2M627	CRB14 OR CRB25
A4A9R38	0757-0442		1	RESISTOR 10K +-1% .125W TF TC=0+-100	2M627	CRB14 OR CRB25
A4A9R39	0757-0442		1	RESISTOR 10K +-1% .125W TF TC=D+-100	2M627	CRB14 OR CRB25
A4A9R40	1698-0085		1	RESISTOR 2.61K 1% .125W TF TC=D+-100	2M627	CRB14 OR CRB25
A4A9R41	0757-0438		1	RESISTOR 5.11K +-1% .125W TF TC=0+-100	2M627	CRB14 OR CRB25
A4A9R42	0757-0444		1	RESISTOR 12.1K +-1% .125W TF TC=0+-100	2M627	CRB14 OR CRB25
A4A9R43	0757-0424		1	RESISTOR 1.1K +-1% .125W TF TC=0+-100	2M627	CRB14 OR CRB25
A4A9R44	0757-0424		1	RESISTOR 1.1K +-1% .125W TF TC=0+-100	2M627	CRB14 OR CRB25
A4A9R45	0698-3450		1	RESISTOR 42.2K 1% .125W TF TC=0+-100	2M627	CRB14 OR CRB25
A4A9R46*	0757-0466		1	RESISTOR 110K +-1% .125W TF TC=0+-100	2M627	CRB14 OR CRB25
A4A9R47	0698-3457		1	RESISTOR 316K 1% .125W TF TC=D+-100	2M627	CRB14 OR CRB25
A4A9R48*	0698-3458		1	RESISTOR 348K 1% .125W TF TC=0+-100	2M627	CRB14 OR CRB25

**Indicates factory-selected value*

HP Part Number 85662-60187

A4A9 IF Control

Reference Designation	HP Part Number	CD	Qty	Description	Mfr Code	Mfr Part Number
A4A9R49	0698-3161	9	1	RESISTOR 38.31: 1% .125W TF TC=0+-100	2M627	CRB14 OR CRB25
A4A9R50*	0757-0462	3	1	RESISTOR 75K +-1% .125W TF TC=0+-100	2M627	CRB14 OR CRB25
A4A9R51	0757-0464	5	1	RESISTOR 90.9K +-1% .125W TF TC=0+-100	2M627	CRB14 OR CR825
A4A9R52*	0698-8960	6	1	RESISTOR 750K +-1% .125W TF TC=0+-100	2M627	CRB14 OR CR825
A4A9R53	0698-3449	6	1	RESISTOR 28.71: 1% .125W TF TC=0+-100	2M627	CRB14 OR CR825
A4A9R54	0757-0199	3	1	RESISTOR 21.5K +-1% .125W TF TC=0+-100	2M627	CRB14 OR CRB25
A4A9R55*	0757-0460	1	1	RESISTOR 61.9K +-1% .125W TF TC=0+-100	2M627	CR814 OR CRB25
A4A9R56	0757-0460	1	1	RESISTOR 61.9K +-1% .125W TF TC=0+-100	2M627	CRB14 OR CR825
A4A9R57*	0698-3460	1	1	RESISTOR 422K 1% .125W TF TC=0+-100	2M627	CRB14 OR CRB25
A4A9R58	0698-3450	9	1	RESISTOR 42.21: 1% .125W TF TC=0+-100	2M627	CRB14 OR CRB25
A4A9R59*	0698-8824	1	1	RESISTOR 562K +-1% .125W TF TC=0+-100	2M627	CRB14 OR CRB25
A4A9R60	2100-3103	6	1	RESISTOR-TRMR 10K 10% TKF SIDE-ADJ 17-TR	32997	3006P-DM3-103
A4A9R61	2100-3054	6	1	RESISTOR-TRMR 50K 10% TKF SIDE-ADJ 17-TR	32997	3006P-DM3-503
A4A9R62	2100-3162	7	1	RESISTOR-TRMR 200K 10% TKF SIDE-ADJ 17-T	32997	3006P-DM3-204
A4A9R63	0698-3437	2	1	RESISTOR 133 1% .125W TF TC=0+-100	2M627	CRB14 OR CRB25
A4A9R64	0757-0289	2	1	RESISTOR 13.3K +-1% .125W TF TC=0+-100	2M627	CRB14 OR CR825
A4A9R65	2100-3054	6	1	RESISTOR-TRMR 50K 10% TKF SIDE-ADJ 17-TR	32997	3006P-DM3-503
A4A9R66	2100-3103	6	1	RESISTOR-TRMR 10K 10% TKF SIDE-ADJ 17-TR	32997	3006P-DM3-103
A4A9R67	0698-0085	0	1	RESISTOR 2.61K 1% .125W TF TC=0+-100	2M627	CRB14 OR CR825
A4A9R68	0698-0085	0	1	RESISTOR 2.61K 1% .125W TF TC=0+-100	2M627	CRB14 OR CR825
A4A9R69	0698-3260	9	1	RESISTOR 464K 1% .125W TF TC=0+-100	2M627	CRB14 OR CR825
A4A9R70*	0698-8826	3	1	RESISTOR 825K +-1% .125W TF TC=0+-100	2M627	CR814 OR CRB25
A4A9R71	0757-0199	3	1	RESISTOR 21.5K +-1% .125W TF TC=0+-100	2M627	CRB14 OR CR825
A4A9R72*	0757-0467	8	1	RESISTOR 121K +-1% .125W TF TC=0+-100	2M627	CRB14 OR CRB25
A4A9R74*	0757-0463	4	1	RESISTOR 82.51: +-1% .125W TF TC=0+-100	2M627	CRB14 OR CRB25
A4A9R75	0698-3156	2	1	RESISTOR 14.7K 1% .125W TF TC=0+-100	2M627	CRB14 OR CRB25
A4A9R76	0757-0465	6	1	RESISTOR 100K +-1% .125W TF TC=0+-100	2M627	CRB14 OR CRB25
A4A9R77	0757-0442	9	1	RESISTOR 10K +-1% .125W TF TC=0+-100	2M627	CRB14 OR CRB25
A4A9TP1	1251-0600	0	1	CONNECTOR-SGL CONT PIN 1.14-MM-BSC-SZ SQ	83486	928-196-004140
A4A9TP2	1251-0600	0	1	CONNECTOR-SGL CONT PIN 1.14-MM-BSC-SZ SD	83486	928-196-004140
A4A9U1	1826-0990	0	1	IC OP AMP GP DUAL 8-DIP-C PKG	01295	MC1458JG
A4A9U2	1820-1418	7	1	IC DCDR TTL LS BCD-TO-DEC 4-TO-10-LINE 4	01295	SN74LS42N
A4A9U3	1858-0076	0	1	TRANSISTOR ARRAY 14-PIN PLSTC TO-116	04713	MPQ2907P
A4A9U4	1858-0076	0	1	TRANSISTOR ARRAY 14-PIN PLSTC TO-116	04713	MPQ2907P
A4A9U5	1810-0280	3	1	NETWORK-RES 10-SIP 10.0K OHM X 9	11236	750-101
A4A9U6	1820-0468	5	1	IC DCDR TTL BCD-TO-DEC 4-TO-10-LINE 4-IN	01295	SN7445N
A4A9U7	1820-1195	7	1	IC FF TTL LS D-TYPE POS-EDGE-TRIG CDM CL	01295	SN74LS175N
A4A9U8	1858-0077	1	1	TRANSISTOR ARRAY 14-PIN PLSTC TO-116	04713	MPQ2222P
A4A9U9	1820-0471	3	1	IC INV TTL HEX 1-INP	01295	SN7406N
A4A9U10	1820-1196	3	1	IC FF TTL LS D-TYPE POS-EDGE-TRIG COM CL	01295	SN74LS174N
A4A9U11	1820-0468	5	1	IC DCDR TTL BCD-TO-DEC 4-TO-10-LINE 4-IN	01295	SN7445N
A4A9U12	1810-0280	3	1	NETWORK-RES 10-SIP 10.0K OHM X 9	11236	750-101
A4A9U13	1820-1216	3	1	IC DCDR TTL LS 3-TO-8-LINE 3-INP	01295	SN74LS138N
A4A9U14	1820-1196	3	1	IC FF TTL LS D-TYPE POS-EDGE-TRIG COM CL	01295	SN74LS174N
A4A9U15	1820-0471	3	1	IC INV TTL HEX 1-INP	01295	SN7406N
A4A9U16	1858-0076	0	1	TRANSISTOR ARRAY 14-PIN PLSTC TO-116	04713	MPQ2907P
A4A9U17	1820-1196	3	1	IC FF TTL LS D-TYPE POS-EDGE-TRIG COM CL	01295	SN74LS174N

**Indicates factory-selected value*

HP Part Number 85662-60187

A4A9 IF Control

Reference Designatio	HP Part Number	C D	Qty	Description	Mfr Code	Mfr Part Number
A4A9U18	1820-1196	8	1	IC FF TTL LS D-TYPE POS-EDGE-TRIG COM CL	01295	SN74LS174N
A4A9U19	1820-0471	0	1	IC INV TTL HEX I-INP	0129t	SN7406N
A4A9U20	1820-1196	8	1	IC FF TTL LS D-TYPE PDS-EDGE-TRIG COM CL	01295	SN74LS174N
A4A9U21	1820-2024	3	1	IC DRVR TTL LS LINE DRVR OCTL	01295	SN74LS244N
A4A9U22	1810-0280	8	1	NETWORK-RES 10-SIP 10.0K OHM X 9	11236	750-101
A4A9VR1	1902-3203	6	1	DIODE-ZNR 14.7V 5% DO-35 PD=.4W	04713	
A4A9VR2	1902-0041		1	DIODE-ZNR 5.11V 5% DO-35 PD=.4W	0471:	
A4A9W1	3159-0005	0	1	RESISTOR-ZERO OHMS 22 AWG LEAD DIA	5521(	L-2007-1
A4A9W4	3159-0005	0	1	RESISTOR-ZERO OHMS 22 AWG LEAD DIA	5521(	L-2007-1

Analyzer Repair Inc.

**Indicates factory-selected value*

HP Part Number 85662-602-I 1

A4A9 IF Control

Reference Designation	HP Part Number	C D	Qty	Description	Mfr Code	Mfr Part Number
A4A9	85662-60211	5	1	BOARD ASSEMBLY, IF CONTROL (OPTION 462) (SERIAL PREFIXES: 2813A-2816A)	28480	85662-60211
A4A9C1	0160-4832	4	1	CAPACITOR-FXD .01UF +-10% 100VDC CER	04222	SA101C103KAAH
A4A9C3	0160-4832	4	1	CAPACITOR-FXD .01UF +-10% 100VDC CER	04222	SA101C103KAAH
A4A9C4	0160-4832	4	1	CAPACITOR-FXD .01UF +-10% 100VDC CER	04222	SA101C103KAAH
A4A9C5	0160-4832	4	1	CAPACITOR-FXD .01UF +-10% 100VDC CER	04222	SA101C103KAAH
A4A9C6	0160-4832	4	1	CAPACITOR-FXD .01UF +-10% 100VDC CER	04222	SA101C103KAAH
A4A9C7	0160-4832	4	1	CAPACITOR-FXD .01UF +-10% 100VDC CER	04222	SA101C103KAAH
A4A9C8	0160-4832	4	1	CAPACITOR-FXD .01UF +-10% 100VDC CER	04222	SA101C103KAAH
A4A9C9	0160-4832	4	1	CAPACITOR-FXD .01UF +-10% 100VDC CER	04222	SA101C103KAAH
A4A9C10	0160-4832	4	1	CAPACITOR-FXD .01UF +-10% 100VDC CER	04222	SA101C103KAAH
A4A9C11	0160-4832	4	1	CAPACITOR-FXD .01UF +-10% 100VDC CER	04222	SA101C103KAAH
A4A9C12	0160-4832	4	1	CAPACITOR-FXD .01UF +-10% 100VDC CER	04222	SA101C103KAAH
A4A9C13	0160-4832	4	1	CAPACITOR-FXD .01UF +-10% 100VDC CER	04222	SA101C103KAAH
A4A9C14	0160-4832	4	1	CAPACITOR-FXD .01UF +-10% 100VDC CER	04222	SA101C103KAAH
A4A9C15	0160-4822	2	1	CAPACITOR-FXD 1000PF +-5% 100VDC CER 0+-	04222	SA201A102JAAH
A4A9C16	0160-4822	2	1	CAPACITOR-FXD 1000PF +-5% 100VDC CER 0+-	04222	SA201A102JAAH
A4A9C17	0160-4822	2	1	CAPACITOR-FXD 1000PF +-5% 100VDC CER 0+-	04222	SA201A102JAAH
A4A9C18	0160-4822	2	1	CAPACITOR-FXD 1000PF +-5% 100VDC CER 0+-	04222	SA201A102JAAH
A4A9C19	0160-4832	4	1	CAPACITOR-FXD .01UF +-10% 100VDC CER	04222	SA101C103KAAH
A4A9C20	0180-0197	8	1	CAPACITOR-FXD 2.2UF+-10% 20VDC TA	56289	150D225X9020A2-DYS
A4A9C21	0180-0197	8	1	CAPACITOR-FXD 2.2UF+-10% 20VDC TA	56289	150D225X9020A2-DYS
A4A9C22	0180-0197	8	1	CAPACITOR-FXD 2.2UF+-10% 20VDC TA	56289	150D225X9020A2-DYS
A4A9CR2	1901-0050	3	1	DIODE-SWITCHING 80V 200MA 2NS DO-35	9N171	1N4150
A4A9CR3	1901-0050	3	1	DIODE-SWITCHING 80V 200MA 2NS DO-35	9N171	1N4150
A4A9CR4	1901-0050	3	1	DIODE-SWITCHING 80V 200MA 2NS DO-35	9N171	1N4150
A4A9CR5	1901-0050	3	1	DIODE-SWITCHING 80V 200MA 2NS DO-35	9N171	1N4150
A4A9CR6	1901-0050	3	1	DIODE-SWITCHING 80V 200MA 2NS DO-35	9N171	1N4150
A4A9CR7	1901-0050	3	1	DIODE-SWITCHING 80V 200MA 2NS DO-35	9N171	1N4150
A4A9CR8	1901-0050	3	1	DIODE-SWITCHING 80V 200MA 2NS DO-35	9N171	1N4150
A4A9CR9	1901-0050	3	1	DIODE-SWITCHING 80V 200MA 2NS DO-35	9N171	1N4150
A4A9CR10	1901-0050	3	1	DIODE-SWITCHING 80V 200MA 2NS DO-35	9N171	1N4150
A4A9CR11	1901-0050	3	1	DIODE-SWITCHING 80V 200MA 2NS DO-35	9N171	1N4150
A4A9CR12	1901-0050	3	1	DIODE-SWITCHING 80V 200MA 2NS DO-35	9N171	1N4150
A4A9CR13	1901-0050	3	1	DIODE-SWITCHING 80V 200MA 2NS DO-35	9N171	1N4150
A4A9CR14	1901-0050	3	1	DIODE-SWITCHING 80V 200MA 2NS DO-35	9N171	1N4150
A4A9CR15	1901-0050	3	1	DIODE-SWITCHING 80V 200MA 2NS DO-35	9N171	1N4150
A4A9CR16	1901-0050	3	1	DIODE-SWITCHING 80V 200MA 2NS DO-35	9N171	1N4150
A4A9CR17	1901-0050	3	1	DIODE-SWITCHING BOV 200MA 2NS DO-35	9N171	1N4150
A4A9CR18	1901-0050	3	1	DIODE-SWITCHING 80V 200MA 2NS DO-35	9N171	1N4150
A4A9CR19	1901-0050	3	1	DIODE-SWITCHING 80V 200MA 2NS DO-35	9N171	1N4150
A4A9CR20	1901-0050	3	1	DIODE-SWITCHING 80V 200MA 2NS DO-35	9N171	1N4150
A4A9CR21	1901-0050	3	1	DIODE-SWITCHING 80V 200MA 2NS DO-35	9N171	IN4150
A4A9CR22	1901-0050	3	1	DIODE-SWITCHING 80V 200MA 2NS DO-35	9N171	1N4150
A4A9CR23	1901-0050	3	1	DIODE-SWITCHING 80V 200MA 2NS DO-35	9N171	1N4150
A4A9CR24	1901-0050	3	1	DIODE-SWITCHING 80V 200MA 2NS DO-35	9N171	1N4150
A4A9CR25	1901-0050	3	1	DIODE-SWITCHING 80V 200MA 2NS DO-35	9N171	1N4150

**Indicates factory-selected value*

HP Part Number 85662-60211
A4A9 IF Control

Reference Designatio	HP Part Number	C D	Qty	Description	Mfr Code	Mfr Part Number
A4A9CR26	1901-0050		1	DIODE-SWITCHING 80V 200MA 2NS DO-35	9N17	1N4150
A4A9CR27	1901-0050		1	DIODE-SWITCHING 80V 200MA 2NS DO-35	9N17	1N4150
A4A9CR28	1901-0050		1	DIODE-SWITCHING 80V 200MA 2NS DO-35	9N17	1N4150
A4A9CR29	1901-0050		1	DIODE-SWITCHING 80V 200MA 2NS DO-35	9N17	1N4150
A4A9CR30	1901-0050		1	DIODE-SWITCHING 80V 200MA 2NS DO-35	9N17	1N4150
A4A9R3*	0757-0289		1	RESISTOR 13.3K +-1% .125W TF TC=0+-100	1970	SFR25H
A4A9R6*	0757-0463		1	RESISTOR 82.51: +-1% .125W TF TC=0+-100	1970	SFR25H
A4A9R7*	0698-3456		1	RESISTOR 287K 1% .125W TF TC=0+-100	1970.	SFR25H
A4A9R10*	0757-0458		1	RESISTOR 51.1K +-1% .125W TF TC=0+-100	1970:	SFR25H
A4A9R11*	0757-0288		1	RESISTOR 9.09K +-1% .125W TF TC=0+-100	1970:	SFR25H
A4A9R14	0757-0442		1	RESISTOR 10K +-1% .125W TF TC=0+-100	1970:	SFR25H
A4A9R15	0698-0082		1	RESISTOR 464 1% .125W TF TC=0+-100	1970:	SFR25H
A4A9R16	0757-0424		1	RESISTOR 1.1K +-1% .125W TF TC=0+-100	1970:	SFR25H
A4A9R17	0757-0442		1	RESISTOR 10K +-1% .125W TF TC=0+-100	19701	SFR25H
A4A9R18	0757-0317		1	RESISTOR 1.33K +-1% .125W TF TC=0+-100	19701	SFR25H
A4A9R19	0757-0442		1	RESISTOR 10K +-1% .125W TF TC=0+-100	19701	SFR25H
A4A9R23	3757-0419		1	RESISTOR 681 +-1% .125W TF TC=0+-100	19701	SFR25H
A4A9R24	0757-0280		1	RESISTOR 1K +-1% .125W TF TC=0+-100	19701	SFR25H
A4A9R25	1757-0438		1	RESISTOR 5.11K +-1% .125W TF TC=0+-100	19701	SFR25H
A4A9R26	0757-0428		1	RESISTOR 1.62K +-1% .125W TF TC=0+-100	19701	SFR25H
A4A9R29	1698-0085		1	RESISTOR 2.61K 1% .125W TF TC=0+-100	19701	SFR25H
A4A9R30*	1757-0458		1	RESISTOR 51.1K +-1% .125W TF TC=0+-100	19701	SFR25H
A4A9R32	0757-0289		1	RESISTOR 13.3K +-1% .125W TF TC=0+-100	19701	SFR25H
A4A9R33	0698-3156		1	RESISTOR 14.7K 1% .125W TF TC=0+-100	19701	SFR25H
A4A9R34	0698-3437		1	RESISTOR 133 1% .125W TF TC=0+-100	19701	SFR25H
A4A9R35	0757-0289		1	RESISTOR 13.3K +-1% .125W TF TC=0+-100	19701	SFR25H
A4A9R36	0698-3156		1	RESISTOR 14.7K 1% .125W TF TC=0+-100	19701	SFR25H
A4A9R37	1698-3437		1	RESISTOR 133 1% .125W TF TC=0+-100	19701	SFR25H
A4A9R38	0757-0442		1	RESISTOR 10K +-1% .125W TF TC=0+-100	19701	SFR25H
A4A9R39	0757-0442		1	RESISTOR 10K +-1% .125W TF TC=0+-100	19701	SFR25H
A4A9R40	0698-0085		1	RESISTOR 2.61K 1% .125W TF TC=0+-100	19701	SFR25H
A4A9R41	1757-0438		1	RESISTOR 5.11K +-1% .125W TF TC=0+-100	19701	SFR25H
A4A9R42	0757-0444		1	RESISTOR 12.1K +-1% .125W TF TC=0+-100	19701	SFR25H
A4A9R43	0757-0317		1	RESISTOR 1.33K +-1% .125W TF TC=0+-100	19701	SFR25H
A4A9R44	0757-0317		1	RESISTOR 1.33K +-1% .125W TF TC=0+-100	19701	SFR25H
A4A9R45	0698-3450		1	RESISTOR 42.2K 1% .125W TF TC=0+-100	19701	SFR25H
A4A9R46*	757-0466		1	RESISTOR 110K +-1% .125W TF TC=0+-100	19701	SFR25H
A4A9R47	698-3457		1	RESISTOR 316K 1% .125W TF TC=0+-100	19701	SFR25H
A4A9R48*	698-3458		1	RESISTOR 348K 1% .125W TF TC=0+-100	19701	SFR25H
A4A9R49	698-3161		1	RESISTOR 38.31: 1% .125W TF TC=0+-100	19701	SFR25H
A4A9R50*	757-0462		1	RESISTOR 75K +-1% .125W TF TC=0+-100	19701	SFR25H
A4A9R51	757-0464		1	RESISTOR 90.9K +-1% .125W TF TC=0+-100	19701	SFR25H
A4A9R52*	698-8960		1	RESISTDR 750K +-1% .125W TF TC=0+-100	19701	SFR25H
A4A9R53	698-3449		1	RESISTOR 28.7K 1% .125W TF TC=0+-100	19701	SFR25H
A4A9R54	757-0199		1	RESISTOR 21.5K +-1% .125W TF TC=0+-100	19701	SFR25H
A4A9R55*	757-0460		1	RESISTOR 61.9K +-1% .125W TF TC=0+-100	19701	SFR25H
A4A9R56	757-0460		1	RESISTOR 61.9K +-1% .125W TF TC=0+-100	19701	SFR25H
A4A9R57*	1698-3460		1	RESISTOR 422K 1% .125W TF TC=0+-100	19701	SFR25H

Indicates factory-selected value

HP Part Number 85662-60211

A4A9 IF Control

Reference Designatior	HP Part Number	C D	Qty	Description	Mfr Code	Mfr Part Number
A4A9R58	0698-3450	9	1	RESISTOR 42.21: 1% .125W TF TC=0+-100	19701	SFR25H
A4A9R59*	0698-8824	1	1	RESISTOR 562K +-1% .125W TF TC=0+-100	19701	SFR25H
A4A9R60	2100-3103	6	1	RESISTOR-TRMR 10K 10% TKF SIDE-ADJ 17-TF	73138	89PR10K
A4A9R61	2100-3054	6	1	RESISTOR-TRMR 50K 10% TKF SIDE-ADJ 17-TF	73138	89PR50K
A4A9R62	2100-3162	7	1	RESISTOR-TRMR 200K 10% TKF SIDE-ADJ 17-1	73138	89PR200K
A4A9R63	0698-3437	2	1	RESISTOR 133 1% .125W TF TC=0+-100	19701	SFR25H
A4A9R64	0757-0289	2	1	RESISTOR 13.3K +-1% .125W TF TC=0+-100	19701	SFR25H
A4A9R65	2100-3054	6	1	RESISTOR-TRMR 50K 10% TKF SIDE-ADJ 17-TF	73136	89PR50K
A4A9R66	2100-3103	6	1	RESISTOR-TRMR 10K 10% TKF SIDE-ADJ 17-TF	73136	89PR10K
A4A9R67	0698-0085	0	1	RESISTOR 2.61K 1% .125W TF TC=0+-100	19701	SFR25H
A4A9R68	0698-0085	0	1	RESISTOR 2.61K 1% .125W TF TC=0+-100	19701	SFR25H
A4A9R69	0698-3260	9	1	RESISTOR 464K 1% .125W TF TC=0+-100	19701	SFR25H
A4A9R70*	0698-8826	3	1	RESISTOR 825K +-1% .125W TF TC=0+-100	19701	SFR25H
A4A9R71	0757-0199	3	1	RESISTOR 21.5K +-1% .125W TF TC=0+-100	19701	SFR25H
A4A9R72*	0757-0467	8	1	RESISTOR 121K +-1% .125W TF TC=0+-100	19701	SFR25H
A4A9R74*	0757-0463	4	1	RESISTOR 82.51: +-1% .125W TF TC=0+-100	19701	SFR25H
A4A9R75	0698-3156	2	1	RESISTOR 14.7K 1% .125W TF TC=0+-100	19701	SFR25H
A4A9R76	0757-0465	6	1	RESISTOR 100K +-1% .125W TF TC=0+-100	19701	SFR25H
A4A9R77	0757-0442	9	1	RESISTOR 10K +-1% .125W TF TC=0+-100	19701	SFR25H
A4A9R78	0757-0280	3	1	RESISTOR 1K +-1% .125W TF TC=0+-100	19701	SFR25H
A4A9R79	0757-0280	3	1	RESISTOR 1K +-1% .125W TF TC=0+-100	19701	SFR25H
A4A9R80	0757-0280	3	1	RESISTOR 1K +-1% .125W TF TC=0+-100	19701	SFR25H
A4A9R81	9757-0280	3	1	RESISTOR 1K +-1% .125W TF TC=0+-100	19701	SFR25H
A4A9R82	1757-0317		1	RESISTOR 1.33K +-1% .125W TF TC=0+-100	19701	SFR25H
A4A9TP1	1251-0600	)	1	CONNECTOR-SGL CONT PIN 1.14-MM-BSC-SZ SQ	27264	16-06-0034
A4A9TP2	1251-0600	)	1	CONNECTOR-SGL CONT PIN 1.14-MM-BSC-SZ SQ	27264	16-06-0034
A4A9U1	1826-0990	)	1	IC OP AMP GP DUAL 8-DIP-C PKG	04713	MC1458U
A4A9U2	1820-0468		1	IC DCDR TTL BCD-TO-DEC 4-TO-10-LINE 4-IN	01295	SN7445N
A4A9U3	1858-0076	)	1	TRANSISTOR ARRAY 14-PIN PLSTC TO-116	04713	MPQ2907P
A4A9U4	1858-0076	)	1	TRANSISTOR ARRAY 14-PIN PLSTC TO-116	04713	MPQ2907P
A4A9U5	1810-0277		1	NETWORK-RES 10-SIP 2.2K OHM X 9	91637	MSP10A01
A4A9U6	1820-0468		1	IC DCDR TTL BCD-TO-DEC 4-TO-10-LINE 4-IN	01295	SN7445N
A4A9U7	1820-1195		1	IC FF TTL LS D-TYPE POS-EDGE-TRIG COM CL	01295	SN74LS175N
A4A9U8	1858-0077		1	TRANSISTOR ARRAY 14-PIN PLSTC TO-116	04713	MPQ2222P
A4A9U9	1820-0471	)	1	IC INV TTL HEX 1-INP	01295	SN7406N
A4A9U10	1820-1196		1	IC FF TTL LS D-TYPE POS-EDGE-TRIG COM CL	01295	SN74LS174N
A4A9U11	1820-0468		1	IC DCDR TTL BCD-TO-DEC 4-TO-10-LINE 4-IN	01295	SN7445N
A4A9U12	1810-0280	I	1	NETWORK-RES 10-SIP 10.0K OHM X 9	91637	MSP10A01
A4A9U13	1820-1216		1	IC DCDR TTL LS 3-TO-8-LINE 3-INP	01295	SN74LS138N
A4A9U14	1820-1196		1	IC FF TTL LS D-TYPE POS-EDGE-TRIG COM CL	01295	SN74LS174N
A4A9U15	1820-0471		1	IC INV TTL HEX 1-INP	01295	SN7406N
A4A9U16	1858-0076	)	1	TRANSISTOR ARRAY 14-PIN PLSTC TO-116	04713	MPQ2907P
A4A9U17	1820-1196		1	IC FF TTL LS D-TYPE POS-EDGE-TRIG COM CL	01295	SN74LS174N
A4A9U18	1820-1196		1	IC FF TTL LS D-TYPE POS-EDGE-TRIG COM CL	01295	SN74LS174N
A4A9U19	1820-0471		1	IC INV TTL HEX 1-INP	01295	SN7406N
A4A9U20	1820-1196		1	IC FF TTL LS D-TYPE POS-EDGE-TRIG COM CL	01295	SN74LS174N
A4A9U21	1820-2024		1	IC DRVR TTL LS LINE DRVR DCTL	01295	SN74LS244N

**Indicates factory-selected value*

HP Part Number 85662-60211

A4A9 IF Control

Reference Designatior	HP Part Number	C D	Qty	Description	Mfr Code	Mfr Part Number
A4A9U22	1810-0280		1	NETWORK-RES IO-SIP 10.0K OHM X 9	9163'	MSP10A01
A4A9VR1	1902-3203		1	DIODE-ZNR 14.7V 5% DO-35 PD=.4W	0471:	
A4A9VR2	1902-0041		1	DIODE-ZNR 5.11V 5% DO-35 PD=.4W	0471:	
A4A9W1	8159-0005		1	RESISTOR-ZERO OHMS 22 AWG LEAD DIA	5521(	L-2007-1
A4A9W4	9159-0005		1	RESISTOR-ZERO OHMS 22 AWG LEAD DIA	5521(	L-2007-1
A4A9W8	5159-0005		1	RESISTOR-ZERO OHMS 22 AWG LEAD DIA	55211	L-2007-1
A4A9W9	3159-0005		1	RESISTOR-ZERO OHMS 22 AWG LEAD DIA	5521(	L-2007-1
A4A9W10	3159-0005		1	RESISTOR-ZERO OHMS 22 AWG LEAD DIA	5521(	L-2007-1
A4A9W11	3159-0005		1	RESISTOR-ZERO OHMS 22 AWG LEAD DIA	5521(	L-2007-1

Analyzer Repair Inc.

**Indicates factoy-selected value*

HP Part Number 85662-60223

A4A9 IF Control

Reference Designation	HP Part Number	C D	Qty	Description	Mfr Code	Mfr Part Number
A4A9	85662-60223	9	1	BOARD ASSEMBLY, IF CONTROL (OPTION 462) (SERIAL PREFIX: 2848A)	28480	85662-60223
A4A9C1	0160-4832	4	1	CAPACITOR-FXD .01UF +-10% 100VDC CER	04222	SA101C103KAAH
A4A9C3	0160-4832	4	1	CAPACITOR-FXD .01UF +-10% 100VDC CER	04222	SA101C103KAAH
A4A9C4	0160-4832	4	1	CAPACITOR-FXD .01UF +-10% 100VDC CER	04222	SA101C103KAAH
A4A9C5	0160-4832	4	1	CAPACITOR-FXD .01UF +-10% 100VDC CER	04222	SA101C103KAAH
A4A9C6	0160-4832	4	1	CAPACITOR-FXD .01UF +-10% 100VDC CER	04222	SA101C103KAAH
A4A9C7	0160-4832	4	1	CAPACITOR-FXD .01UF +-10% 100VDC CER	04222	SA101C103KAAH
A4A9C8	0160-4832	4	1	CAPACITOR-FXD .01UF +-10% 100VDC CER	04222	SA101C103KAAH
A4A9C9	0160-4832	4	1	CAPACITOR-FXD .01UF +-10% 100VDC CER	04222	SA101C103KAAH
A4A9C10	0160-4832	4	1	CAPACITOR-FXD .01UF +-10% 100VDC CER	04222	SA101C103KAAH
A4A9C11	0160-4832	4	1	CAPACITOR-FXD .01UF +-10% 100VDC CER	04222	SA101C103KAAH
A4A9C12	0160-4832	4	1	CAPACITOR-FXD .01UF +-10% 100VDC CER	04222	SA101C103KAAH
A4A9C13	0160-4832	4	1	CAPACITOR-FXD .01UF +-10% 100VDC CER	04222	SA101C103KAAH
A4A9C14	0160-4832	4	1	CAPACITOR-FXD .01UF +-10% 100VDC CER	04222	SA101C103KAAH
A4A9C15	0160-4822	2	1	CAPACITOR-FXD 1000PF +-5% 100VDC CER 0+-	04222	SA201A102JAAH
A4A9C16	0160-4822	2	1	CAPACITOR-FXD 1000PF +-5% 100VDC CER 0+-	04222	SA201A102JAAH
A4A9C17	0160-4822	2	1	CAPACITOR-FXD 1000PF +-5% 100VDC CER 0+-	04222	SA201A102JAAH
A4A9C18	0160-4822	2	1	CAPACITOR-FXD 1000PF +-5% 100VDC CER 0+-	04222	SA201A102JAAH
A4A9C19	0160-4832	4	1	CAPACITOR-FXD .01UF +-10% 100VDC CER	04222	SA101C103KAAH
A4A9C20	0180-0197	8	1	CAPACITOR-FXD 2.2UF+-10% 20VDC TA	56289	150D225X9020A2-DYS
A4A9C21	0180-0197	8	1	CAPACITOR-FXD 2.2UF+-10% 20VDC TA	56289	150D225X9020A2-DYS
A4A9C22	0180-0197	8	1	CAPACITOR-FXO 2.2UF+-10% 20VDC TA	56289	150D225X9020A2-DYS
A4A9CR2	1901-0050	3	1	DIODE-SWITCHING 80V 200MA 2NS DO-35	9N171	1N4150
A4A9CR3	1901-0050	3	1	DIODE-SWITCHING BOV 200MA 2NS DO-35	9N171	1N4150
A4A9CR4	1901-0050	3	1	DIODE-SWITCHING 80V 200MA 2NS DO-35	9N171	1N4150
A4A9CR5	1901-0050	3	1	DIODE-SWITCHING 80V 200MA 2NS DO-35	9N171	1N4150
A4A9CR6	1901-0050	3	1	DIODE-SWITCHING 80V 20DMA 2NS DO-35	9N171	1N4150
A4A9CR7	1901-0050	3	1	DIODE-SWITCHING 80V 200MA 2NS DO-35	9N171	1N4150
A4A9CR8	1901-0050	3	1	DIODE-SWITCHING 80V 200MA 2NS DO-35	9N171	1N4150
A4A9CR9	1901-0050	3	1	DIODE-SWITCHING 80V 200MA 2NS DO-35	9N171	1N4150
A4A9CR10	1901-0050	3	1	DIODE-SWITCHING 80V 200MA 2NS DO-35	9N171	1N4150
A4A9CR11	1901-0050	3	1	DIODE-SWITCHING 80V 200MA 2NS DO-35	9N171	1N4150
A4A9CR12	1901-0050	3	1	DIODE-SWITCHING BOV 200MA 2NS DO-35	9N171	1N4150
A4A9CR13	1901-0050	3	1	DIODE-SWITCHING 80V 200MA 2NS DO-35	9N171	1N4150
A4A9CR14	1901-0050	3	1	DIODE-SWITCHING 80V 200MA 2NS DO-35	9N171	1N4150
A4A9CR15	1901-0050	3	1	DIODE-SWITCHING 80V 200MA 2NS DO-35	9N171	1N4150
A4A9CR16	1901-0050	3	1	DIODE-SWITCHING 80V 200MA 2NS DO-35	9N171	1N4150
A4A9CR17	1901-0050	3	1	DIODE-SWITCHING 80V 200MA 2NS DO-35	9N171	1N4150
A4A9CR18	1901-0050	3	1	DIODE-SWITCHING 80V 200MA 2NS DO-35	9N171	1N4150
A4A9CR19	1901-0050	3	1	DIODE-SWITCHING BOV 200MA 2NS DO-35	9N171	1N4150
A4A9CR20	1901-0050	3	1	DIODE-SWITCHING 80V 200MA 2NS DO-35	9N171	1N4150
A4A9CR21	1901-0050	3	1	DIODE-SWITCHING 80V 200MA 2NS DO-35	9N171	1N4150
A4A9CR22	1901-0050	3	1	DIODE-SWITCHING 80V 200MA 2NS DO-35	9N171	1N4150
A4A9CR23	1901-0050	3	1	DIODE-SWITCHING 80V 200MA 2NS DO-35	9N171	1N4150
A4A9CR24	1901-0050	3	1	DIODE-SWITCHING 80V 200MA 2NS DO-35	9N171	1N4150
A4A9CR25	1901-0050	3	1	DIODE-SWITCHING 80V 200MA 2NS DO-35	9N171	1N4150

**Indicates factory-selected value*

HP Part Number 85662-60223

A4A9 IF Control

Reference Designation	HP Part Number	CD	Qty	Description	Mfr Code	Mfr Part Number
A4A9CR26	1901-0050	3	1	DIODE-SWITCHING 80V 200MA 2NS DO-35	9N171	1N4150
A4A9CR27	1901-0050	3	1	DIODE-SWITCHING 80V 200MA 2NS DO-35	9N171	1N4150
A4A9CR28	1901-0050	3	1	DIODE-SWITCHING 80V 200MA 2NS DO-35	9N171	IN4150
A4A9CR29	1901-0050	3	1	DIODE-SWITCHING 80V 200MA 2NS DO-35	9N171	1N4150
A4A9CR30	1901-0050	3	1	DIODE-SWITCHING 80V 200MA 2NS DO-35	9N171	1N4150
A4A9MP1				NOT ASSIGNED		
A4A9MP2	0360-0124	3	1	CONNECTOR-SGL CONT PIN .04-IN-BSC-SZ RND	97300	
A4A9MP3	0360-0124	3	1	CONNECTOR-SGL CONT PIN .04-IN-BSC-SZ RND	97300	
A4A9MP4	0360-0124	3	1	CONNECTOR-SGL CDNT PIN .04-IN-BSC-SZ RND	97300	
A4A9MP5	0360-0124	3	1	CONNECTOR-SGL CDNT PIN .04-IN-BSC-SZ RND	97300	
A4A9MP6	0360-0124	3	1	CONNECTOR-SGL CONT PIN .04-IN-BSC-SZ RND	97300	
A4A9MP7	0360-0124	3	1	CONNECTOR-SGL CONT PIN .04-IN-BSC-SZ RND	97300	
A4A9MP8	0360-0124	3	1	CONNECTOR-SGL CONT PIN .04-IN-BSC-SZ RND	97300	
A4A9MP9	0360-0124	3	1	CONNECTOR-SGL CONT PIN .04-IN-BSC-SZ RND	97300	
A4A9MP10	0360-0124	3	1	CONNECTOR-SGL CONT PIN .04-IN-BSC-SZ RND	97300	
A4A9MP11	0360-0124	3	1	CONNECTOR-SGL CDNT PIN .04-IN-BSC-SZ RND	97300	
A4A9R3*	0757-0438	3	1	RESISTOR 5.11K +-1% .125W TF TC=0+-100	19701	SFR25H
A4A9R6*	0698-3449	6	1	RESISTOR 28.71: 1% .125W TF TC=0+-100	19701	SFR25H
A4A9R7*	0757-0460	1	1	RESISTOR 61.9K +-1% .125W TF TC=0+-100	19701	SFR25H
A4A9R10*	0757-0289	2	1	RESISTOR 13.3K +-1% .125W TF TC=0+-100	19701	SFR25H
A4A9R11*	0698-3152	8	1	RESISTOR 3.481: 1% .125W TF TC=0+-100	19701	SFR25H
A4A9R14	0757-0442	9	1	RESISTOR 10K +-1% .125W TF TC=0+-100	19701	SFR25H
A4A9R15	0698-0082	7	1	RESISTOR 464 1% .125W TF TC=0+-100	19701	SFR25H
A4A9R16	0757-0424	7	1	RESISTOR 1.1K +-1% .125W TF TC=0+-100	19701	SFR25H
A4A9R17	0757-0442	9	1	RESISTOR 10K +-1% .125W TF TC=0+-100	19701	SFR25H
A4A9R18	0757-0317	7	1	RESISTOR 1.33K +-1% .125W TF TC=0+-100	19701	SFR25H
A4A9R19	0757-0442	9	1	RESISTOR 10K +-1% .125W TF TC=0+-100	19701	SFR25H
A4A9R23	0757-0419	0	1	RESISTOR 681 +-1% .125W TF TC=0+-100	19701	SFR25H
A4A9R24	0757-0280	3	1	RESISTOR 1K +-1% .125W TF TC=0+-100	19701	SFR25H
A4A9R25	0757-0438	3	1	RESISTOR 5.11K +-1% .125W TF TC=0+-100	19701	SFR25H
A4A9R26	0757-0428	1	1	RESISTOR 1.62K +-1% .125W TF TC=0+-100	19701	SFR25H
A4A9R29	0698-0085	0	1	RESISTOR 2.61K .125W TF TC=0+-100	19701	SFR25H
A4A9R30	0757-0458	7	1	RESISTOR 51.1K +-1% .125W TF TC=0+-100	19701	SFR25H
A4A9R32	0757-0289	2	1	RESISTOR 13.3K +-1% .125W TF TC=0+-100	19701	SFR25H
A4A9R33	0698-3156	2	1	RESISTOR 14.7K 1% .125W TF TC=0+-100	19701	SFR25H
A4A9R34	0698-3437	2	1	RESISTOR 133 1% .125W TF TC=0+-100	19701	SFR25H
A4A9R35	0757-0289	2	1	RESISTOR 13.3K +-1% .125W TF TC=0+-100	19701	SFR25H
A4A9R36	0698-3156	2	1	RESISTOR 14.7K 1% .125W TF TC=0+-100	19701	SFR25H
A4A9R37	0698-3437	2	1	RESISTOR 133 1% .125W TF TC=0+-100	19701	SFR25H
A4A9R38	0757-0442	9	1	RESISTOR 10K +-1% .125W TF TC=0+-100	19701	SFR25H
A4A9R39	0757-0442	9	1	RESISTOR 10K +-1% .125W TF TC=0+-100	19701	SFR25H
A4A9R40	0698-0085	0	1	RESISTOR 2.61K 1% .125W TF TC=0+-100	19701	SFR25H
A4A9R41	0757-0438	3	1	RESISTOR 5.11K +-1% .125W TF TC=0+-100	19701	SFR25H
A4A9R42	0757-0444	1	1	RESISTOR 12.1K +-1% .125W TF TC=0+-100	19701	SFR25H
A4A9R43	0757-0317	7	1	RESISTOR 1.33K +-1% .125W TF TC=0+-100	19701	SFR25H
A4A9R44	0757-0317	7	1	RESISTOR 1.33K +-1% .125W TF TC=0+-100	19701	SFR25H
A4A9R45	0698-3450	9	1	RESISTOR 42.21: 1% .125W TF TC=0+-100	19701	SFR25H

**Indicates facto y-selected value*

HP Part Number 85662-60223

A4A9 IF Control

Reference Designation	HP Part Number	C. D	Qty	Description	Mfr Code	Mfr Part Number
A4A9R46*	0757-0466	7	1	RESISTOR 110K +-1% .125W TF TC=0+-100	19701	SFR25H
A4A9R47	0698-3457	6	1	RESISTOR 316K 1% .125W TF TC=0+-100	19701	SFR25H
A4A9R48*	0698-3458	7	1	RESISTOR 348K 1% .125W TF TC=0+-100	19701	SFR25H
A4A9R49	0698-3161	0	1	RESISTOR 38.31: 1% .125W TF TC=0+-100	19701	SFR25H
A4A9R50*	0757-0462	3	1	RESISTOR 75K +-1% .125W TF TC=0+-100	19701	SFR25H
A4A9R51	0757-0464	5	1	RESISTOR 90.9K +-1% .125W TF TC=0+-100	19701	SFR25H
A4A9R52*	0698-8960	6	1	RESISTOR 750K +-1% .125W TF TC=0+-100	19701	SFR25H
A4A9R53	0698-3449	6	1	RESISTOR 28.7K 1% .125W TF TC=0+-100	19701	SFR25H
A4A9R54	0757-0199	-	1	RESISTOR 21.5K +-1% .125W TF TC=0+-100	19701	SFR25H
A4A9R55*	0757-0460	1	1	RESISTOR 61.9K +-1% .125W TF TC=0+-100	19701	SFR25H
A4A9R56	0757-0460	1	1	RESISTOR 61.9K +-1% .125W TF TC=0+-100	19701	SFR25H
A4A9R57*	0698-3460	1	1	RESISTOR 422K 1% .125W TF TC=0+-100	19701	SFR25H
A4A9R58	0698-3450	9	1	RESISTOR 42.21: 1% .125W TF TC=0+-100	19701	SFR25H
A4A9R59*	0698-8824	1	1	RESISTOR 562K +-1% .125W TF TC=0+-100	19701	SFR25H
A4A9R60	2100-3103	6	1	RESISTOR-TRMR 10K 10% TKF SIDE-ADJ 17-TR	73138	89PR10K
A4A9R61	2100-3054	6	1	RESISTOR-TRMR 50K 10% TKF SIDE-ADJ 17-TR	73138	89PR50K
A4A9R62	2100-3162	7	1	RESISTOR-TRMR 200K 10% TKF SIDE-ADJ 17-T	73138	89PR200K
A4A9R63	0698-3437	2	1	RESISTOR 133 1% .125W TF TC=0+-100	19701	SFR25H
A4A9R64	0757-0289	2	1	RESISTOR 13.3K +-1% .125W TF TC=0+-100	19701	SFR25H
A4A9R65	2100-3054	6	1	RESISTOR-TRMR 50K 10% TKF SIDE-ADJ 17-TR	73138	89PR50K
A4A9R66	2100-3103	6	1	RESISTOR-TRMR 10K 10% TKF SIDE-ADJ 17-TR	73138	89PR10K
A4A9R67	0698-0085	0	1	RESISTOR 2.61K 1% .125W TF TC=0+-100	19701	SFR25H
A4A9R68	0698-0085	0	1	RESISTOR 2.61K 1% .125W TF TC=0+-100	19701	SFR25H
A4A9R69	)698-3260	9	1	RESISTOR 464K 1% .125W TF TC=0+-100	19701	SFR25H
A4A9R70*	)698-8826	3	1	RESISTOR 825K +-1% .125W TF TC=0+-100	19701	SFR25H
A4A9R71	)757-0199	3	1	RESISTOR 21.5K +-1% .125W TF TC=0+-100	19701	SFR25H
A4A9R72*	)757-0467	B	1	RESISTOR 121K +-1% .125W TF TC=0+-100	19701	SFR25H
A4A9R74*	)757-0463	4	1	RESISTOR 82.51: +-1% .125W TF TC=0+-100	19701	SFR25H
A4A9R75	)698-3156	2	1	RESISTOR 14.7K 1% .125W TF TC=0+-100	19701	SFR25H
A4A9R76	)757-0465	6	1	RESISTOR 100K +-1% .125W TF TC=0+-100	19701	SFR25H
A4A9R77	)757-0442	3	1	RESISTOR 10K +-1% .125W TF TC=0+-100	19701	SFR25H
A4A9R78	)757-0280	3	1	RESISTOR 1K +-1% .125W TF TC=0+-100	19701	SFR25H
A4A9R79	1757-0280	3	1	RESISTOR 1K +-1% .125W TF TC=0+-100	19701	SFR25H
A4A9R80	)757-0280	3	1	RESISTOR 1K +-1% .125W TF TC=0+-100	19701	SFR25H
A4A9R81	)757-0280	3	1	RESISTOR 1K +-1% .125W TF TC=0+-100	19701	SFR25H
A4A9R82	)757-0317	7	1	RESISTOR 1.33K +-1% .125W TF TC=0+-100	19701	SFR25H
A4A9R83*	)757-0442	3	1	RESISTOR 10K +-1% .125W TF TC=0+-100	19701	SFR25H
A4A9R84*	)757-0461	2	1	RESISTOR 68.1K +-1% .125W TF TC=0+-100	19701	SFR25H
A4A9R85*	1698-3455	4	1	RESISTOR 261K 1% .125W TF TC=0+-100	19701	SFR25H
A4A9R86*	1698-3450	9	1	RESISTOR 42.21: 1% .125W TF TC=0+-100	19701	SFR25H
A4A9R87*	1757-0439	4	1	RESISTOR 6.81K +-1% .125W TF TC=0+-100	19701	SFR25H
A4A9RT1	)837-0007	2	1	THERMISTOR DISC 10K-OHM TC=-4.4%/C-DEG	15801	JA41J1
A4A9RT2	)837-0380	4	1	THERMISTOR TUB WITH AXL LEADS 50K-OHM		MSC 503K
A4A9RT3	1837-0380	4	1	THERMISTOR TUB WITH AXL LEADS 50K-OHM		MSC 503K
A4A9RT4	1837-0224	5	1	THERMISTOR DISC 20K-OHM TC=-4.4%/C-DEG	15801	UUA42J7
A4A9RT5	1837-0393	3	1	THERMISTOR DISC SK-OHM		1DC502K-270-S
A4A9TP1	.251-0600	0	1	CONNECTOR-SGL CONT PIN 1.14-MM-BSC-SZ SQ	27264	16-06-0034
A4A9TP2	.251-0600	0	1	CONNECTOR-SGL CDNT PIN 1.14-MM-BSC-SZ SQ	27264	16-06-0034

**Indicates facto y-selected value*

HP Part Number 85662-60223

A4A9 IF Control

Reference Designatior	HP Part Number	C D	Qty	Description	Mfr Code	Mfr Part Number
A4A9U1	1826-0990		1	IC OP AMP GP DUAL 8-DIP-C PKG	0471:	MC1458U
A4A9U2	1820-0468		1	IC DCDR TTL BCD-TO-DEC 4-TO-10-LINE 4-I	0129!	SN7445N
A4A9U3	1858-0076		1	TRANSISTOR ARRAY 14-PIN PLSTC TO-116	0471:	MPQ2907P
A4A9U4	1858-0076		1	TRANSISTOR ARRAY 14-PIN PLSTC TO-116	0471:	MPQ2907P
A4A9U5	1810-0277		1	NETWORK-RES IO-SIP 2.2K OHM X 9	9163;	MSP10A01
A4A9U6	1820-0468		1	IC DCDR TTL BCD-TO-DEC 4-TO-10-LINE 4-IN	0129!	SN7445N
A4A9U7	1820-1195		1	IC FF TTL LS D-TYPE PDS-EDGE-TRIG CDM CL	01291	SN74LS175N
A4A9U8	1858-0077		1	TRANSISTOR ARRAY 14-PIN PLSTC TO-116	0471:	MPQ2222P
A4A9U9	1820-0471		1	IC INV TTL HEX 1-INP	01295	SN7406N
A4A9U10	1820-1196		1	IC FF TTL LS D-TYPE POS-EDGE-TRIG CDM CL	01295	SN74LS174N
A4A9U11	1820-0468		1	IC DCDR TTL BCD-TO-DEC 4-TO-10-LINE 4-IN	01295	SN7445N
A4A9U12	1810-0280		1	NETWORK-RES 10-SIP 10.0K OHM X 9	91637	MSP10A01
A4A9U13	1820-1216		1	IC DCDR TTL LS 3-TO-8-LINE 3-INP	01295	SN74LS138N
A4A9U14	1820-1196		1	IC FF TTL LS D-TYPE POS-EDGE-TRIG COM CL	01295	SN74LS174N
A4A9U15	1820-0471		1	IC INV TTL HEX 1-INP	01295	SN7406N
A4A9U16	1858-0076		1	TRANSISTOR ARRAY 14-PIN PLSTC TO-116	0471:	MPQ2907P
A4A9U17	1820-1196		1	IC FF TTL LS D-TYPE POS-EDGE-TRIG CDM CL	01295	SN74LS174N
A4A9U18	1820-1196		1	IC FF TTL LS O-TYPE POS-EDGE-TRIG COM CL	01295	SN74LS174N
A4A9U19	1820-0471		1	IC INV TTL HEX 1-INP	01295	SN7406N
A4A9U20	1820-1196		1	IC FF TTL LS D-TYPE POS-EDGE-TRIG CDM CL	01295	SN74LS174N
A4A9U21	1820-2024		1	IC DRVR TTL LS LINE DRVR DCTL	01295	SN74LS244N
A4A9U22	1810-0280		1	NETWORK-RES 10-SIP 10.0K OHM X 9	91637	MSP10A01
A4A9VR1	1902-3203		1	DIODE-ZNR 14.7V 5% DO-35 PD=.4W	04713	
A4A9VR2	1902-0041		1	DIODE-ZNR 5.11V 5% DO-35 PD=.4W	04713	
A4A9W1	3159-0005		1	RESISTOR-ZERO OHMS 22 AWG LEAD DIA	55210	L-2007-1
A4A9W4	3159-0005		1	RESISTOR-ZERO OHMS 22 AWG LEAD DIA	55210	L-2007-1
A4A9W8	3159-0005		1	RESISTOR-ZERO OHMS 22 AWG LEAD DIA	55210	L-2007-1
A4A9W9	3159-0005		1	RESISTOR-ZERO OHMS 22 AWG LEAD DIA	55210	L-2007-1
A4A9W10	3159-0005		1	RESISTOR-ZERO OHMS 22 AWG LEAD DIA	55210	L-2007-1
A4A9W11	3159-0005		1	RESISTOR-ZERO OHMS 22 AWG LEAD DIA	55210	L-2007-1

**Indicates factory-selected value*

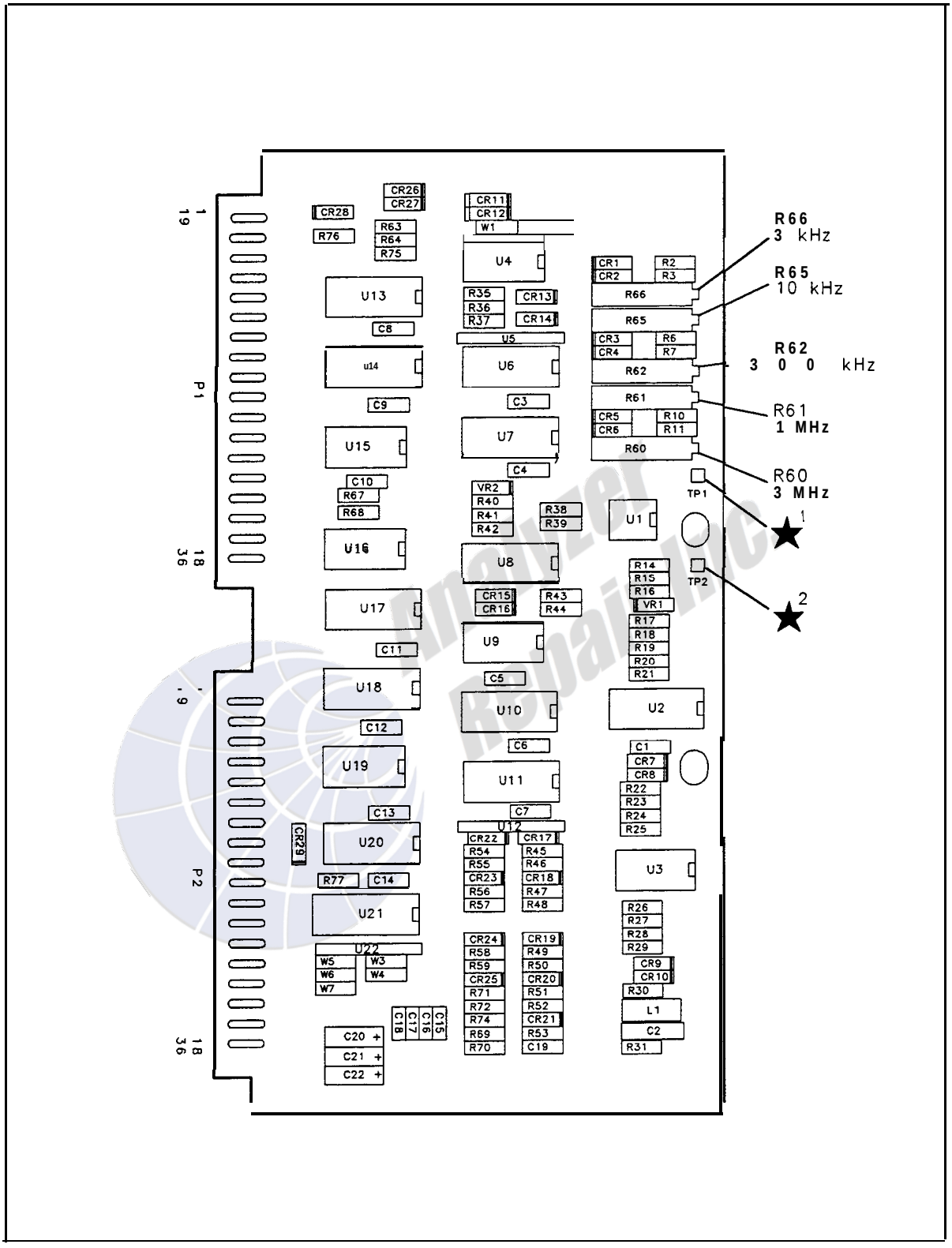

A4A9 IF Control Component Locations, 85662-60187

(Option 462 Tab)

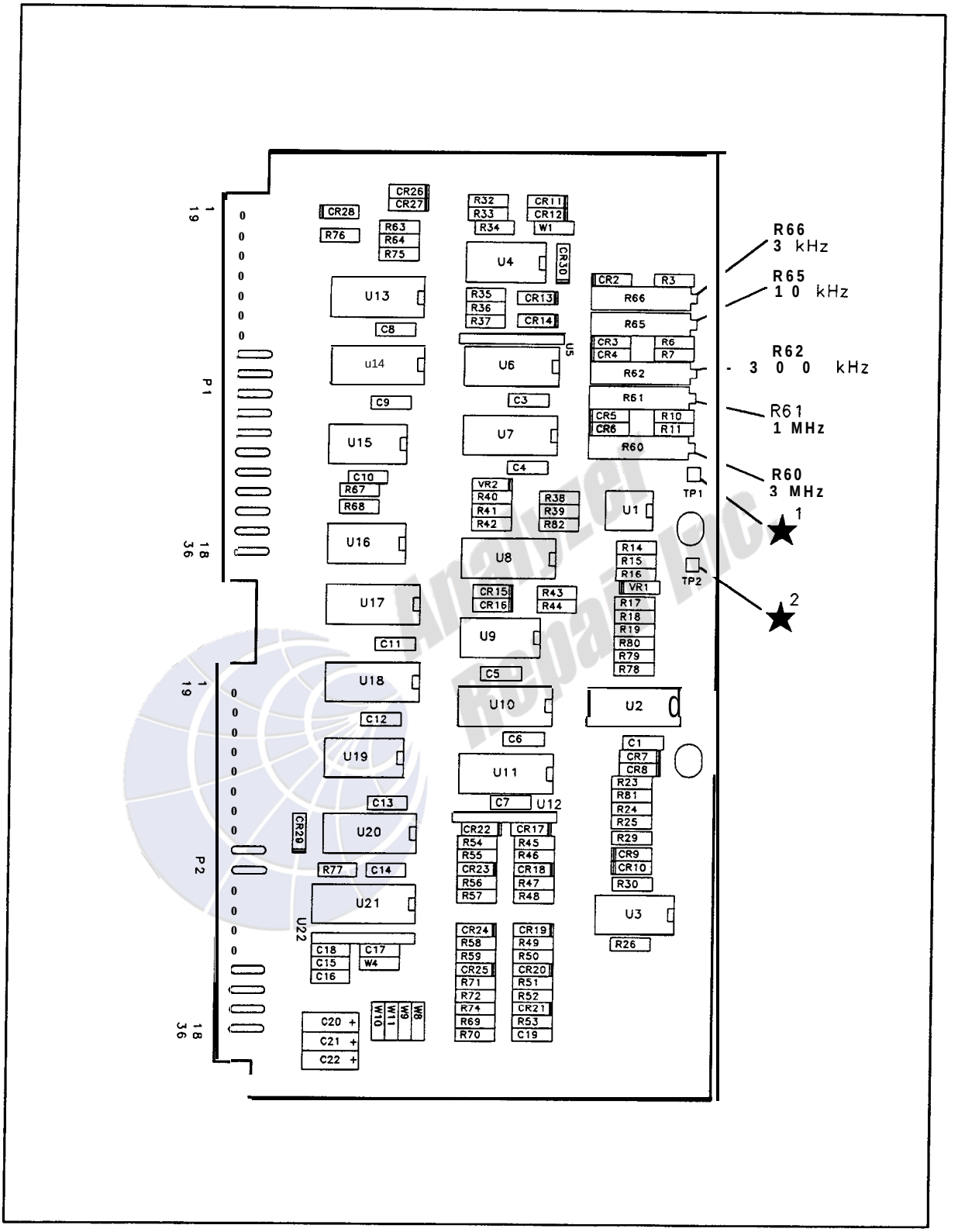

A4A9 IF Control Component Locations, 85662-60211

(Option 462 Tab)

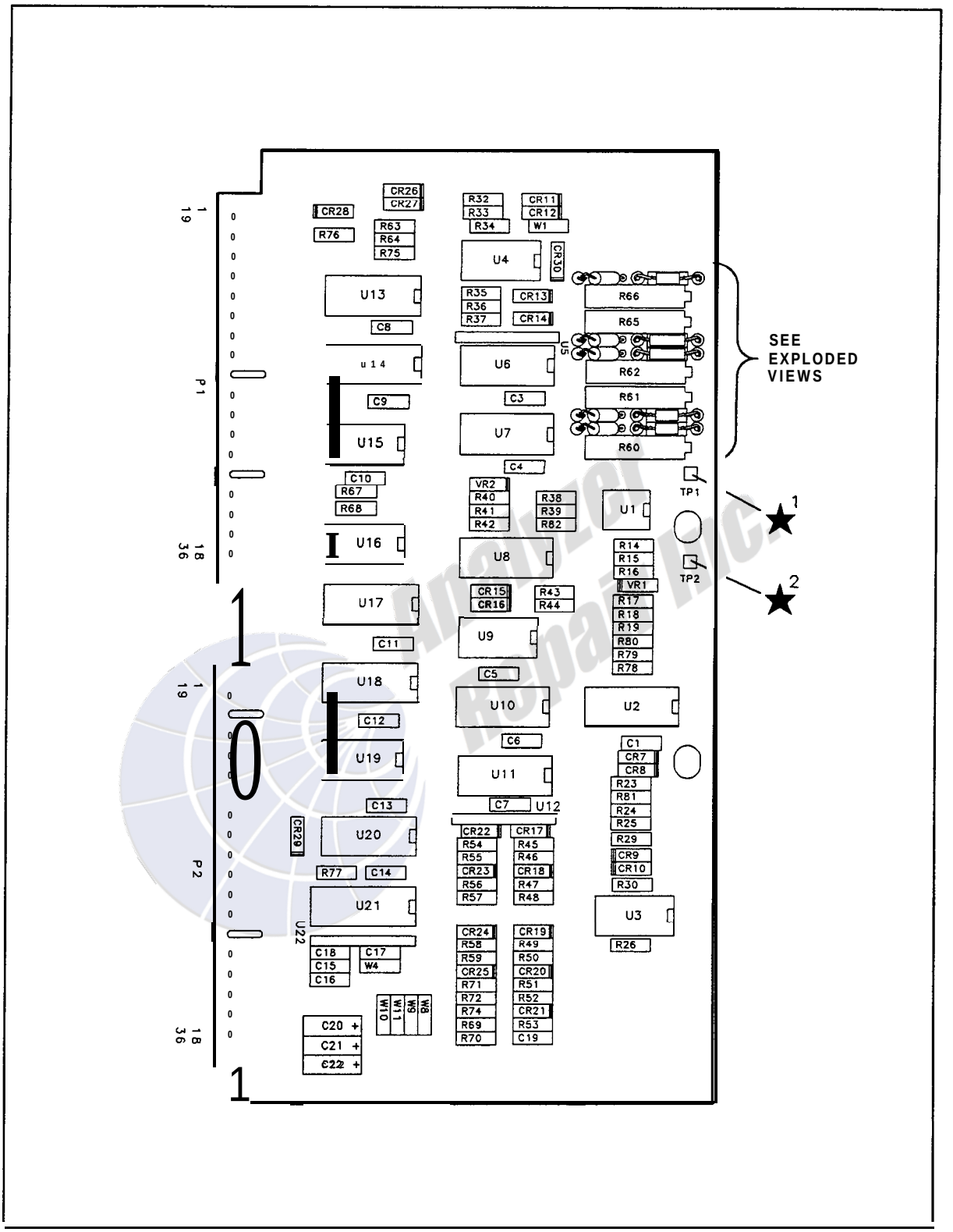

A4A9 IF Control Component Locations, 85662-60223 (1 of 2)

(Option 462 Tab)

EXPLODED VIEWS

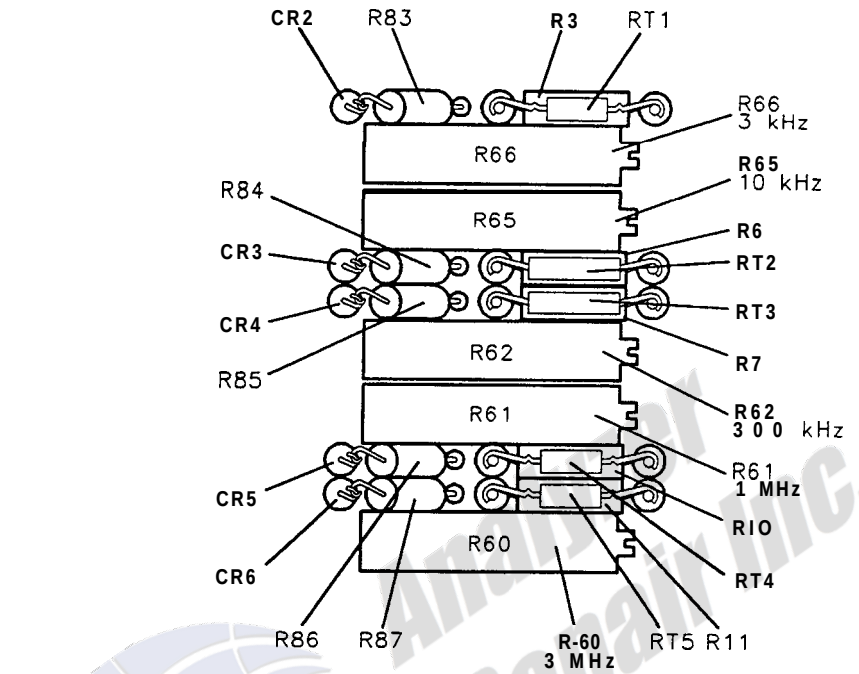

TOP VIEW

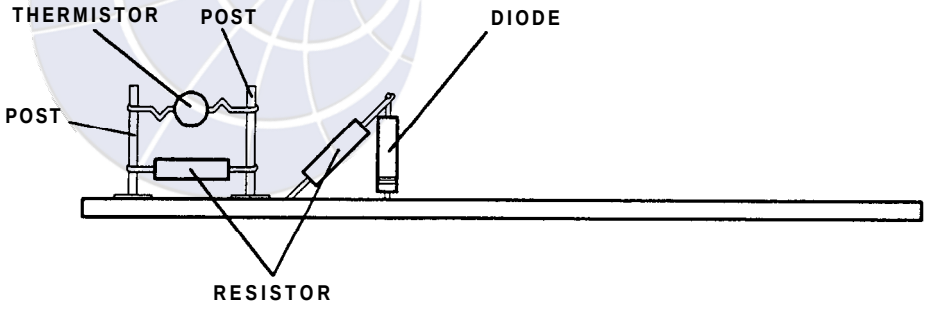

EXAMPLE OF COMPONENT LAYOUT, SIDE VIEW

A4A9 IF Control Component Locations, 85662-60223 (2 of 2)

(Option 462 Tab)

A4A9 IF CONTROL
85662-60187 (OPTION 462)
(SERIAL PREFIXES: 2542A-2812A)

P1

PIN	SIGNAL	TO/FROM	FUNCTION BLOCK
1	REC CAL	A4A1P2-2	A
19	ALOG	A4A1P1-12	A
2	REC ZERO	A4A1P2-1	A
20	BLOG	A4A1P1-6	A
3	CRT DSBL	A1A5P1-7,25	A
21	BW68	A4A4P1-10	E
4	BW7	A4A8P1-10	E
22	LTI0	A4A1U21-49	B
5	BW63	A4A8P1-11	E
23	ADR6	A4A1U21-23	B
6	A1βdB	A4A8P1-7	D
24	ADR2	A4A1U21-25	B
7	A2βdB	A4A8P1-8	D
25	ADR4	A4A1U21-27	B
8	SG2β-2	A4A5P1-10	D
26	ADR3	A4A1U21-26	B
9	SG2β-1	A4A5P1-9	D
27	ADR1	A4A1U21-24	B
10	SG1β	A4A5P1-8	D
28	10B12	A4A1U21-15	A
11	SWITCH	A4A8P1-7	E
29	10B14	A4A1U21-17	A
12	BW5	A4A8,A4A3, A4A4	E
30	10B15	A4A1U21-18	A
13	LOG/LIN	A4A2,A4A3	F
31	10B13	A4A1U21-16	A
14	OS1β	A4A1P1-8	D
32	YBWD	A4A1P1-2	A
15	OS2β-1	A4A1P1-9	D
33	YBWC	A4A1P1-3	A
16	OS2β-2	A4A1P1-10	D
34	YBWB	A4A1P1-4	A
17	GND	A4A1P1-5	A
35	VBWA	A4A1P1-1	A
18	LG2β	A4A2P2-7	D
36	LG1β	A4A2P2-7	D

P2

PIN	SIGNAL	TO/FROM	FUNCTION BLOCK
1	10B11	A4A1U21-14	A
19	10B6	A4A1U21-9	A
2	10B9	A4A1U21-12	A
20	10B8	A4A1U21-11	A
3	10B7	A4A1U21-10	A
21	10B10	A4A1U21-13	A
4	A4dB	A4A5P2-16	C
22	A2dB	A4A2P2-17	C
5	A8dB	A4A5P2-15	C
23	GND		G
6	GND		G
24	GND		G
7	AVdB	A4A5P2-5	C
25	10B5	A4A1U21-8	A
8	GND		G
26	10B3	A4A1U21-6	A
9	GND		G
27	10B1	A4A1U21-4	A
10	GND		G
28	10B6	A4A1U21-3	A
11	GND		G
29	10B2	A4A1U21-5	A
12	30Hz	A4A7P2-1	E
30	10B4	A4A1U21-7	A
13	10Hz	A4A7P2-2	E
31	GND		G
14	300Hz	A4A7P2-7	E
32	GND		G
15	100Hz	A4A7P2-8	E
33	GND		G
16	+5V		G
34	+5V		G
17	-15V		G
35	-15V		G
18	+15V		G
36	+15V		G

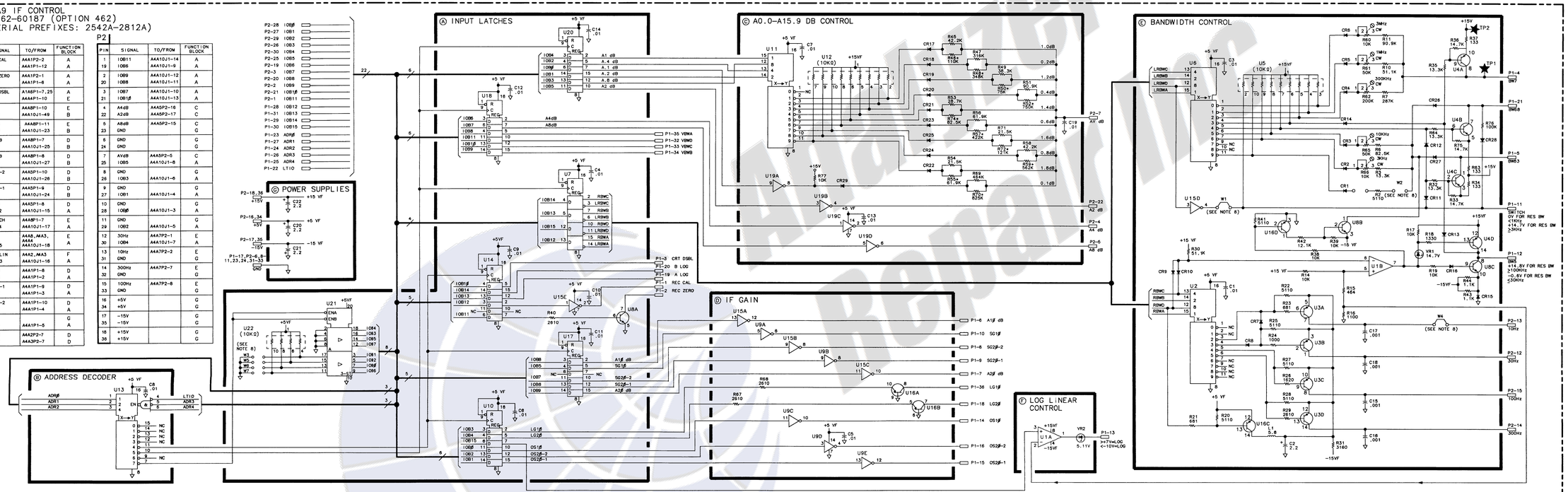

NOTES:

1. REFERENCE DESIGNATORS WITHIN THIS ASSEMBLY ARE ABBREVIATED. FOR COMPLETE REFERENCE DESIGNATION, PREFIX ABBREVIATION WITH ASSEMBLY DESIGNATION.
2. UNLESS OTHERWISE INDICATED: RESISTANCE IS IN OHMS (Ω). CAPACITANCE IS IN MICROFARADS (μF). INDUCTANCE IS IN MICROHENRIES (μH).
3. UNLESS OTHERWISE INDICATED, SIGNALS ENTER AT LEFT SIDE OR TOP AND EXIT AT RIGHT SIDE OR BOTTOM OF FUNCTION BLOCKS.
4. MNEMONIC TABLE:

MNEMONIC	DESCRIPTION
AY DB A 1 DB A 2 DB A 4 DB A 8 DB A2 DB	ATTENUATOR STEPS FOR A4A5 STEP GAIN
A1β DB A2β DB	ATTENUATOR STEPS FOR A4A8 ATTEN-BW FILTER
ADR6-1	INSTRUMENT BUS ADDRESS BITS
ALOG BLOG	LOG EXPAND CONTROLS FOR A4A1 VIDEO PROCESSOR
BW5 BW7 BW63 BW68	BANDWITH CONTROL LINES
10B6-15	INSTRUMENT BUS DATA BITS
LG1β LG2β LOG/LIN	LINEAR GAIN STEPS AND CONTROL FOR LOG AMPLIFIERS
LTI0	LOW = TOP BOX I/O
OS1β OS2β-1 OS2β-2	OFFSET GAIN STEPS FOR A4A1 VIDEO PROCESSOR
REC CAL REC ZERO SG1β SG2β-1 SG2β-2	RECORDER CALIBRATE RECORDER ZERO STEP GAIN 10 DB β 1 STEP GAIN 20 DB β 2
VBWA VBWB VBWC VBWD	VIDEO BANDWITH CONTROL LINES

5. UNLESS OTHERWISE INDICATED LOGIC LEVELS ARE:
   +2.0V TO +6.0V = LOGIC '1' HIGH=H
   0V TO +0.8V = LOGIC '0' LOW=BLANK
6. R45*, R48*, R50*, R52*, R55*, R70*, R72*, AND R74* ARE FACTORY-SELECTED COMPONENTS. TYPICAL VALUES ARE LISTED ON THE SCHEMATIC. ACCEPTABLE VALUES FOR THESE COMPONENTS ARE LISTED BELOW.

R45*	82.5KΩ-147KΩ
R48*	28.1KΩ-464KΩ
R50*	56.2KΩ-100KΩ
R52*	562KΩ-1MΩ
R55*	46.4KΩ-82.5KΩ
R70*	619KΩ-1.1MΩ
R72*	90.9KΩ-162KΩ
R74*	61.9KΩ-110KΩ

7. U8D, U9F, U15F, U19C, AND D19F ARE NOT USED.
8. ONLY JUMPERS W1 AND W4 ARE INSTALLED ON 85662-60187. JUMPERS W2, W3, W5, W6, AND W7 ARE LEFT OPEN.

A4A9

A4A9 IF CONTROL, SCHEMATIC DIAGRAM

A4A9 IF CONTROL
85662-60211 (OPTION 462)
(SERIAL PREFIXES: 2813A-2816A)

P1

PIN	SIGNAL	TO/FROM	FUNCTION BLOCK
1	REC CAL	A4A1P2-2	A
19	ALOG	A4A1P1-12	A
2	REC ZERO	A4A1P2-1	A
20	BLOG	A4A1P1-6	A
3	CRT DSBL	A1A6P1-7,25	A
21	BW68	A4A4P1-10	E
4	BW7	A4A5P1-10	E
22	LTIO	A4A1U1-49	B
5	BW63	A4A8P1-11	E
23	ADR$	A4A1U1-23	B
6	A1$dB	A4A8P1-7	D
24	ADR2	A4A1U1-25	B
7	A2$dB	A4A5P1-8	D
25	ADR4	A4A1U1-27	B
8	SG2$-2	A4A5P1-10	D
26	ADR3	A4A1U1-26	B
9	SG2$-1	A4A5P1-9	D
27	ADR1	A4A1U1-24	B
10	SG1$	A4A5P1-8	D
28	10B12	A4A1U1-15	A
11	SWITCH	A4A8P1-7	E
29	10B14	A4A1U2-17	A
12	BW5	A4A8,4A3, 4A4	E
30	10B15	A4A1U2-18	A
13	LOG/LIN	A4A2,4A3	F
31	10B13	A4A1U2-16	A
14	OS1$	A4A1P1-8	D
32	VDWO	A4A1P1-2	A
15	OS2$-1	A4A1P1-9	D
33	VDWC	A4A1P1-3	A
16	OS2$-2	A4A1P1-10	D
34	VDWB	A4A1P1-4	A
17	GND		G
35	VDWA	A4A1P1-5	A
18	LG2$	A4A2P2-7	D
36	LG1$	A4A3P2-7	D

P2

PIN	SIGNAL	TO/FROM	FUNCTION BLOCK
1	10B11	A4A1U2-14	A
19	10B6	A4A1U1-9	A
2	10B9	A4A1U2-12	A
20	10B8	A4A1U2-11	A
3	10B7	A4A1U2-10	A
21	10B1$	A4A1U1-13	A
4	A4dB	A4A5P2-16	C
22	A2dB	A4A5P2-17	C
5	AB$B	A4A5P2-15	C
23	GND		G
6	GND		G
24	GND		G
7	AV$B	A4A5P2-5	C
25	10B5	A4A1U1-8	A
8	GND		G
26	10B3	A4A1U1-6	A
9	GND		G
27	10B1	A4A1U1-4	A
10	GND		G
28	10B6	A4A1U2-1	G
11	GND		G
29	10B2	A4A1U1-5	A
12	30Hz	A4A7P2-1	E
30	10B4	A4A1U1-7	A
13	1Hz	A4A7P2-2	E
31	GND		G
14	300Hz	A4A7P2-7	E
32	GND		G
15	100Hz	A4A7P2-8	E
33	GND		G
16	+5V		G
34	+5V		G
17	−15V		G
35	−15V		G
18	+15V		G
36	+15V		G

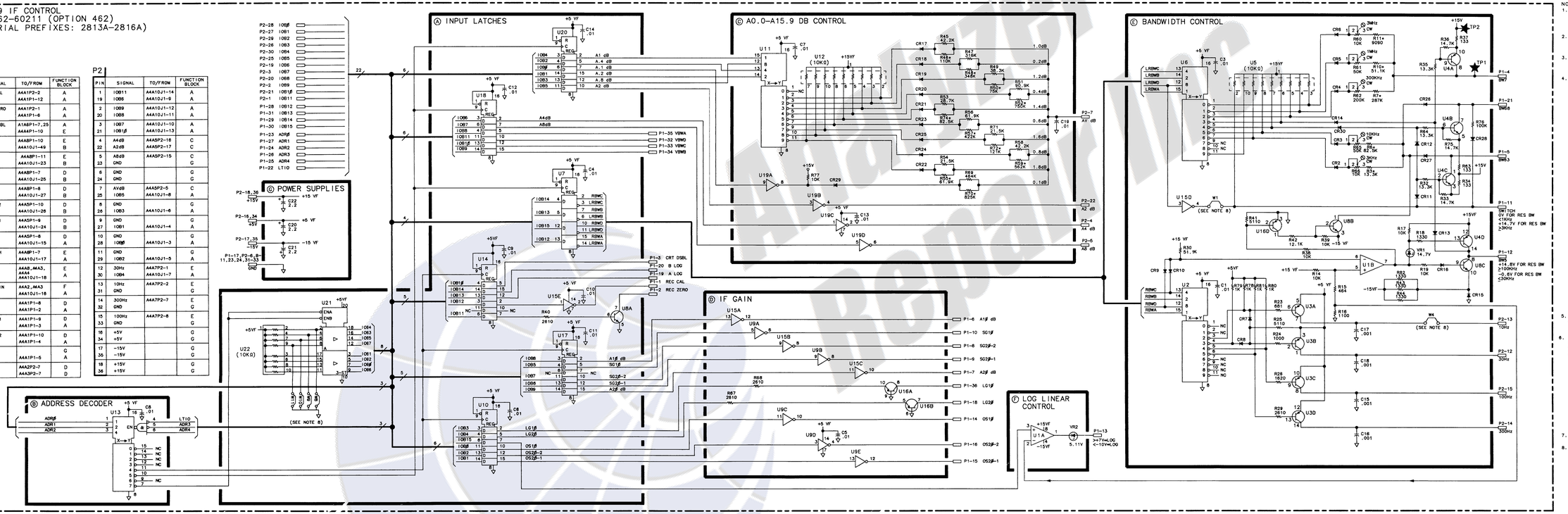

NOTES:

1. REFERENCE DESIGNATORS WITHIN THIS ASSEMBLY ARE ABBREVIATED. FOR COMPLETE REFERENCE DESIGNATION, PREFIX ABBREVIATION WITH ASSEMBLY DESIGNATION.
2. UNLESS OTHERWISE INDICATED: RESISTANCE IS IN OHMS (Ω) CAPACITANCE IS IN MICROFARADS (μF) INDUCTANCE IS IN MICROHENRIES (μH)
3. UNLESS OTHERWISE INDICATED: SIGNALS ENTER AT LEFT SIDE OR TOP AND EXIT AT RIGHT SIDE OR BOTTOM OF FUNCTION BLOCKS.
4. MNEMONIC TABLE:

MNEMONIC	DESCRIPTION
AV DB A.1 DB A.2 DB A.4 DB A.8 DB A1 DB A2 DB A4 DB A8 DB	ATTENUATOR STEPS FOR A4A5 STEP GAIN
A1$ DB A2$ DB	ATTENUATOR STEPS FOR A4A8 ATTEN-DW FILTER
ADR$-4	INSTRUMENT BUS ADDRESS BITS
ALOG BLOG	LOG EXPAND CONTROLS FOR A4A1 VIDEO PROCESSOR
BW5 BW7 BW63 BW68	BANDWIDTH CONTROL SIGNALS
10B$–15	INSTRUMENT BUS DATA BITS
LG1$ LG2$ LOG/LIN	LINEAR GAIN STEPS AND CONTROL FOR LOG AMPLIFIERS
LTIO	LOW = TOP BOX I/O
OS1$ OS2$-1 OS2$-2	OFFSET GAIN STEPS FOR A4A1 VIDEO PROCESSOR
REC CAL REC ZERO SG1$ SG2$-1 SG2$-2	RECORDER CALIBRATE RECORDER ZERO STEP GAIN 10 DB STEP GAIN 20 DB ∉ 1 STEP GAIN 20 DB ∉ 2
VBNA VBWB VBWC VBWO	VIDEO BANDWITH CONTROL LINES

5. UNLESS OTHERWISE INDICATED LOGIC LEVELS ARE:
   +2.0V TO +6.0V = LOGIC '1' HIGH≡H
   0V TO +0.8V = LOGIC '0' LOW≡L.ANC
6. THE COMPONENTS LISTED BELOW ARE FACTORY-SELECTED COMPONENTS. TYPICAL VALUES ARE LISTED ON THE SCHEMATIC. ACCEPTABLE VALUES FOR THESE COMPONENTS ARE LISTED BELOW.

R3*	9.1KΩ-15.2KΩ
R6*	61.9KΩ-110KΩ
R7*	34.2KΩ-340KΩ
R10*	42.2KΩ-61.8KΩ
R11*	2.15KΩ-1MΩ
R46*	82.5KΩ-147KΩ
R48*	28.15Ω-464Ω
R52*	56.2KΩ-100KΩ
R53*	392Ω-1.96KΩ
R55*	40.4KΩ-82.5KΩ
R57*	316KΩ-562KΩ
R58*	422KΩ-750KΩ
R70*	619KΩ-1.1MΩ
R72*	90.9KΩ-162KΩ
R74*	61.9KΩ-110KΩ

7. U8D, U9F, U15F, U16C, U16E, AND U19F ARE NOT USED.
8. A4A9F CONTROL FOR OPTION 462 (85662-60211) INCLUDES JUMPERS W1, W4, W6, W9, W10, AND W11. JUMPER W2 IS NOT LOADED ON THIS VERSION.

A4A9

A4A9 IF CONTROL, SCHEMATIC DIAGRAM

A4A9 IF CONTROL
85662-60223 (OPTION 462)
(SERIAL PREFIX: 2848A)

P1

PIN	SIGNAL	TO/FROM	FUNCTION BLOCK
1	REC CAL	A4A1P2-2	A
19	ALOG	A4A1P1-12	A
2	REC ZERO	A4A1P2-1	A
20	BLOG	A4A1P1-6	A
3	CRT DSBL	A1A6P1-7,25	A
21	BW8$	A4A4J1-10	E
4	BW7	A4A5P1-10	E
22	LTI0	A4A1U21-49	B
5	BW63	A4A8P1-11	E
23	ADR$	A4A1U21-23	B
6	A1$dB	A4A8P1-7	D
24	ADR3	A4A1U21-25	B
7	A2$dB	A4A8P1-8	D
25	ADR4	A4A1U21-27	B
8	SG2$-2	A4A5P1-10	D
26	ADR3	A4A1U21-26	B
9	SG2$-1	A4A5P1-9	D
27	ADR1	A4A1U21-24	B
10	SG1$	A4A5P1-8	D
28	10B12	A4A1U21-15	A
11	SWITCH	A4A8P1-7	E
29	10B14	A4A1U21-17	A
12	BW5	A4A8,A4J3, A4A4	E
30	10B15	A4A1U21-18	A
13	LOG/LIN	A4A2,A4J3	F
31	10B13	A4A1U21-16	A
14	OS1$	A4A1P1-8	D
32	VBW0	A4A1P1-2	A
15	OS2$-1	A4A1P1-4	D
33	VBWC	A4A1P1-3	A
16	OS2$-2	A4A1P1-10	D
34	VBW8	A4A1P1-4	A
17	GND		G
35	VBWA	A4A1P1-5	A
18	LG2$	A4A2P2-7	D
36	LG1$	A4A3P2-7	D

P2

PIN	SIGNAL	TO/FROM	FUNCTION BLOCK
1	10B11	A4A1U21-14	A
19	10B6	A4A1U21-9	A
2	10B9	A4A1U21-12	A
20	10B8	A4A1U21-11	A
3	10B7	A4A1U21-10	A
21	10B1$	A4A1U21-13	A
4	A4dB	A4A5P2-16	C
22	A2dB	A4A1U21-47	C
5	A8dB	A4A5P2-15	C
23	GND		G
6	GND		G
24	GND		G
7	AV$B	A4A5P2-5	C
25	10B5	A4A1U21-8	A
8	GND		G
26	10B3	A4A1U21-6	A
9	GND		G
27	10B1	A4A1U21-4	A
10	GND		G
28	10B$	A4A1U21-3	A
11	GND		G
29	10B2	A4A1U21-5	A
12	3GHz	A4A7P2-1	E
30	10B4	A4A1U21-7	A
13	10Hz	A4A7P2-2	E
31	GND		G
14	300Hz	A4A7P2-7	E
32	GND		G
15	100Hz	A4A7P2-8	E
33	GND		G
16	+5V		G
34	+5V		G
17	-15V		G
35	-15V		G
18	+15V		G
36	+15V		G

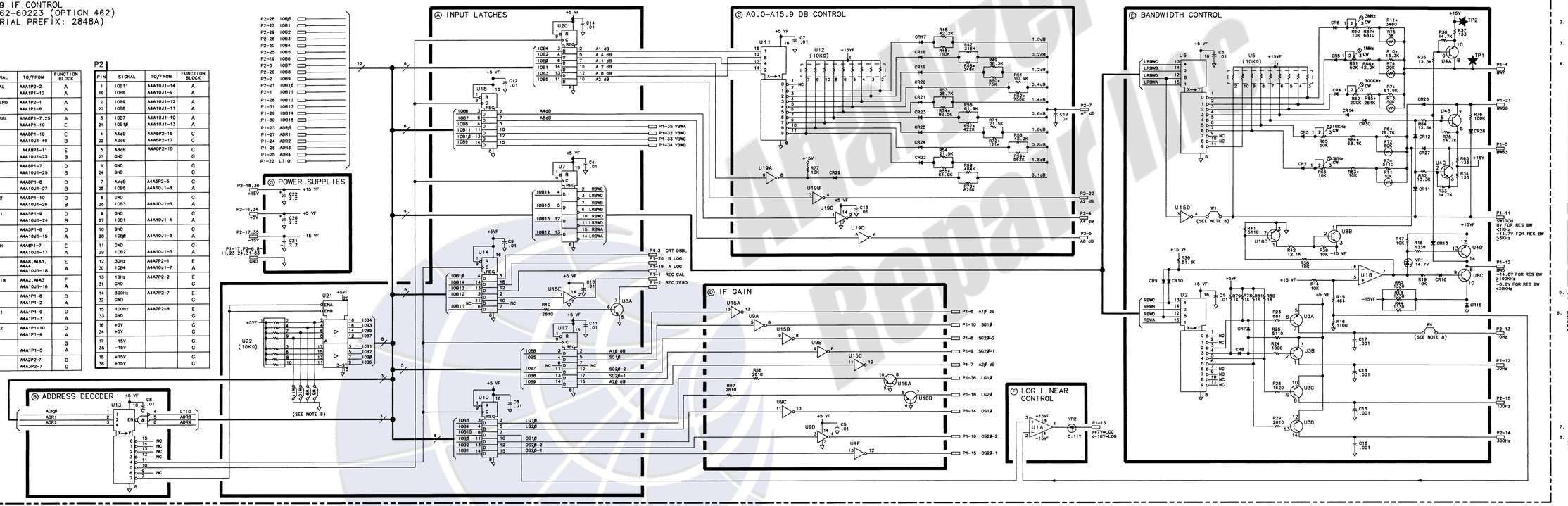

NOTES:

1. REFERENCE DESIGNATORS WITHIN THIS ASSEMBLY ARE ABBREVIATED. FOR COMPLETE REFERENCE DESIGNATION, PREFIX ABBREVIATION WITH ASSEMBLY DESIGNATION.
2. UNLESS OTHERWISE INDICATED: RESISTANCE IS IN OHMS (Ω). CAPACITANCE IS IN MICROFARADS (μF) INDUCTANCE IS IN MICROHENRIES (μH)
3. UNLESS OTHERWISE INDICATED: SIGNALS ENTER AT LEFT SIDE OR TOP AND EXIT AT RIGHT SIDE OR BOTTOM OF FUNCTION BLOCKS.
4. MNEMONIC TABLE:

MNEMONIC	DESCRIPTION
AV DB A1 DB A2 DB A4 DB A8 DB	ATTENUATOR STEPS FOR A4A5 STEP GAIN
A1$ DB A2$ DB	ATTENUATOR STEPS FOR A4A8 ATTEN-BW FILTER
ADR$-4	INSTRUMENT BUS ADDRESS BITS
ALOG BLOG	LOG EXPAND CONTROLS FOR A4A1 VIDEO PROCESSOR
BW7 BW63 BW8$	BANDWIDTH CONTROL LINES
10B$-15	INSTRUMENT BUS DATA BITS
LG1$ LG2$ LOG/LIN	LINEAR GAIN STEPS AND CONTROL FOR LOG AMPLIFIERS
LTI0	LOW = TOP BOX I/O
OS1$ OS2$-1	OFFSET GAIN STEPS FOR A4A1 VIDEO PROCESSOR
REC CAL REC ZERO	RECORDER CALIBRATE RECORDER ZERO
SG1$ SG2$-1 SG2$-2	STEP GAIN 10 DB STEP GAIN 20 DB #1 STEP GAIN 20 DB #2
VBWA VBW8 VBWC VBW0	VIDEO BANDWITH CONTROL LINES

5. UNLESS OTHERWISE INDICATED LOGIC LEVELS ARE:
   +2.0V TO +46.0V = LOGIC "1" HIGH=H
   0V TO +0.8V = LOGIC "0" LOW=BLANK
6. THE COMPONENTS LISTED ARE FACTORY-SELECTED COMPONENTS. TYPICAL VALUES ARE LISTED ON THE SCHEMATIC. ACCEPTABLE VALUES FOR THESE COMPONENTS ARE LISTED BELOW.

R3:	4.22KΩ-6.19KΩ
R4:	21.5KΩ-36.8KΩ
R5:	11.0KΩ-16.2KΩ
R11*:	2.67KΩ-4.42KΩ
R12*:	82.5KΩ-147KΩ
R48:	261KΩ-464KΩ
R49:	464KΩ-825KΩ
R50:	59.2KΩ-196KΩ
R55*:	48.4KΩ-82.5KΩ
R57:	316KΩ-562KΩ
R59*:	422KΩ-750KΩ
R70*:	619KΩ-1.1MΩ
R72*:	90.9KΩ-162KΩ
R73*:	51.1KΩ-90.9KΩ
R83:	7.15KΩ-14.7KΩ
R84:	42.2KΩ-100KΩ
R85:	18KΩ-34KΩ
R86:	28.7KΩ-61.9KΩ
R87:	2.32KΩ-8.25KΩ

7. U9D, U9F, U15F, U18C, U19E, AND U19F ARE NOT USED.
8. A4A8 (IF CONTROL FOR OPTION 462 (85662-60223) INCLUDES JUMPERS W1, W4, W5, W6, W10 AND W11. JUMPER W2 IS NOT LOADED ON THIS VERSION.

General Parts Listing

Introduction

This chapter contains information on ordering replacement parts and assemblies. The parts lists document all assembly versions up to the time that the manual is printed.

Table 1 lists reference designations, abbreviations, and value multipliers used in the parts lists.

Table 2 lists the names and addresses that correspond to the manufacturer code numbers in the parts lists.

Table 3 lists the various types of AC power cables that are available, their description, and part numbers.

Table 4 lists all major assemblies, part numbers, and descriptions of the assemblies.

Table 5 lists cables that are not part of a major assembly, part numbers, and descriptions of the cables .

Table 6 lists miscellaneous parts, part numbers, and descriptions of the parts.

Figures 1 through 6 illustrate the locations of instrument assemblies and hardware with the part numbers listed.

Analyzer Repair Inc.

General Parts List Format

The following information is listed for each part:

1. The Hewlett-Packard part number.
2. The part number check digit (CD).
3. The total quantity (Qty) in the assembly. (This number is stated once and only at the first mention of the part.)
4. The description of the part.
5. A five-digit code indicating a typical manufacturer of the part.
6. The manufacturer part number.

Ordering Information

To order a part listed in the general parts table, quote the HP part number, include the check digit, and indicate the quantity required. Address and mail the order to the Hewlett-Packard Sales and Service Office nearest you. The check digit ensures accurate and timely processing of your order.

To order a part that is not listed in the general parts table, include the function and description of the part, and the number of parts required. Address and mail the order to the Hewlett-Packard Sales and Service Office nearest you.

Direct Mail-Order System

Within the USA, Hewlett-Packard can supply parts through a direct mail-order system. Advantages of using the system are as follows:

1. Direct ordering and shipment from the Hewlett-Packard Parts Center in Mountain View, California.
2. No maximum or minimum quantity requirement on any mail order. (There is a minimum-order quantity imposed on orders made through the Hewlett-Packard Sales and Service Offices when the orders require billing and invoicing.)
3. Prepaid transportation. (There is a handling charge added to each order.)
4. No invoices.

A check or money order must accompany direct-mail orders. Mail-order forms and specific ordering information are available from Hewlett-Packard Sales and Service Offices.

Direct Phone-Order System

A phone-order system is available within the USA for regular and hotline replacement parts service. Hewlett-Packard has provided a toll-free phone number, and accepts Mastercard or Visa for orders.

Regular Orders

The toll-free phone number is (800) 227-8164. It is available 6 am to 5 pm (Pacific time), Monday through Friday. Regular orders require a four-day delivery time.

Hotline Orders

The hotline service for ordering emergency parts is available 24 hours a day, 365 days a year. There is an additional charge on hotline orders to cover the cost of freight and special handling.

The toll-free hotline phone number is (800) 227-8164, available 6 am to 5 pm (Pacific time), Monday through Friday. The phone number for after-hours, weekends, and holidays is (415) 968-2347. Hotline orders are normally delivered the following business day.

Analyzer Repair Inc.

Table 1. Reference Designations, Abbreviations, and Multipliers (1 of 4)

REFERENCE DESIGNATIONS

A	Assembly	F	Fuse	RT	Thermistor
AT	Attenuator, Isolator, Limiter, Termination	FL	Filter	S	Switch
		HY	Circulator	T	Transformer
B	Fan, Motor	J	Electrical Connector (Stationary Portion), Jack	TB	Terminal Board
BT	Battery			TC	Thermocouple
C	Capacitor			TP	Test Point
CP	Coupler	K	Relay	U	Integrated Circuit, Microcircuit
CR	Diode, Diode Thyristor, Step Recovery Diode, Varactor	L	Coil, Inductor		
		M	Meter	V	Electron Tube
		MP	Miscellaneous Mechanical Part	VR	Breakdown Diode (Zener), Voltage Regulator
DC	Directional Coupler	P	Electrical Connector (Movable Portion), Plug		
DL	Delay Line			W	Cable, Wire, Jumper
DS	Annunciator, Lamp, Light Emitting Diode (LED), Signaling Device (Visible)			X	Socket
		Q	Silicon Controlled Rectifier (SCR), Transistor, Triode Thyristor	Y	Crystal Unit (Piezoelectric, Quartz)
				Z	Tuned Cavity, Tuned Circuit
E	Miscellaneous Electrical Part	R	Resistor		

ABBREVIATIONS

A

A	Across Flats, Acrylic, Air (Dry Method), Ampere
ADJ	Adjust, Adjustment
ANSI	American National Standards Institute (formerly USASI-ASA)
ASSY	Assembly
AWG	American Wire Gage

B

BCD	Binary Coded Decimal
BD	Board, Bundle
BE-CU	Beryllium Copper
BNC	Type of Connector
BRG	Bearing, Boring
BRS	Brass
BSC	Basic
BTN	Button

C

C	Capacitance, Capacitor, Center Tapped, Cermet, Cold, Compression
CCP	Carbon Composition Plastic
CD	Cadmium, Card, Cord
CER	Ceramic
CHAM	Chamfer
CHAR	Character, Characteristic, Charcoal
CMOS	Complementary Metal Oxide Semiconductor
CNDCT	Conducting, Conductive, Conductivity, Conductor
CONT	Contact, Continuous, Control, Controller
CONV	Converter
CPRSN	Co mpression
CUP-PT	Cup Point
c w	Clockwise, Continuous Wave

D

D	Deep, Depletion, Depth, Diameter, Direct Current
DA	Darlington

Analyzer Repair Inc.

Table 1. Reference Designations, Abbreviations, and Multipliers (2 of 4)

ABBREVIATIONS

DAP-GL	Diallyl Phthalate Glass	FT	Current Gain Bandwidth Product (Transition Frequency), Feet, Foot	JFET	Junction Field Effect Transistor
DBL	Double				
DCDR	Decoder				**K**
DEG	Degree				
D-HOLE	D-Shaped Hole	FXD	Fixed	K	Kelvin, Key, Kilo, Potassium
DIA	Diameter				
DIP	Dual In-Line Packag		G	KNRLD	Knurled
DIP-SLDR	Dip Solder			KVDC	Kilovolts
D-MODE	Depletion Mode	GEN	General, Generator		Direct Current
DO	Package Type Designation	GND	Ground		
		GP	General Purpose, Group		**L**
DP	Deep, Depth, Diametric Pitch, Dip			LED	Light Emitting Diode
DP3T	Double Pole Three Throw		H	LG	Length, Long
DPDT	Double Pole Double Throw	H	Henry, High	LIN	Linear, Linearity
		HDW	Hardware	LK	Link, Lock
DWL	Dowel1	HEX	Hexadecimal, Hexagon, Hexagonal	LKG	Leakage, Locking
				LUM	Luminous
	E	KLCL	Helical		
E-R	E-Ring	HP	Hewlett-Packard Company, High Pass		M
EXT	Extended, Extension, External, Extinguish			M	Male, Maximum, Mega, Mil, Milli, Mode
			I		
	F				
F	Fahrenheit, Farad, Female, Film (Resistor), Fixed, Flange, Frequency	IC	Collector Current, Integrated Circuit	MA	Milliampere
		ID	Identification, Inside Diameter	MACH	Machined
				MAX	Maximum
FC	Carbon Film/ Composition, Edge of Cutoff Frequency, Face	IF	Forward Current, Intermediate Frequency	MC	Molded Carbon Composition
				MET	Metal, Metallized
FDTHRU	Feedthrough	IN	Inch	MHZ	Megahertz
FEM	Female	INCL	Including	MINTR	Miniature
FIL-HD	Fillister Head	INT	Integral, Intensity, Internal	MIT	Miter
FL	Flash, Flat, Fluid			MLD	Mold, Molded
FLAT-PT	Flat Point		J	MM	Magnetized Material: Millimeter
FR	Front			MOM	Momentary
FREQ	Frequency	J-FET	Junction Field Effect Transistor	MTG	Mounting
				MTLC	Metallic
				MW	Milliwatt

Analyzer Repair Inc

Table 1. Reference Designations, Abbreviations, and Multipliers (3 of 4)

ABBREVIATIONS

	N
N	Nano, None
N-CHAN	N-Channel
NH	Nanohenry
NM	Nanometer, Nonmetallic
NO	Normally Open, Number
NOM	Nominal
NPN	Negative Positive Negative (Transistor
NS	Nanosecond, Non-Shorting, Nose
NUM	Numeric
NYL	Nylon (Polyamide)
	0
OA	Over-All
OD	Outside Diameter
OP AMP	Operational Amplifier
OPT	Optical, Option, Optional
	P
'A	Picoampere, Power Amplifier
'AN-HD	Pan Head
'AR	Parallel, Parity
'B	Lead (Metal), Pushbutton
'C	Printed Circuit
'CB	Printed Circuit Board
'-CHAN	P-Channel
'D	Pad, Power Dissipation
'F	Picofarad, Power Factor
'KG	Package
PLSTC	Plastic
PNL	Panel
PNP	Positive Negative Positive (Transistor
POLYC	Polycarbonate
POLYE	Polyester
POT	Potentiometer
POZI	Pozidriv Recess
PREC	Precision
PRP	Purple, Purpose
PSTN	Piston
PT	Part, Point, Pulse Time
PW	Pulse Width
	Q
3	Figure of Merit
	R
R	Range, Red, Resistance, Resistor
	Right, Ring
REF	Reference
RES	Resistance, Resistor
RF	Radio Frequency
RGD	Rigid
RND	Round
RR	Rear
RVT	Rivet, Riveted
	S
SAWR	Surface Acoustic Wave Resonator
SEG	Segment
SGL	Single
SI	Silicon, Square Inch
SL	Slide, Slow
SLT	Slot. Slotted
SMA	Subminiature, A Type (Threaded Connector)
SMB	Subminiature, B Type (Slip-on Connector)
SMC	Submi niature, C-Type (Threader Connector)
SPCG	Spacing
SPDT	Single Pole Double Throw
SPST	Single Pole Single Throw
SQ	Square
SST	Stainless Steel
STL	Steel
SUBMIN	Subminiature
SZ	Size
	T
T	Teeth, Temperatu re, Thickness, Time, Timed, Tooth, Typical
TA	Ambient Temperature, Tantalum
TC	Temperature Coeffi cient
THD	Thread, Threaded
THK	Thick
TO	Package Type Designation
TPG	**Tapping**
:R-HD	Truss Head
TRMR	Trimmer
TRN	Turn, Turns
TRSN	Torsion

Analyzer Repair Inc.

Table 1. Reference Designations, Abbreviations, and Multipliers (4 of 4)

ABBREVIATIONS					
	U	VAR	Variable		Y
		VDC	Volts-Direct Current		
UCD	Microcandela			YIG	Yttrium-Iron-Garnet
UF	Microfarad				
UH	Microhenry		**W**		
UL	Microliter, Underwriters' Laboratories, Inc.	W	Watt, Wattage, White, Wide, Width		**Z**
LJNHDND	Unhardened	W/SW	With Switch	ZNR	Zener
		WW	Wire Wound		
	V				
			X		
V	Variable, Violet, Volt, Voltage	X	By (Used with Dimensions), Reactance		
VAC	Vacuum, Volts—Alternating Current				

MULTIPLIERS					
Abbreviation	**Prefix**	**Multiple**	**Abbreviation**	**Prefix**	**Multiple**
T	tera	10^{12}	m	milli	10^{-3}
G	giga	10^{9}	μ	micro	10^{-6}
M	mega	10^{6}	n	nano	10^{-9}
k	kilo	10^{3}	p	pico	10^{-12}
da	deka	10^{2}	f	femto	10^{-15}
d	deci	10^{-1}	a	atto	10^{-18}
c	centi	10^{-2}			

Analyzer Repair Inc.

Table 2. Manufacturers Code List

Mfr Codr	Manufacturer Name	Address	Country	ZIP Code
00032	NEC ELECTRONICS INC	MTN VIEW, CA	us	9404:
00046	UNITRODE CORP	LEXINGTON, MA	us	0217:
0007:5	ARIZONA COIL INC	NOGALES, AZ	us	85621
0027:3	STILLWATER MFG CO	EAST FREEDOM, MA	us	02717
00278	MCCOY ELECTRONICS CO	HOLLY SPRINGS, PA	us	17065
00350	EXAR INTEGRATED SYSTEMS INC	SUNNYVALE, CA	us	94086
00466	NORELCO NORTH AMER PHILIPS LTG CORF	LOS ANGELES, CA	us	90021
0049:3	UNITED CHEMI-CON INC	COMPTON, CA	us	90220
0074E5	ROHM CORP	IRVINE, CA	us	9271:
00775	NICHICON (AMERICA) CORP	SCHAUMBERG, IL	us	6019:
00830	KYOCERA INTERNATIONAL INC	SAN DIEGO, CA	us	
00901	UNION CARBIDE CORP	DANBURY, CT	us	06810
01064	SCHAAL BROS INC	BERTHOUD, CO	us	8051:
01074	HOLSWORTHY ELECTRONICS LTD	HOLSWORTHY	EG	
01128	RES-NET CORP	WHIPPANY, NJ	us	07981
01131	WESTERN THERMISTOR CORP	OCEANSIDE, CA	us	92054
01136	ELCO INDUSTRIES INC	ROCKFORD, IL	us	6112:
01172	R C D COMPONENTS INC	BEDFORD, NH	us	03102
01185	MAGNET WIRE CORP	NEW YORK, NY	us	1961:
01230	AEROVOX CORP	NEW BEDFORD, MA	us	02741
01250	GTE SYLVANIA ELEK COMPONENTS GROUP	WALTHAM, MA	us	02154
0133s	GETTIG ENGRG & MFG CO INC	SPRING MILLS, PA	us	1687:
01380	AMP INC	HARRISBURG, PA	us	17111
0140s	CROVEN CRYSTALS	WHITBY	CN	L1N 5
11417	NEL FREQUENCY CONTROLS INC	BURLINGTON, WI	us	53105
01452	SANGAMO WESTON INC	VORCROSS, GA	us	30071
11461	GOE ENGINEERING CO INC	ONTARIO, CA	us	91761
01468	STETTNER & CO	LAUF	GM	D-856
11478	B0YD CORP	PLEASANTON, CA	us	94566
11542	HP DIV 01 SAN JOSE COMPONENTS	SAN JOSE, CA	us	95131
11590	PLESSEY SEMICONDUCTORS	SANTA ANA, CA	us	92705
11607	ALLEN-BRADLEY CO INC	EL PASO, TX	us	79935
01688	MURATA CORPORATION OF AMERICA	MARIETTA, GA	us	30067
11691	TRW INC SEMICONDUCTOR DIV	LAWNDALE, CA	us	M260
31698	TEXAS INSTRUMENTS INC	DALLAS, TX	us	75265
11708	TUBULATION	SANTA CRUZ, CA	us	95060
11736	ALLIED ELECTRONICS CORP	CHICAGO, IL	us	60612
11760	MATSUO ELECTRONICS OF AMERICA	HUNTINGTON BEACH, CA	us	90245
11795	SYNERTEK	SANTA CLARA, CA	us	95051
11850	AROMAT CORP	MOUNTAINSIDE, NJ	us	07092
11854	RCL ELECTRONICS INC	NORTHBROOK, IL	us	60062
01869	PULSE ENGINEERING INC	SAN DIEGO, CA	us	92111
01876	HP DIV 02 SCD IC'S	SANTA CLARA, CA	us	95050
01885	HAMILTON STANDARD CONTROLS INC	WINDWOR LOCKS, CT	us	06096
01886	COILCRAFT INC	CARY, IL	us	60013
11887	FERROXCUBE CORP	SAUGERTIES, NY	us	12477

Analog Research Inc.

Table 2. Manufacturers Code List (continued)

Mfr Code	Manufacturer Name	Address	Countr	ZIP Cod
01898	HI-G CO INC	HARTFORD, CT	US	6611
01916	BUNKERRAMO CORPAMPHENOLCONNDI'	BROADVILLE, IL	US	6015
01921	RCA CORP	NEW YORK, NY	US	1011
0192:	NYLOGRIP PRODUCTS	WALTHAM, MA	US	0215
01924	ITW FASTEX	DES PLAINES, IL	US	6001
01939	ELPAC INC COMPONENTS DIV	IRVINE, CA	US	9266
0194:	HP DIV 04 SPD CABLES 64	PALO ALTO, CA	US	943a
0195:	HP DIV 04 SPD MOLDING 91	PALO ALTO, CA	US	943a
0197:	GE CO SEMICONDUCTOR PROD DEPT	AUBURN, NY	US	1320:
01991	TRANSITRON ELECTRONIC CORP	WAKEFIELD, MA	US	0188
01992	KDI PYROFILM CORP	WHIPPANY, NJ	US	0798:
01993	MARKEL CORP	NORRISTOWN, PA	US	1940
02010	AVX CORP	GREAT NECK, NY	US	1102:
02030	NATIONAL WIRE & CABLE CO INC	LOS ANGELES, CA	US	9003:
02031	MOTOROLA INC	ROSELLE, IL	US	6919:
02038	UNICORP	ORANGE, NJ	US	0705(
02062	HP DIV 05 MSD	SAN JOSE, CA	US	9430
02086	WESTINGHOUSE ELEC CORP SEMICON DEPT	YOUNGWOOD, PA	US	15695
02091	ULTRONM INC	GRAND JUNCTION, C(	US	81501
02123	EG & G INC	WELLESLEY, MA	US	02181
D2139	MEPCO/ELECTRA INC	MORRISTOWN, NJ	US	07960
02145	RAYCHEM CORP	MENLO PARK, CA	US	9402:
52160	PANDUIT CORP	TINLEY PARK, IL	US	60477
32170	AMATOM ELEK HARDWARE DIV OF MITE	NEW ROCHELLE, NY	US	06515
32172	JEFFERS ELECTRONICS INC	NOGALES, AZ	US	B5621
12180	PRECISION MONOLITHICS INC	SANTA CLARA, CA	US	35054
02191	CORNING COMPONENTS INC	CORNING, NY	US	1483C
12194	ROBINSON NUGENT INC	JEW ALBANY, IN	US	47150
12210	MILTON ROSS CO	SOUTHHAMPTON, PA	US	18966
12215	KELVIN ELECTRIC CO	JAN NUYS, CA	US	31401
12236	SILICON TRANSISTOR CORP	CHELMSFORD, MA	US	11530
12237	FAIRCHILD SEMICONDUCTOR CORP	CUPERTINO, CA	US	35014
12273	TRW INC BURLINGTON DIV	BURLINGTON, IA	US	52601
02290	RAYTHEON CO SEMICONDUCTOR DIV HQ	MOUNTAIN VIEW, CA	US	34040
02296	HP DIV 08 COLO SPRGS	COLORADO SPGS, CO	US	30907
02344	GE CO MINIATURE LAMP PROD DEPT	CLEVELAND, OH	US	14112
02362	HP DIV 09 LID COMPONENTS	LOVELAND, CO	US	80537
02363	HP DIV C5 COLORADO IC	FT COLLINS, CO	US	80525
02366	KOA SPEER ELECTRONICS INC	BRADFORD, PA	US	16701
02367	CORNELL-DUBILIER/SANGAMO	VAYNE, NJ	US	07470
02379	TEXAS CAPACITOR CO INC	HOUSTON, TX	US	77036
02392	C & K COMPONENTS INC	NEWTON, MA	US	02158
02408	DIXON INDUSTRIES CORPORATION	BRISTOL, RI	US	02809
02414	BURNDY CORP	NORWALK, CT	US	16856
02415	DALE ELECTRONICS INC	YANKTON, SD	US	57078
02440	THOMPSON BREMER DIV VARE	CHICAGO, IL	US	io622

Analog Relay Inc.

Table 2. Manufacturers Code List (continued)

Mfr Code	Manufacturer Name	Address	Country	ZIP Codr
02465	ANILLO INDUSTRIES INC	ORANGE, CA	us	92667
02483	CTS CORP	ELKHART, IN	us	46514
02484	CTS CORP PASO ROBLES	PASO ROBLES, CA	us	93446
02499	IRC INC	BOONE, NC	us	28607
02501	TELEDYNE INDUSTRIES INC	LOS ANGELES, CA	us	90067
02556	MONTROSE PRODUCTS CO	AUBURN, MA	us	01501
02567	OMTRONICS MFG INC	OMAHA, NE	us	68105
02569	CRYSTALONICS, DIV TELEDYNE	CAMBRIDGE, MA	us	02140
02572	TELEDYNE THERMATICS	ELM CITY, NC	us	27822
02574	RLC ELECTRONICS INS	MT KISCO, NY	us	10549
02577	HAMLIN INC	LAKE MILLS, WI	us	53551
02582	CLAROSTAT MFG CO INC	DOVER, NH	us	03820
02598	UNITRODE CORP	WATERTOWN, MA	us	02172
02693	NATIONAL WIRE & STAMPING INC	ENGLEWOOD, CO	us	80110
02698	THERMALLOY INC	DALLAS, TX	us	75234
02619	SOLITRON DEVICES INC (DIODES)	TAPPAN, NY	us	10983
02634	SPRAGUE ELECTRIC SEMICON DIV	CONCORD, NH	us	03301
02664	SEMTECH CORP	NEWBURY PARK, CA	us	91320
92668	EDISON ELEK DIV MCGRAW-EDISON	MANCHESTER, NH	us	03136
92675	AMERICAN COMPONENTS INC	CONSHOHOCKEN, PA	us	19428
02682	ITT SEMICONDUCTORS DIV	TUSTIN, CA	us	92680
32685	LOBAUGH ROLLIN J	SOUTH SAN FRANC, CA	US	94080
02686	WATKINS-JOHNSON CO	PALO ALTO, CA	us	94304
32688	MICROSEMI CORP	SCOTSDALE, AZ	us	85252
32696	CORNING GLASS WORKS ELEK PROD DIV	CORNING, NY	us	14836
32796	WARD LEONARD HAGERSTOWN DIV	HAGERSTOWN, MD	us	21740
32713	GENERAL INSTRUMENT CORP (DIODE)	HICKSVILLE, NY	us	11802
32718	VALOR ELECTRONICS INC	SANTA ANA, CA	us	92705
12734	AMETEK INC RODAN DIV	ANAHEIM, CA	us	92806
32739	MINI-CIRCUITS LAB	BROOKLYN, NY	us	11235
02744	ELEC-TROL INC	SAUGUS, CA	us	91350
12761	FENWAL ELECTRONICS INC	SADDLE BROOK, NJ	us	07662
02763	TELEDYNE SEMICONDUCTOR	MOUNTAIN VIEW, CA	us	94043
02771	ANSLEY ELECTRIC	LOS ANGELES, CA	us	90032
12788	M/A-COM INC	BURLINGTON, MA	us	01893
12798	CORNING ELECTRONICS	RALEIGH, NC	us	27604
12803	COD1 SEMICONDUCTOR	LINDEN, NJ	us	07410
02805	COOPER INDUSTRIES INC	HOUSTON, TX	us	77210
02813	U S CAPACITOR CORP	BURBANK, CA	us	91564
12826	DENNISON MFG CO	FRAMINGHAM, MA	us	01701
02856	MOHAWK SPRING CO INC	ARLINGTON HEIGH, IL	US	60008
02865	ALPHA INDUSTRIES INC	WOBURN, MA	us	01801
12877	ANGSTROHM PRECISION INC	VAN NUYS, CA	us	91405
02883	SILICONIX INC	SANTA CLARA, CA	us	95054
02910	SIGNETICS CORP	SUNNYVALE, CA	us	94086
02923	CHOMERICS INC	WOBURN, MA	us	01801

Analyze Repair Inc.

Table 2. Manufacturers Code List (continued)

Mfr Code	Manufacturer Name	Address	Country	ZIP Cod
02928	VISHAY INTERTECHNOLOGY INC	MALVERN, PA	us	1935
02937	VOLTRONICS CORP	HANOVER, NJ	us	0793
02946	DUPONT E I DE NEMOURS & CO	WILMINGTON, DE	us	1986
02995	MEPCO/CENTRALAB INC	RIVIERA, FL	us	3340
03038	INTL RECTIFIER CORP	LOS ANGELES, CA	us	9006
03122	EMCON DIV ITW	SAN DIEGO, CA	us	9212
03123	MICRO-OHM CORP	EL TORO, CA	us	9263
03171	SOLITRON DEVICES INC	PALM BEACH, FL	us	3340
D3172	TRW MICROWAVE	SUNNYVALE, CA	us	9408
03174	ANZAC ELEK DIV ADAMS-RUSSEL CO INC	WALTHAM, MA	us	0215
03266	DUPONT CONNECTOR SYSTEMS	CAMP HILL, PA	us	1701
03232	PRODUCT COMPONENT CORP	MT VERNON, NY	us	1055:
03239	WAVETEK	SAN DIEGO, CA	us	9211:
03257	M-TRON INDUSTRIES INC	YANKTON, SD	us	5707
03259	STANFORD APPLIED ENGINEERING	SANTA CLARA, CA	us	9505
03263	ELECTRONIZED CHEMICALS CORP	BURLINGTON, MA	us	0180
D3273	GOWANDA ELECTRONICS CORP	GOWANDA, NY	us	1407
03282	GENERAL CABLE CORP	NEW YORK, NY	us	1001
33285	ANALOG DEVICES INC	NORWOOD, MA	us	0206;
03291	AVANTEK INC	SANTA CLARA, CA	us	95054
13292	CORNING GLASS WORKS	CORNING, NY	us	1483c
13297	EMC TECHNOLOGY INC	CHERRY HILL, NJ	us	08034
03316	SPECIALTY CONNECTOR CO	FRANKLIN, IN	us	46131
03317	AEG-TELEFUNKEN CORP	ENGLEWOOD, NJ	us	07632
13334	NV PHILIPS ELCOMA	EINDHOVEN	NE	02876
03352	SWISS AUTOMATICS INC	COLUMBUS, NE	us	68661
03371	USM CORP NYLOK FASTENER DIV	TORRANCE, CA	us	99501
03380	GRIES/DYNACAST CO DIV COATES-CLARK	NEW ROCHELLE, NY	us	10802
03389	VARADYNE INC	SANTA MONICA, CA	us	90404
03394	METHODE ELECTRONICS INC	CHICAGO, IL	us	60656
03395	MEPCO/CENTRALAB INC	WEST PALM BEACH, FL	US	33407
03406	NATIONAL SEMICONDUCTOR CORP	SANTA CLARA, CA	us	95052
13412	CORNING GLASS WORKS (WILMINGTON)	WILMINGTON, NC	us	28401
13418	MOLEX INC	LISLE, IL	us	60532
03428	NONOTUCK MFG CO	HADLEY FALLS, MA	us	01075
03441	F-DYNE ELECTRONICS CO	BRIDGEPORT, CT	us	06605
03521	JOHANSON DIELECTRICS INC	BURBANK, CA	us	91510
13530	STACKPOLE COMPONENT CO	RALEIGH, NC	us	27620
13545	TELEDYNE PHILBRICK NEXUS	DEDHAM, MA	us	02026
8594	CARTER SEMICONDUCTORS	LOWELL, MA	us	01850
3621	M/A-COM CABLEWAVE MINI PROD	BURLINGTON, MA	us	01803
3627	SOLID STATE DEVICES INC	LA MIRADA, CA	us	90638
3647	INSTRUMENT SPECIALTIES CO INC	DEL WATER GAP, PA	us	07424
3651	MEPCO/ELECTRA CORP	SAN DIEGO, CA	us	92121
3658	ALPHA IND MICROELECTRONICS DIVISION	COLMAR, PA	us	18915
03706	WEST-CAP ARIZONA	SAN FERNANDO, CA	us	91340

Analyzer Repair Inc.

Table 2. Manufacturers Code List (continued)

Mfr Code	Manufacturer Name	Address	Country	ZIP Code
03714	INTERSIL INC	CUPERTINO, CA	CA	95014
03724	BIVAR INC	SANTA ANA, CA	us	92705
03740	ERIE TECH PROD INC ERIE FREQ CONT	CARLISLE, PA	us	17013
03744	BOURNS INC	RIVERSIDE, CA	us	9250
03746	SPECTRUM CONTROL INC	ERIE, PA	us	1650
03747	COLORADO CRYSTAL CORP	LOVELAND, CO	us	8053
33762	TELETECH CORP	BOZEMAN, MT	us	5977
33793	SILICON GENERAL INC	SAN JOSE, CA	us	9513
23794	ADVANCED MICRO DEVICES INC	SUNNYVALE, CA	us	9408
03795	MOTOROLA INC	FRANKLIN PARK, IL	us	6913
13799	HARRIS CORP	MELBOURNE, FL	us	3290
13811	INTEL CORP	SANTA CLARA, CA	us	9505
03827	FAIR RITE PRODUCTS CORP	WALLKILL, NY	us	1258
03849	MICROSYSTEMS INTERNATIONAL LTD	OTTAWA	CN	
03910	GENERAL ELECTRIC CO	PHILADELPHIA, PA	us	1912
03923	SIEMENS CORP	ISELIN, NJ	us	0883
03938	MIDLAND-ROSS CORP	CLEVELAND, OH	us	4411:
13972	OHMITE MFG CO	SKOKIE, IL	us	6007
03973	HP DIV 45 NMD	SANTA ROSA, CA	us	95401
04068	LABINAL COMPONENTS & SYSTEMS INC	ELK GROVE VILLA, IL	US	6000
14078	SGS-THOMSON MICROELECTRONICS INC	PHOENIX, AZ	us	8502:
04092	MONOLITHIC MEMORIES INC	SANTA CLARA, CA	us	95054
14121	SEMICONDUCTOR CIRCUITS INC	HAVERHILL, MA	us	0183
04150	VICLAN INC	SAN DIEGO, CA	us	921%
04169	SANGAMO ELECTRIC CO	SPRINGFIELD, IL	us	62702
04181	AHAM-TOR	RANCHO, CA	us	91702
04182	SHALLCROSS INC	NORTHBROK, IL	us	60062
04290	SPRAGUE ELECTRIC CO	LEXINGTON, MA	us	02173
04294	SPS TECHNOLOGIES	NEWTOWN, PA	us	18940
04213	STIMPSON EDWIN B CO INC	BROOKLYN, NY	us	11705
04225	THOMAS & BETTS CORP	RARITAN, NJ	us	08869
04234	DELBERT BLINN CO	POMONA, CA	us	91766
04261	INSULECTRO CORP	BURLINGAME, CA	us	94010
04314	VLN CORP VICTOREEN INSTRUMENT DIV	CLEVELAND, OH	us	44103
04379	AMETEK INC	PAOLI, PA	us	19301
04393	CENTRE ENGINEERING INC	STATE COLLEGE, PA	US	16801
04418	ALLEN MFG CO	HARTFORD, CT	us	96101
04423	G.E. CERAMICS, INC.	CHATTANOOGA, TN	us	37405
04458	BLILEY ELECTRIC CO	ERIE, PA	us	16508
04464	BRAND REX CO	WILLIMANTIC, CT	us	06226
04475	CAMBRIDGE THERMIONIC CORP	CAMBRIDGE, MA	us	02138
04486	ITT CORP	NEW YORK, NY	us	10022
04492	CENTRALAB INC	MILWAUKEE, WI	us	53209
04504	GENERAL INSTRUMENT CORP	CLIFTON, NJ	us	07012
04507	TRW INC	CLEVELAND, OH	us	44124
04514	DOW CORNING CORP	MIDLAND, MI	us	48641

Analyzer Repair Inc.

Table 2. Manufacturers Code List (continued)

Mfr Code	Manufacturer Name	Address	Country	ZIP Cod
04522	ELECTRO MOTIVE CORP	FLORENCE, SC	us	0622
04550	GENERAL ELECTRIC CO	FAIRFIELD, CT	us	0643
04563	ERIE TECHNOLOGICAL PRODUCTS INC	ERIE, PA	us	1651
04564	ESSEX INTERNATIONAL INC	FORT WAYNE, IN	us	4680
04567	ITT HARPER DIV	CHICAGO, IL	us	60601
04568	BECKMAN INDUSTRIAL CORP	FULLERTON, CA	us	9263
04581	BARWOOD MFG CORP	EVERETT, MA	us	0214
04605	FISCHER SPECIAL MFG CO	CINCINNATI, OH	us	4520
D4615	J F D ELECTRONICS CORP	BROOKLYN, NY	us	1121
D4645	SIGNALITE DIV GENERAL INST CORP	NEPTUNE, NJ	us	0775:
D4648	PIEZO CRYSTAL CO	CARLSILE, PA	us	1701:
34670	EF JOHNSON CO	WASECA, MN	us	5609:
34672	TRW INC PHILADELPHIA DIV	PHILADELPHIA, PA	us	1910
14703	LITTELFUSE INC	DES PLAINES, IL	us	6001f
14719	MARWEDEL C W	SAN FRANCISCO, CA	US	9410:
14726	3M CO	ST PAUL, MN	us	55144
14733	BELL INDUSTRIES INC MILLER JW DIV	COMPTON, CA	us	90224
)4757	OAK SWITCH SYSTEMS INC	CRYSTAL LAKE, IL	us	60014
)4776	POTTER & BRUMFIELD INC	PRINCETON, IN	us	47671
)4805	ILLINOIS TOOL WORKS INC SHAKEPROOF	ELGIN, IL	us	60126
)4821	TILLEY MFG CO	MORGAN HILL, CA	us	94070
)4822	STACKPOLE CARBON CO	ST MARYS, PA	us	15857
)4828	TINNERMAN PRODUCTS INC	CLEVELAND, OH	us	44101
)4830	STEWART STAMPING CORP	YONKERS, NY	us	10704
)4853	VARFLEX CORP	ROME, NY	us	13440
)4880	ZIERICK MFG CO	MT KISCO, NY	us	10549
)4935	MEPCO ELECTRA CORP	MORRISTOWN, NJ	us	07960
4939	SCHNITZER ALLOY PRODUCTS CO	ELIZABETH, NJ	us	07206
14977	ITT CORP COMPONENTS DIV	NEW YORK, NY	us	10022
)4990	GRAYHILL INC	LA GRANGE, IL	us	60525
)5016	MONITOR PRODUCTS CO INC	OCEANSIDE, CA	us	92054
)5065	TEXAS INSTRUMENTS INC	ATTLEBORO, MA	us	02703
)5088	VARO INC	GARLAND, TX	us	75046
5098	VICTORY ENGINEERING CORP	SPRINGFIELD, NJ	us	07081
5108	KULKA-SMITH INC	MANASQUAN, NJ	us	08736
5131	ELECTRONIC DEVICES INC	YONKERS, NY	us	10710
15160	VRN INTERNATIONAL	ST PETERSBURG, FL	US	337ia
)5176	AMERICAN SHIZUKI CORP	CANOGA PARK, CA	US	91304
)5232	BRADY W H CO	MILWAUKEE, WI	us	53209
)5293	PRECISION METAL PRODUCT CO	STONEHAM, MA	us	02180
15347	UNIMICA	NEW YORK, NY	us	10013
15350	WILMINGTON FIBRE SPECIALTY CO	NEW CASTLE, DE	us	19720
15364	LITTON PRECISION PROD INC	VAN NUYS, CA	us	91409
15368	FCP INC	OLATHE, KS	us	66062
)5400	REESE J RAMSEY INC	NEW YORK, NY	us	10007
)5436	BURRBROWN CORP	TUCSON, AZ	us	85706

Analyzer Repair Inc.

Table 2. Manufacturers Code List (continued)

Mfr Code	Manufacturer Name	Address	Countr	ZIP Code
05447	BERGQUIST CO	MINNEAPOLIS, MN	us	5542(
0545.3	ICO-RALLY CORP	SUNNYVALE, CA	us	9430:
05461	ITT HARPER INC	MORTON GROVE, IL	us	6005:
05466	EMHART CORP	FARMINGTON, CT	us	0603:
05507	MILLER DIAL & NAMEPLATE CO	EL MONTE, CA	us	9173-
05518	AUGAT INC	MANSFIELD, MA	us	02041
05524	DALE ELECTRONICS INC	COLUMBUS, NE	us	68601
05535	KEYSTONE ELECTRONICS CORP	NEW YORK, NY	us	1001:
05545	NATIONAL TEL TRONICS CORP	YONKERS, NY	us	10701
0555a	ALPHA WIRE CORP	ELIZABETH, NJ	us	07207
05568	JACOBSON MFG CO INC	KENILWORTH, NJ	us	07033
05583	UNIFORM TUBES	COLLEGEVILLE, PA	us	19426
0562:3	CAMDEN WIRE CO INC	CAMDEN, NY	us	13316
05630	WESTON COMPONENTS	ARCHBALD, PA	us	18403
05648	MAGNECRAFT ELECTRIC CO	CHICAGO, IL	us	60630
05661L	ALCO ELECTRONIC PRODUCTS INC	NORTH ANDOVER, MA	us	31645
05661]	VITRAMON INC	MONROE, CT	us	06468
05683	WECKESSER CO INC	CHICAGO, IL	us	30641
05704	SAN FERNANDO ELECTRIC MFG CO	SAN FERNANDO, CA	us	31341
05742	P C A ELECTRONICS INC	SEPULVEDA, CA	us	X343
05768	MALCO-A MICRODOT CO	PASADENA, CA	us	91030
05769	ITT SEALECTRO CORP	TRUMBULL, CT	us	06611
05792	INTL ELECTRONIC RESEARCH CORP	BURBANK, CA	us	91502
05809	MARSHALL IND CAPACITOR DIV	MONROVIA, CA	us	91016
05826	AMER PRCN IND INC DELEVAN DIV	AURORA, NY	us	14052
05879	AMPHENOL CORPORATION	DANBURY, CT	us	06810
05917	RIFA AB	STOCKHOLM	SW	S-163
05943I	TEXAS INSTRUMENTS DEUTSCHLAND GMBH	FREISING	GM	8050
35946	VALVO GMBH	HAMBURG	GM	2000
35951	WICKMANN-WERKE A G	WITTEN-ANNEN	GM	5870
15959	MARQUARDT GMBH	RIETHEIM	GM	D-720
05967	WTM A/S	GLOSTRUP	DK	2080
15982	CELDUC CONSTR ELECTRIQUES DU CENTRE	SORBIERS	FR	42
15985	SESCOSEM	SAINT EGREVE	FR	'5781
15992	EFCO COMPOSANTS	NANTERRE	FR	
15993	CORNING GLASS EUROPE SOVCOR	LE VESINET	FR	
16003	SESCOSEM (63)	PARIS	FR	'5781
16032	STC/STANTEL	DEVON	EG	
06039	SEALECTRO LTD	'ORTSMOUTH	EG	
06058E	30URNS TRIMPOT LTD	MIDDLESEX	EG	
06118	ROEDERSTEIN/RESISTA GMBH	LANDSHUT	GM	8300
06121	SIEMENS AG	MUNICH	GM	8000
06127	WIMA	MANNHEIM	GM	6800
06252	AB ELEKTRONIK GMBH	SALZBURG	AU	L-501
06328	SCHURTER AG	LUZERN	SW	CH-60
06330	CONDENSATEURS FRIBOURG S A	FRIBOURG	SW	

Analyzer Repair Inc.

Table 2. Manufacturers Code List (continued)

Mfr Code	Manufacturer Name	Address	Country	ZIP Cod
06337	PHILLIPS GLOEILAMPENFABRIEKEN N V	EINDHOVEN	HL	
96344	FUJITSU MICROELECTRONICS INC	SANTA CLARA, CA	us	9505
06347	HITACHI AMERICA LTD	SUNNYVALE, CA	us	9408
06352	TDK CORPORATION OF AMERICA	SKOKIE, IL	us	6007
06354	TOSHIBA CORP	TOKYO	JP	
06424	E-SIL COMPONENTS LTD	SUNDERLAND	EG	SR4
06501	BARBER & COLEMAN LTD	SALE CHES	EG	
06563	SIEMENS CORP COMPONENTS GROUP	SCOTTSDALE, AZ	us	8525
06650	AEG-TELEFUNKEN	HEILBRONN	GM	71oc
06665	SAMTEC	NEW ALBANY, IN	us	4715(
06784	MIDWEST COMPONENTS	MUSKEGON, MI	us	4944:
06857	TRAK MICROWAVE CORP	TAMPA, FL	us	3361-
06860	HUBER & SUHNER AG	HERISAU	SW	
06900	JUDD WIRE	BURLINGTON, MA	us	0180:
26916	SONY CORP	TOYKO	JP	141
16951	TRW RESISTIVE PRODUCTS DIV	CORPUS CHRISTI, TX	US	78411
17041	R.A.F. ELECTRONIC HARDWARE INC	STRATFORD, CT	us	06497
17050	MICRO POWER SYSTEMS	SANTA CLARA, CA	us	95050
17158	EATON CORP	CLEVELAND, OH	us	44144
07179	AAVID ENGINEERING INC	LACONIA, NH	us	03245
07221	SUPERTEX INC	SUNNYVALE, CA	us	94086
07284	PAKTRON DIV ITW	VIENNA, VA	us	2218C
07338	J K L COMPONENTS CORP	LOS ANGELES, CA	us	90064
07379	SAN-O INDUSTRIAL CORP	BOHEMIA LI, NY	us	1171E
07398	BEL FUSE INC	JERSEY CITY, NJ	us	07302
07477	AMERICAN OIL & SUPPLY CO	NEWARK, NJ	us	07105
07766	LA RADIOTECHNIQUE COMPELEC	VILLEVRBANNE	FR	
07798	REMTEK CORP	SUNNYVALE, CA	us	
18097	SPRAGUEGOODMAN ELECTRONICS	NEW HYDE PARK, NY	US	11040
18113	KAHGAN ELECTRONICS CORP	HEMPSTEAD, NY	us	11550
18123	COIL-Q CORP	BRONXVILLE, NY	us	
18259	DALE ELECTRONICS INC	TEMPE, AZ	us	85252
18261	STAR MICRONICS INC	NEW YORK, NY	us	
18335	SOURIAU INC	SAUGUS, CA	us	95203
18369	FILECA	STE GENEVIEVE	FR	
18560	OXLEY DEV LTD	CUMBRIA	EG	
18666	PANEL COMPONENTS CORP	SANTA ROSA, CA	us	
18709	PANASONIC INDUSTRIAL CO	SECAUCUS, NJ	us	07094
18778	MADISON CABLE CORP	WORCHESTER, MA	us	01603
18779	MITSUBISHI ELECTRONICS AMERICA	SUNNYVALE, CA	us	94086
18781	CATALYST RESEARCH CORP	BALTIMORE, MD	us	
18810	ROCKWELL INTERNATIONAL	ANAHEIM, CA	us	
18838	AND (ALPHA NUMERIC DISPLAYS)	BURLINGAME, CA	us	
18852	METELICS CORP	SUNNYVALE, CA	us	
19043	GLOW-LITE DIV OF DUTCH BOY	PAULS VALLEY, OK	us	
19050	XENELL	WYNNEWOOD, OK	us	

Analyzer Research Inc.

Table 2. Manufacturers Code List (continued)

Mfr Code	Manufacturer Name	Address	Country	ZIP Code
09126	ASJ PTE LTD	JURONG TOWN	SG	
99171	RHOMBUS INDUSTRIES INC	HUNTINGTON BEACH, CA	US	92649
09226	NEC ELECTRONICS INC	SANTA CLARA, CA	us	
09235	FOX ELECTRONICS	FT MEYERS, FL	us	3391c
09283	TOPAZ SEMICONDUCTOR	SAN JOSE, CA	us	95132
09441	APPLIED ENGINEERING PRODUCT CO	HAMDEM, CT	us	
99448	WAMCO INC	FOUNTAIN VALLEY, CA	us	
09454	PRECISION RESISTIVE PRODS INC	MEDIAPOLIS, IA	us	5263
09507	HP DIV 53 SAD	ROHNERT PARK, CA	us	9492
D9538	TUSONIX	TUCSON, AZ	us	8574
D9694	ELECTRONIC ESSENTIALS	WOODSIDE, NY	us	
99849	NDK AMERICA INC	CUPERTINO, CA	us	5401
39855	KOWASANGYO CORP	TOKYO	JP	
39859	CERA-MITE CORP	GRAFTON, WI	us	5302
09862	HITACHI CABLE LTD	TOKYO	JP	
19914	UNITRODE CORP	LEXINGTON, MA	us	
09939	MURATA ERIE NORTH AMERICA INC	SMYRNA, GA	us	30081
09955	BOYD CORP	DENVER, CO	us	
10183	TADIRAN	TEL-AVIV	IS	
10200	ELECTRONIC CONCEPTS INC	EATONTOWN, NJ	us	
10290	COMMODORE SEMICONDUCTOR GROUP	NORRISTOWN, PA	us	
10302	CENTENNIAL PLASTICS	YELLVIELLE, AR	us	
LO358	VOGT AG	LOSTORF	GM	
10401	NEW SYSTEMS MOLDING CORP	LOVELAND, CO	us	80531
10407	LSI LOGIC CORP	MILPITAS, CA	us	95031
10421	EPSON	TORRENCE, CA	us	
10443	HP DIV 64 NID	CORVALLIS, OR	us	
10456	PLASTEC PRODUCTS INC	FORT COLLINS, CO	us	
10457	JERMYN INDUSTRIES LTD (63)	KENT SEVENOAKS	EG	
10481	DALE ELECTRONICS INC	NORFOLK, NE	us	68701
10549	SCI MANUFACTURING INC	HUNTSVILLE, AL	us	35805
10572	XICOR, INC	MILPITAS, CA	us	
10631	GASKET SPECIALTIES	BRISBANE, CA	us	
10784	SHINNITTOKU ELECTRIC CO LTD	MINATO-KU TOKYO	JP	145
10795	STANDEX - PAUL SMITH DIVISION	CINCINNATI, OH	us	
10858	LINEAR TECHNOLOGY CORP	MILPITAS, CA	us	95035
10881	THOMSON-CSF	COURBEVOIE	FR	
10905	FIRA	LYON	FR	
11047	TEKA PRODUCTS INC	WOODSIDE, NY	us	
11111	SEEQ TECHNOLOGY INC	SAN JOSE, CA	us	
11171	SYNERGY MICROWAVE CORP	FAIRFIELD, NJ	us	
11187	VLSI TECHNOLOGY INC	SAN JOSE, CA	us	95131
11212	INDUCTOR SUPPLY, INC.	HUNTINGTON BEACH, CA	US	
11248	MICRON DIV OF R G ALLEN CO INC	NORTH HOLLYWOOD, CA	US	
11263	W GUNTHER GMBH	NURNBERG	GM	
11298	AVEL-LINDBURG	DANBURY	CT	

Analyzer Repair Inc.

Table 2. Manufacturers Code List (continued)

Mfr Code	Manufacturer Name	Address	Countr	ZIP Code
11345	CYPRESS SEMICONDUCTOR CORP	SAN JOSE, CA	US	95134
11357	BRISTOL ROYAL WORKSHOP BLIND	BRISTOL	EG	
11412	ISOLANTITE MFG COMPANY INC	STIRLING, NJ	us	
11421	KYOCERA CORPORATION	KYOTO	JP	
11599	MICRO-COAX COMPONENTS, INC	COLLEGEVILLE, PA	us	1942(
11677	SARONM	PALO ALTO, CA	us	
11684	JOSLYN DEFENSE SYSTEMS INC	BURLINGTON, VT	us	0540:
11686	KYUSHU DENTSU CO LTD	NAGASAKI	JP	
11699	CENTRAL SEMICONDUCTOR CORP	HAUPPAUGE, NY	us	11788
11703	POWER GENERAL	CANTON, MA	us	
11708	THOMSON SEMICONDUCTORS	VELIZY VILLACOU	FR	78140
11723	CTL COMPONENTS LTD	LONDON	EG	SW19
11781	MIDLAND-ROSS CORP	LIVINGSTON, NJ	us	07039
11841	ELECTREY S A	MONTERREY	MX	64000
11892	EVOX/RIFA INC	LINCOLNSHIRE, IL	us	60015
11920	IMIYAMA DENSEN CO LTD	TOKYO	JP	
11946	IBKC INTERNATIONAL ELECTRONICS	LAWRENCE, MA	us	01841
11961	ALEXCO ENGINEERING SUPPLIES	COWDENBEATH	EG	KY4 9
11981	IPOWEREX	YOUNGWOOD, PA	us	15697
12125	SAMSUNG SEMICONDUCTOR INC	SANTA CLARA, CA	us	95054
12127	IRF MONOLITHICS INC	DALLAS, TX	us	75234
12131	PRESIDIO COMPONENTS INC	SAN DIEGO, CA	us	92121
12186	DALLAS SEMICONDUCTOR CORP	DALLAS, TX	us	75244
22131	STACKPOLE ELECTRONICS INC	RALEIGH, NC	us	27620
22611	ERIE SPECIALTY PRODUCTS INC	ERIE, PA	us	16512
23400	KEMET ELECTRONICS CORPORATION	GREENVILLE, SC	us	29606
23556	INTERCONNECTION PRODUCTS INC	SANTA ANA, CA	us	92707
23822	ILATTICE SEMICONDUCTOR CORP	BEAVERTON, OR	us	97006
23951	PEI MICROWAVE, INC.	SUNNYVALE, CA	us	94086
24180	OWL WIRE AND CABLE	CANASTATA, NY	us	13032
24560	WIRE PRO INC	SALEM, NJ	us	D8079
24655	INTERNATIONAL POWER DEVICES	BRIGHTON, MA	us	32135
24730	AVX-RALEIGH DIVISION	RALEIGH, NC	us	27604
24820	BRADFORD ELECTRONICS INC	BRADFORD, PA	us	16701
25130	BUNNELL PLASTICS, INC	MICKLETON, NJ	us	08056
25160	MICROTRONICS ASSOCIATES PTE LTD	SINGAPORE	SG	1334
25800	SOUTH AMERICAN DEVELOPMENT CO	HYDE PARK, NY	us	12538
26560	BEYSCHLAG GMBH	HEIDE	GM	
27030	CHAMPION TECHNOLOGIES INC	FRANKLIN PARK, IL	us	60131
28300	KETEMA	BENSALEM, PA	us	19020
28450	VVARTH INTERNATIONAL LTD	EAST GRINSTEAD	EG	RH192
28960	DOWKEY MICROWAVE INC	VENTURA, CA	us	93003

Analyzer Repair Inc.

PLUG TYPE *	CABLE HP PART NUMBER	PLUG DESCRIPTION	CABLE LENGTH CM (INCHES)	CABLE COLOR	FDR USE IN COUNTRY
250V 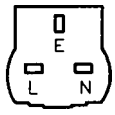	8120–1351 8120–1703	Straight**BS1363A 90°	229 (90) 229 (90)	Mint Gray Mint Gray	Great Britain, Cyprus. Nigeria Rhodesia. Singapore, So.Africa, Indi
250V 	8120-1369 8120–0696 9	Straight**NZSS198/ASC112 0 '	201 (79) 221 (87)	Gray Gray	Australia, New Zealond
250V 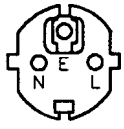	8120-1689 8120-1692	Straight**CEE7–Y11 90°	201 (79) 201 (79)	Mint Gray Mint Gray	East and West Europe, Saudi Arabia. United Arab Republic (unpolarized in many notions)
125V 	8120–1348 8120–1398 9 8120–1754	Straight**NEMA5–15P 0 ' Straight**NEMA5–15P	203 (80) 203 (80) 91 (36)	Black Black Black	United States Canada, Japan (100 V or 200 V), Mexico, Phillipines. Taiwan
	8120–1378 8120–1521 8120–1676	Straight**NEMA5–15P 90° Straight**NEMA5–15P	203 (80) 203 (80) 91 (36)	Jade Gray Jade Gray Jade Gray	
250V 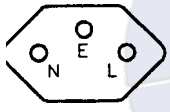	8120–2104	Straight**SEV1011 1959-24507 Type 12	201 (79)	Gray	Switzerlond
220V 	8120–0698	Straight**NEMA6–15P			
250V 	8120-1860	Straight**CEEE22–VI			

* E = Earth Ground: L = Line; N = Neutral.
** Part number for plug is industry identifier for plug only. Number shown far cable is HP Part Number for complete cable, including plug.

Table 3. AC Power Cables Available

Analyzer Repair Inc.

Table 4. IF-Display Section, Major Assemblies

Reference Designato	HP Part Number	Cl	Qt	Description	Mfr Code	Mfr Part Number
A1A1	85662-60001	1	1	BOARD ASSEMBLY, KEYBOARD	28480	856626000:
A1A2	85662-6010(	1	1	BOARD ASSEMBLY, Z AXIS AMPLIFIER (SERIAL NUMBER PREFIXES: 2403A-3001A)	28480	85662-6010(
A1A2	85662-60236	4	1	BOARD ASSEMBLY, XYZ DRIVER AMPLIFIER (SERIAL NUMBER PREFMES: 3004A AND ABOVE)	28480	85662-6023(
A1A3	85662-60059	9	1	BOARD ASSEMBLY, HIGH VOLTAGE REGULATOR (SERIAL NUMBER PREFMES: 2403A-3001A)	28480	85662-6005(
A1A3	85662-60233	1	1	BOARD ASSEMBLY, HIGH VOLTAGE REGULATOR (SERIAL NUMBER PREFIXES: 3004A AND ABOVE)	28480	556626023:
A1A3A1	5062-7089	6	1	HIGH VOLTAGE MODULE (SERIAL NUMBER PREFIXES: 3004A AND ABOVE)	28480	5062-7089
A1A4	85662-60057	7	1	BOARD ASSEMBLY, X DEFLECTION AMPLIFIER [SERIAL NUMBER PREFIXES: 2403A-3001A)	28480	3566260055
A1A5	85662-60057	7	1	BOARD ASSEMBLY, Y DEFLECTION AMPLIFIER (SERIAL NUMBER PREFIXES: 2403A-3001A)	18480	85662-60057
A1A6	85662-60101	2	1	BOARD ASSEMBLY, ±15V REGULATOR (SERIAL NUMBER PREFIXES: 2403A-3001A)	28480	3566260101
A1A6	85662-60232	0	1	BOARD ASSEMBLY, HIGH VOLTAGE POWER SUPPLY (SERIAL NUMBER PREFIXES: 3004A AND ABOVE)	18480	3566266232
A1A7	55662-60052	2	1	BOARD ASSEMBLY, +100V, +5.2V REGULATOR (SERIAL NUMBER PREFIXES: 2403A-3001A)	28480	85662-60052
A1A7	35662-60235	3	1	BOARD ASSEMBLY, +100V, +5.2V REGULATOR SERIAL NUMBER PREFIXES: 3004A AND ABOVE)	18480	85662-60235
A1A8	35662-60133	0	1	BOARD ASSEMBLY, RECTIFIER (SERIAL NUMBER PREFIXES: 2403A-2813A)	28480	85662-60133
A1A8	35662-60204	6	1	BOARD ASSEMBLY, RECTIFIER (SERIAL NUMBER PREFIXES: 2816A-3001A)	28480	85662-60204
A1A8	35662-60234	2	1	BOARD ASSEMBLY, RECTIFIER (SERIAL NUMBER PREFIXES: 3004A AND ABOVE)	28480	85662-60234
A1A9	35662-60056	6	1	BOARD ASSEMBLY, BUS TRANSITION	28480	81566260056
A1A10	35662-60050	0	1	BOARD ASSEMBLY, DISPLAY MOTHERBOARD	28480	81566260050
A1A11	0960-0383	8	1	HIGH VOLTAGE MULTIPLIER (SERIAL NUMBER 2403A - 3001A)	28480	0960-0383
A3A1	1566260014	6	1	BOARD ASSEMBLY, TRIGGER (SERIAL NUMBER PREFIXES: 2403A-3001A)	28480	85662-60014
A3A1	85662-60244	4	1	BOARD ASSEMBLY, TRIGGER (SERIAL NUMBER PREFIXES: 3004A AND ABOVE)	18480	81566260244
A3A2	85662-60025	9	1	BOARD ASSEMBLY, INTENSITY CONTROL (SERIAL NUMBER PREFIXES: 2403A-3001A)	28480	85662-60025

Table 4. IF-Display Section, Major Assemblies (continued)

Reference Designato	HP Part Number	CD	Qty	Description	Mfr Code	Mfr Part Number
A3A2	856626024:	5	1	BOARD ASSEMBLY, INTENSITY CONTROL (SERIAL NUMBER PREFIXES: 3004A AND ABOVE)	28480	85662-6024:
A3A3	85662-6012:	3	1	BOARD ASSEMBLY, LINE GENERATOR	28480	85662-6012:
A3A4	856626012:	0	1	BOARD ASSEMBLY, MEMORY	28480	:656626012:
A3A5	8566260141	4	1	BOARD ASSEMBLY, DATA MANIPULATOR	28480:	85662-6014:
A3A6	85662-60146	5	1	BOARD ASSEMBLY, MAIN CONTROL	28480	85662-6014(
A3A7	8566260125	2	1	BOARD ASSEMBLY, INTERFACE	28480	85662-6012:
A3A8	85662-6013(	7	1	BOARD ASSEMBLY, ANALOG-DIGITAL CONVERTER	28480	:35662-601X
A3A9	8566260151	2	1	BOARD ASSEMBLY, TRACK AND HOLD (SERIAL NUMBER PREFIXES: 2403A-2534A)	28480	:35662-60151
A3A9	8566260165	8	1	BOARD ASSEMBLY, TRACK AND HOLD (SERIAL NUMBER PREFIXES: 2541A AND ABOVE)	28480	85662-60165
A3A10	35662-60015	7	1	BOARD ASSEMBLY, DIGITAL STORAGE MOTHERBOARD	28480	:35662-60015
A4A1	3566260122	7	1	BOARD ASSEMBLY, VIDEO PROCESSOR	18480	85662-60122
A4A2	3566260132	9	1	BOARD ASSEMBLY, LOG AMPLIFIER-DETECTOR (SERIAL NUMBER PREFIXES: 2403A-2517A)	18480	85662-60132
A4A2	3566260166	9	1	BOARD ASSEMBLY, LOG AMPLIFIER-DETECTOR [SERIAL NUMBER PREFIXES: 2534A AND ABOVE)	18480	:15662-60166
A4A3	3566260009	9	1	BOARD ASSEMBLY, LOG AMPLIFIER-FILTER (SERIAL NUMBER PREFIXES: 2403A-3001A)	28480	85662-60009
A4A3	35662-60246	6	1	30ARD ASSEMBLY, LOG AMPLIFIER-FILTER (SERIAL NUMBER PREFIXES: 3001A AND ABOVE)	18480	:1566260246
A4A4	35662-60142	1	1	30ARD ASSEMBLY, BANDWIDTH FILTER (SERIAL NUMBER PREFIXES: 2403A-2648A)	28480	85662-60142
A4A4	1566260184	1	1	30ARD ASSEMBLY, BANDWIDTH FILTER (OPTION 162) (SERIAL NUMBER PREFIXES: 2542A AND ABOVE)	28480	:15662-60184
A4A4	1566260189	6	1	30ARD ASSEMBLY, BANDWIDTH FILTER (SERIAL NUMBER PREFIXES: 2810A AND ABOVE)	28480	85662-60189
A4A5	1566260139	6	1	30ARD ASSEMBLY, STEP GAIN	18480	85662-60139

Analyzer Depot Inc.

Table 4. IF-Display Section, Major Assemblies (continued)

Reference Designato	HP Part Number	CD	Qty	Description	Mfr Code	Mfr Part Number
A4A5	85662-60172	7	1	BOARD ASSEMBLY, STEP GAIN (OPTION 067)	28480	85662-6017:
A4A6	85662-60018	0	1	ASSEMBLY, DOWN/UP CONVERTER (INCLUDES A4A6A1 UP CONVERTER AND A4A6A2 DOWN CONVERTER)	28480	85662-60018
A4A6	85662-60177	2	1	ASSEMBLY, OUTPUT DRIVER/INPUT BUFFER (OPTION 067)(INCLUDES A4A6A1 INPUT BUFFER AND A4A6A2 OUTPUT DRIVER)	2848C	85662-60177
A4A6A1	85662-60006	6	1	BOARD ASSEMBLY, UP CONVERTER (PART OF A4A6 DOWN/UP CONVERTER)	28480	85662-60006
A4A6A1	85662-60171	6	1	BOARD ASSEMBLY, INPUT BUFFER (OPTION 067) (PART OF A4A6 OUTPUT DRIVER/INPUT BUFFER)	28480	85662-60171
A4A6A2	85662-60005	5	1	BOARD ASSEMBLY, DOWN CONVERTER (PART OF A4A6 DOWN/UP CONVERTER)	28480	85662-60005
A4A6A2	85662-60170	5	1	BOARD ASSEMBLY, OUTPUT DRIVER (OPTION 067) (PART OF A4A6 OUTPUT DRIVER/INPUT BUFFER)	28480	85662-60170
A4A7	85662-60004	4	1	BOARD ASSEMBLY, 3 MHz BANDWIDTH FILTER	28480	85662-60004
A4A7	85662-60174	9	1	BOARD ASSEMBLY, 3 MHz BANDWIDTH FILTER (OPTION H96)	28480	85662-60174
A4A7	85662-60186	3	1	BOARD ASSEMBLY, 3 MHz BANDWIDTH FILTER (OPTION 462)	28480	85662-60186
A4A8	85662-60131	8	1	BOARD ASSEMBLY, ATTENUATOR-BANDWIDTH FILTER (SERIAL NUMBER PREFIXES: 2403A-2648A)	28480	35662-60131
A4A8	85662-60185	2	1	BOARD ASSEMBLY, ATTENUATOR-BANDWIDTH FILTER (OPTION 462) (SERIAL NUMBER PREFIXES: 2542A AND ABOVE)	28480	85662-60185
A4A8	85662-60190	9	1	30ARD ASSEMBLY, ATTENUATOR-BANDWIDTH FILTER (SERIAL NUMBER PREFIXES: 2810A AND 4BOVE)	28480	85662-60190
A4A9	$5662-60147	6	1	30ARD ASSEMBLY, IF CONTROL (SERIAL NUMBER PREFIXES: 2403A-2810A)	18480	85662-60147
A4A9	85662-60169	2	1	30ARD ASSEMBLY, IF CONTROL (OPTION 067) SERIAL NUMBER PREFIXES: 2542A-2810A)	28480	35662-60169
A4A9	15662-60173	8	1	30ARD ASSEMBLY, IF CONTROL (OPTION H96) SERIAL NUMBER PREFIXES: 2517A-2810A)	28480	35662-60173

Analyzer Repair Inc.

Table 4. IF-Display Section, Major Assemblies (continued)

Reference Designator	HP Part Number	CD	Qty	Description	Mfr Code	Mfr Part Number
A4A9	85662-60187	4	1	BOARD ASSEMBLY, IF CONTROL (OPTION 462) (SERIAL NUMBER PREFMES: 2542A-2813A)	28480	85662-60187
A4A9	85662-60200	2	1	BOARD ASSEMBLY, IF CONTROL (OPTION 067) (SERIAL NUMBER PREFIXES: 2813A-2816A)	28480	85662-60200
A4A9	8566260201	3	1	BOARD ASSEMBLY, IF CONTROL (OPTION H96) (SERIAL NUMBER PREFIXES: 2813A-2816A)	28480	3566260201
A4A9	856626020	4	1	BOARD ASSEMBLY, IF CONTROL (SERIAL NUMBER PREFMES: 2813A-2816A)	28480	85662-60202
A4A9	3566260211	5	1	BOARD ASSEMBLY, IF CONTROL (OPTION 462) (SERIAL NUMBER PREFIXES: 2813A-2816A)	28480	8566260211
A4A9	8566260222	8	1	BOARD ASSEMBLY, IF CONTROL (SERIAL NUMBER PREFIXES: 2848A AND ABOVE)	28480	85662-60222
A4A9	856626022	9	1	BOARD ASSEMBLY, IF CONTROL (OPTION 462) (SERIAL NUMBER PREFIXES: 2848A AND ABOVE)	28480	85662-60223
A4A9	85662-60224	0	1	BOARD ASSEMBLY, IF CONTROL (OPTION 067) (SERIAL NUMBER PREFIXES: 2848A AND ABOVE)	28480	85662-60224
A4A9	5566260225	1	1	BOARD ASSEMBLY, IF CONTROL (OPTION H96) (SERIAL NUMBER PREFIXES: 2848A AND ABOVE)	28480	55662-60225
A4A10	8566260145	8	1	BOARD ASSEMBLY, IF-VIDEO MOTHERBOARD	28480	55662-60149

Analyzer Repair Inc.

Table 5. IF-Display Section Cables

Reference Designato	HP Part Number	CD	Qty	Description	Mfr Code	Mfr Part Number
W1	85662-60068	0	1	CABLE ASSEMBLY, A1A1 TO A1A10 (RIBBON CABLE)	2848(	85662-6006(
w 2	85662-60068	0	1	CABLE ASSEMBLY, A3A10 TO A1A10 (RIBBON CABLE. PART OF A3 INTERCONNECT)	2848(	85662-6006(
w 3	85662-6006:	4	1	CABLE ASSEMBLY, A1A10 TO A3A10 (A3 POWER)	2848(	85662-6006:
w 4	85662-6006:	5	1	CABLE ASSEMBLY, A1A10 TO A4A10	2848(	85662-6006:
w 5	85662-6007:	7	1	CABLE ASSEMBLY, A1A10 TO A1A9	2848(	85662-6007:
W 6	85662-60064	6	1	CABLE ASSEMBLY, A1A4 TO A1V1 (X DEFLECTION) (SERIAL NUMBER PREFIXES: 2403A-3001A)	2848C	8 5 6 6 2 - m
w 7	85662-60064	6	1	CABLE ASSEMBLY, A1A5 TO A1V1 (Y DEFLECTION) (SERIAL NUMBER PREFIXES: 2403A-3001A)	2848C	85662-60064
W8	8120-2607	1	1	CABLE ASSEMBLY, 50-WIRE RIBBON, A1A9 TO A1A1/A3A10/A4A10 (INSTRUMENT BUS)	2848C	8120-2607
W9	85662-60066	8	1	CABLE ASSEMBLY, A1A1 TO A3A10, (RIBBON CABLE)	2848C	8 5 6 6 2 - m
W11	85662-60043	1	1	CABLE ASSEMBLY, COAX 9, A3A9 TO A3A2	28480	85662-6004:
w13	85662-60103	4	1	CABLE ASSEMBLY, COAX 1, A4A1 TO REAR PANEL J7 (RECORDER OUTPUTS: VIDEO)	28480	85662-60103
w14	85662-60102	3	1	CABLE ASSEMBLY, COAX 3, A4A1 TO REAR PANEL J7 (RECORDER OUTPUTS: SWEEP)	28480	85662-6010;
W15	55662-60104	5	1	CABLE ASSEMBLY, COAX 2, A4A2 TO REAR PANEL J11 (21.4 MHZ IF OUTPUT)	28480	8566260104
W16	55662-60032	8	1	CABLE ASSEMBLY, COAX 0 REAR PANEL J1 TO A3A8 (SWEEP IN)	28480	85662-60032
W17	85662-60033	9	1	CABLE ASSEMBLY, COAX 93, REAR PANEL J1 TO A4A1 (AUX SWEEP INPUT)	18480	8 5 6 6 2 - m
W18	55662-60031	7	1	CABLE ASSEMBLY, COAX 6, A4A2 TO REAR PANEL J1 (COUNTER OUTPUTS)	18480	85662-60031
W19	35662-60030	6	1	CABLE ASSEMBLY, COAX 97, REAR PANEL J1 TO A4A8 (21.4MHZ IF INPUT)	18480	85662-60030
W21	35662-60070	4	1	CABLE ASSEMBLY, A1A3 TO A1V1 (CRT REAR CONNECTOR) (SERIAL NUMBER PREFIXES: 2403A-3001A)	18480	85662-60070
N21	35662-60237	5	1	CABLE ASSEMBLY, A1A3/A1A2 TO A1V1 (CRT REAR CABLE HARNESS) (SERIAL NUMBER PREFIXES: 3004A AND ABOVE)	28480	85662-60237

Analyzer Repair Inc.

Table 5. IF-Display Section Cables (continued)

Reference Designator	HP Part Number	CD	Qty	Description	Mfr Code	Mfr Part Number
W23	8566260029	3	1	CABLE ASSEMBLY, COAX 1, A3A10 TO A1A10 (X DEFLECTION)	28480	85662-6002s
W24	8566260039	5	1	CABLE ASSEMBLY COAX 1, A3A10 TO A1A10 (Y DEFLECTION)	28480	85662-60039
W25	8566260037	3	1	CABLE ASSEMBLY, COAX 84, A1A10 TO REAR PANEL J9 (RECORDER OUTPUTS: PENLIFT)	28480	85662-60037
W26	85662-60038	4	1	CABLE ASSEMBLY COAX 85 A1A10 TO REAR PANEL Jlo (EXT TRIGGER INPUT)	28480	85662-60038
W27	8566260031 6	2	1	CABLE ASSEMBLY COAX 82, A1A10 TO REAR PANEL J5 (DISPLAY OUTPUT Z)	28480	85662-60036
W28	85662-60034	0	1	CABLE ASSEMBLY, COAX 83, A1A10 TO REAR PANEL J3 (DISPLAY OUTPUT X)	28480	85662-60034
w29	856626003, 5	1	1	CABLE ASSEMBLY, COAX 81, A1A10 TO REAR PANEL J4 (DISPLAY OUTPUT Y)	28480	85662-60035
W30	856626009: 3	1	1	CABLE ASSEMBLY, IF-DISPLAY SECTION TO RF SECTION (COAX INTERCONNECT)	28480	85662-60093
w31	8566260221D	2	1	CABLE ASSEMBLY, IF-DISPLAY SECTION TO RF SECTION (50 PIN INSTRUMENT BUS - INTERCONNECT)	28480	6566240220
W32	85662-60044	2	1	CABLE ASSEMBLY, COAX 86, A1A10 TO REAR PANEL J6 (DISPLAY OUTPUT BLANK)	18480	85662-60044
W33	8566260111B	1	1	CABLE ASSEMBLY, COAX 89 A4A6 TO REAR PANEL J13 (IF INP)	18480	85662-60118
w34	85662-60119	2	1	CABLE ASSEMBLY, COAX 87, A4A6 TO REAR PANEL J12 (IF OUT)	18480	85662-60119
w35	8566260121D	5	1	CABLE ASSEMBLY, COAX 7, A4A1 TO REAR PANEL J14 (VIDEO OUT)	18480	85662-60120
W36	856626012' 1	6	1	CABLE ASSEMBLY, COAX 96, A3A9 TO REAR PANEL J15 (VIDEO INP)	18480	85662-60121
w37	85660-60117	0	8	CABLE ASSEMBLY, COAX 8, IF OUT TO IF INP	18480	85660-60117
W38	85660-60117	0	8	CABLE ASSEMBLY, COAX 8, VIDEO OUT TO VIDEO	18480	85660-60117

Analyzer Repair Inc.

Table 6. RF Section Miscellaneous Parts

Reference Designato	HP Part Number	C l	Qty	Description	Mfr Code	Mfr Part Number
A1T1	9100-4009	0	1	TRANSFORMER	28480	9100-4009
A1V1	85662-6024	7	1	CRT - P31 PHOSPER COATING (SERIAL NUMBER PREFIXES: 2403A-3001A)	28480	85662-6024
A1V1	2090-0225	4	1	CRT (SERIAL NUMBER PREFIXES 3004A AND ABOVE)	28480	2090-0225
A1V1MP1	4320-0311	0	1	CRT SHOCK MOUNT	2848O	4320-0311
A1V1MP2	0905-0573	2	1	CRT REAR GASKET	2848O	0905-0573
A1V1MP3	01332-6600	8	1	TRACE ALIGN COIL	2848O	01332-6600
A1V1MP4	01701-6600	5	1	ORTHO COIL	28480	01701-6600
A1V1MP5	8500-2163	7	5	THIN-FILM CLEANER FOR CLEANING EM1 CRT SHIELD	28480	8500-2163
131	3160-0298	1	1	FAN-SKL 72-CFM 115V 50/60/400-HZ 1.5-THK (OPTION 400 ONLY)	18480,	3160-0298
131	35662-6021S	3	1	FAN-SKL 115V 5O/60-HZ 1	184808	35662-6021S
Cl	1160-4065	5	1	ZAPACITOR-FXD .lUF ±20% 25OVAC (RMS)	28480	0160-4065
C2	1160-2636	2	1	ZAPACITOR-FXD 470PF ±20% 3KVDC CER	28480	0160-2636
C3	0160-2636	2	1	ZAPACITOR-FXD 470PF ±20% 3KVDC CER	28480	0160-2636
F1	2110-0007	4	1	'USE 1A 250V SLO-BLO 1.25X.25 ULIEC	28480	2110-0007
F1	2110-0006	3	1	FUSE 2A 250V SLO-BLO 1.25X.25 UL	2848O	2110-0006
FL1	0960-0448	6	1	LINE MODULE FILTER	28480	0960 0448
FL1TB1				LINE MODULE FILTER TERMINAL BOARD - NOT SEPARATELY REPLACEABLE, PART OF FL1		
Jl	1251-7498	8	1	CONNECTOR, S-PIN F D SERIES	28480	1251-7498

Analyzer Repair Inc.

Table 6. RF Section Miscellaneous Parts (continued)

Reference Designator	HP Part Number	CD	Qty	Description	Mfr Code	Mfr Part Number
J2				PART OF A1A9-SEE A1A9J2		
J3				PART OF W28 (DISPLAY OUTPUT X)		
J4				PART OF W29 (DISPLAY OUTPUT Y)		
35				PART OF W27 (DISPLAY OUTPUT Z)		
J6				PART OF W32 (DISPLAY OUTPUT BLANK)		
J7				PART OF W14 (RECORDER OUTPUTS: SWEEP)		
J8				PART OF W13 (RECORDER OUTPUTS: VIDEO)		
J9				PART OF W25 (RECORDER OUTPUTS: PENLIFT)		
J10				PART OF W26 (EXT TRIGGER INPUT)		
J11				PART OF W15 (21.4 MHZ IF OUTPUT)		
J12				PART OF W34 (IF OUT)		
J13				PART OF W33 (IF INP)		
J14				PART OF W35 (VIDEO OUT)		
J15				PART OF W36 (VIDEO INP)		

Analyzer Repair Inc.

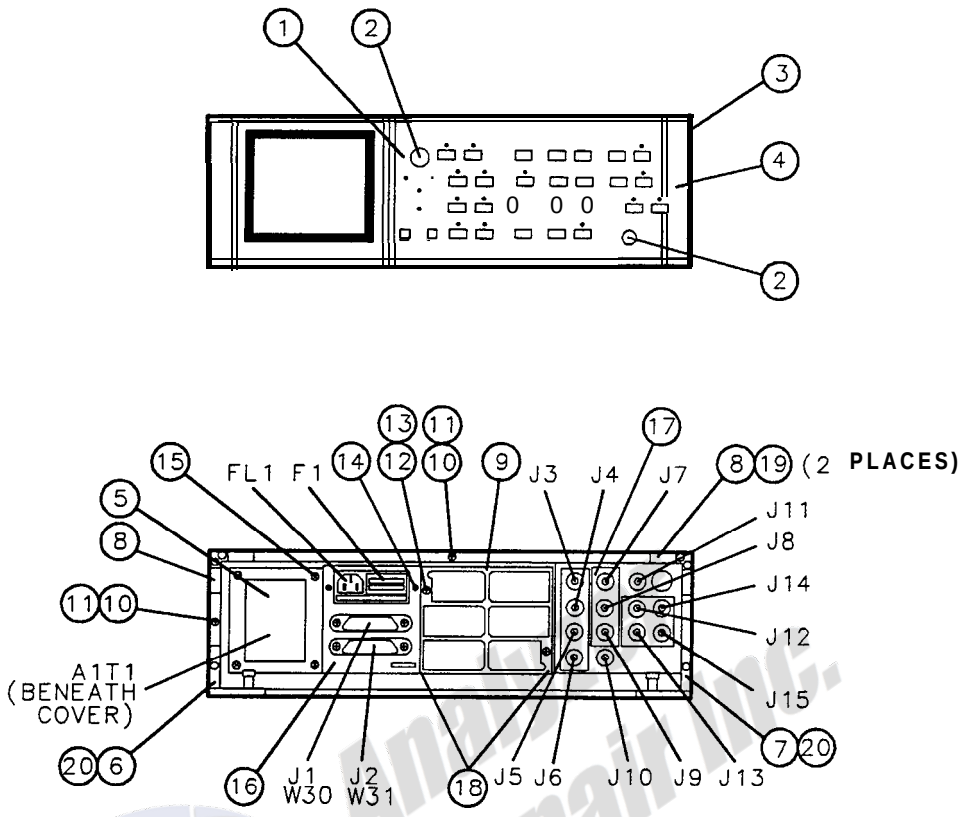

NOTE: FOR IF/RF SECTION INTERCONNECT CABLES (W30, W31), SEE TABLE 4.

Figure 1. IF-Display Section Parts Identification, Front and Back View (1 of 2)

Analog Repair Inc.

Item	HP Part Number	CD	Description	Mfr Code	Mfr Part Number
1	85662-00097	9	FRONT DRESS PANEL, STANDARD	28480	856620009
	85662-00098	0	FRONT DRESS PANEL, OPTION H96	28480	856620009
	85662-00099	1	FRONT DRESS PANEL, OPTION 067	28480	856620009
	85662-00100	5	FRONT DRESS PANEL, OPTION 462	28480	856620010
2	0370-1005	2	KNOB, BASE POINTER	28480	0370-1005
3	5021-8403	4	FRONT FRAME *	28480	5021-8403
	5020-8803	2	FRONT FRAME **	28480	5020-8803
4	85662-20222	4	MAINFRAME BEZEL	28480	856622022
5	7100-0114	8	TRANSFORMER COVER	28480	7100-0114
6	5021-8539	7	LOWER LEFT LOCK FOOT	28480	5021-8539
7	5021-8537	5	LOWER RIGHT LOCK FOOT	28480	5021-8537
8	5041-8821	2	UPPER FOOT, LEFT/RIGHT	28480	5041-8821
9	86701-00007	7	GUARD FAN	28480	86701-0000
10	05X-1245	6	COVER SCREW, MTG 6-32 .460-IN-LG *	28480	0515-1245
	0570-1171	7	COVER SCREW, M3.5 X 0.6 X12 **	28486	0570-1171
11	0510-0043	4	RETAINER RING FOR SCREW (10) *	28480	0510-0043
	0510-1253	0	RETAINER RING FOR SCREW (10) **	28480	0510-1253
12	2360-0219	9	SCREW, 6-32, 1.375-IN-LG PAN HD	28480	2360-0219
13	2190-0018	5	LOCK WASHER	28480	2190-0018
14	2200-0109	8	SCREW, 4-40,.438-IN-LG PAN HD	28480	2200-0109
15	2510-0137	9	SCREW, 8-32, 2.75-IN-LG PAN HD	28480	2510-0137
16	85662-20093	7	REAR PANEL, LEFT	28480	856622009:
17	85662-00071	9	REAR PANEL, RIGHT	28480	85662-0007
18	86701-20002	8	COWLING, FAN (2) (BENEATH FAN)(OPT 400)	28480	86701-2000
19	05X-1232	5	SCREW, METRIC 3.5 X 8, PAN HD *	28480	0515-1232
	2360-0119	8	SCREW, 632, .438-IN-LG PAN HD **	28480	2360-0119
20	0515-1244	9	SCREW, METRIC 3.5 X 12, PAN HD *	28460	0515-1244
	2360-0121	2	SCREW, 632, .500-IN-LG PAN HD **	28480	2360-0121
A1T1			REFER TO TABLE 6 OF THIS TAB		
F1L1			REFER TO TABLE 6		
F1			REFER TO TABLE 6		
J1-J15			REFER TO TABLE 6		
W30			REFER TO TABLE 5		
W31			REFER TO TABLE 5		

* Serial Numbers: 2517A09288 and Above
** Serial Numbers: 2403A06183 to 2403A09287

Figure 1. IF-Display Section Parts Identification, Front and Back View (2 of 2)

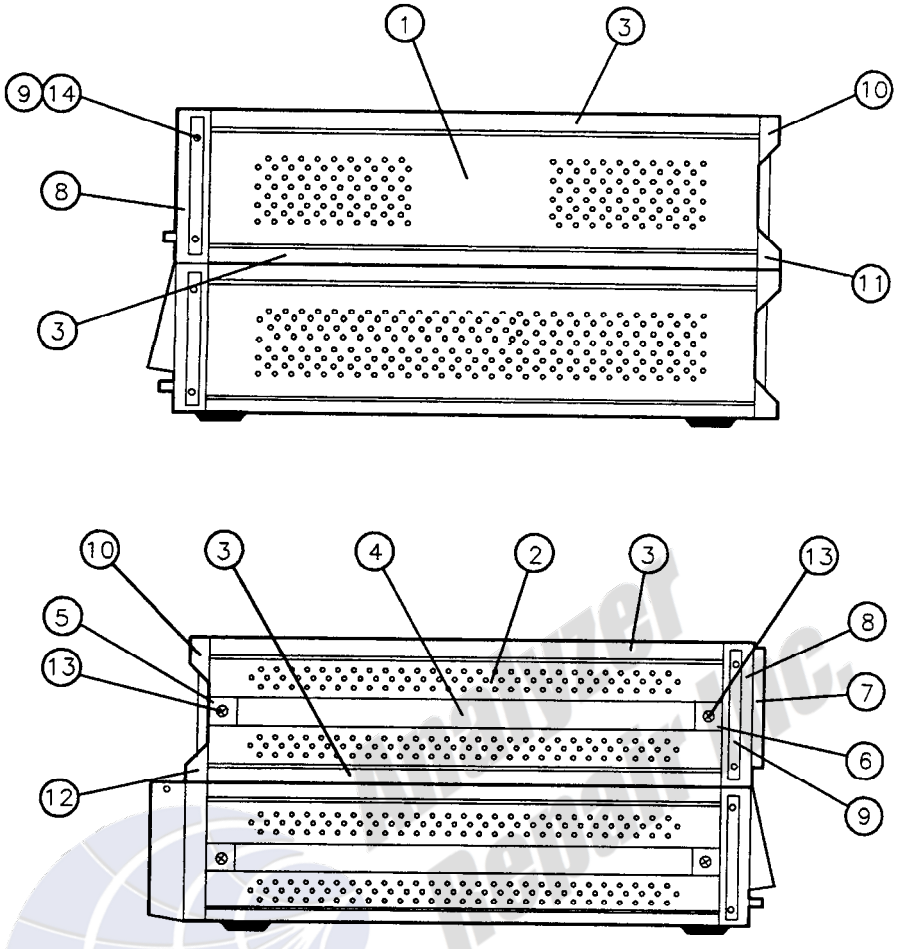

Figure 2. IF-Display Section Parts Identification (1 of 2)

Item	HP Part Number	CD	Description	Mfr Code	Mfr Part Number
1	5062-3812	5	PERFORATED SIDE COVER *	28480	5062-3812
	5060-9912	4	PERFORATED SIDE COVER **	28480	5060-9912
2	5062-3837	4	PERFORATED SIDE COVER *	28480	50623837
	5060-9937	3	PERFORATED SIDE COVER **	28480	5060-9937
3	5062-3735	1	18 INCH COVER *	28480	50623735
	5060-9835	0	18 INCH COVER **	28480	5060-9835
4	5062-3704	4	18 INCH STRAP HANDLE ASSEMBLY	28480	50623704
5	5041-8820	1	REAR STRAP HANDLE COVER *	28480	5041-8820
	5040-7220	1	REAR STRAP HANDLE COVER **	28480	5040-7220
6	5041-8819	8	FRONT STRAP HANDLE COVER *	28480	5041-8819
	5040-7219	8	FRONT STRAP HANDLE COVER **	28480	5040-7219
7	5040-5401	6	CRT BEZEL	28480	5040-5401
3	5021-8403	2	FRONT FRAME *	28480	5021-8403
	5020-8803	6	FRONT FRAME **	28480	5020-8803
9	5041-8802	9	TRIM STRIP	28480	5041-8802
L0	5041-8821	2	REAR FOOT	28480	5041-8821
l1	5021-8539	7	LEFT LOCK FOOT	28480	5021-8539
l2	5021-8537	5	RIGHT LOCK FOOT	28480	5021-8537
l3	0515-1132	4	SCREW, M5 X 10 FLAT HD *	28480	0515-1132
	2680-0172	1	SCREW, 10-32 .375-IN-LG FLAT HD **	28480	2680-0172
14	0515-0896	5	SCREW, M4 X 10 FLAT HD *	28480	0515-0896
	2510-0195	9	SCREW, 6-32 .375 IN-LG FLAT HD **	28480	2510-0195

* Serial Numbers: 2517A09288 to 3001A18536

** Serial Numbers: 2403A06183 to 2403A09287

Analyzer Repair Inc.

Figure 2. IF-Display Section Parts Identification (2 of 2)

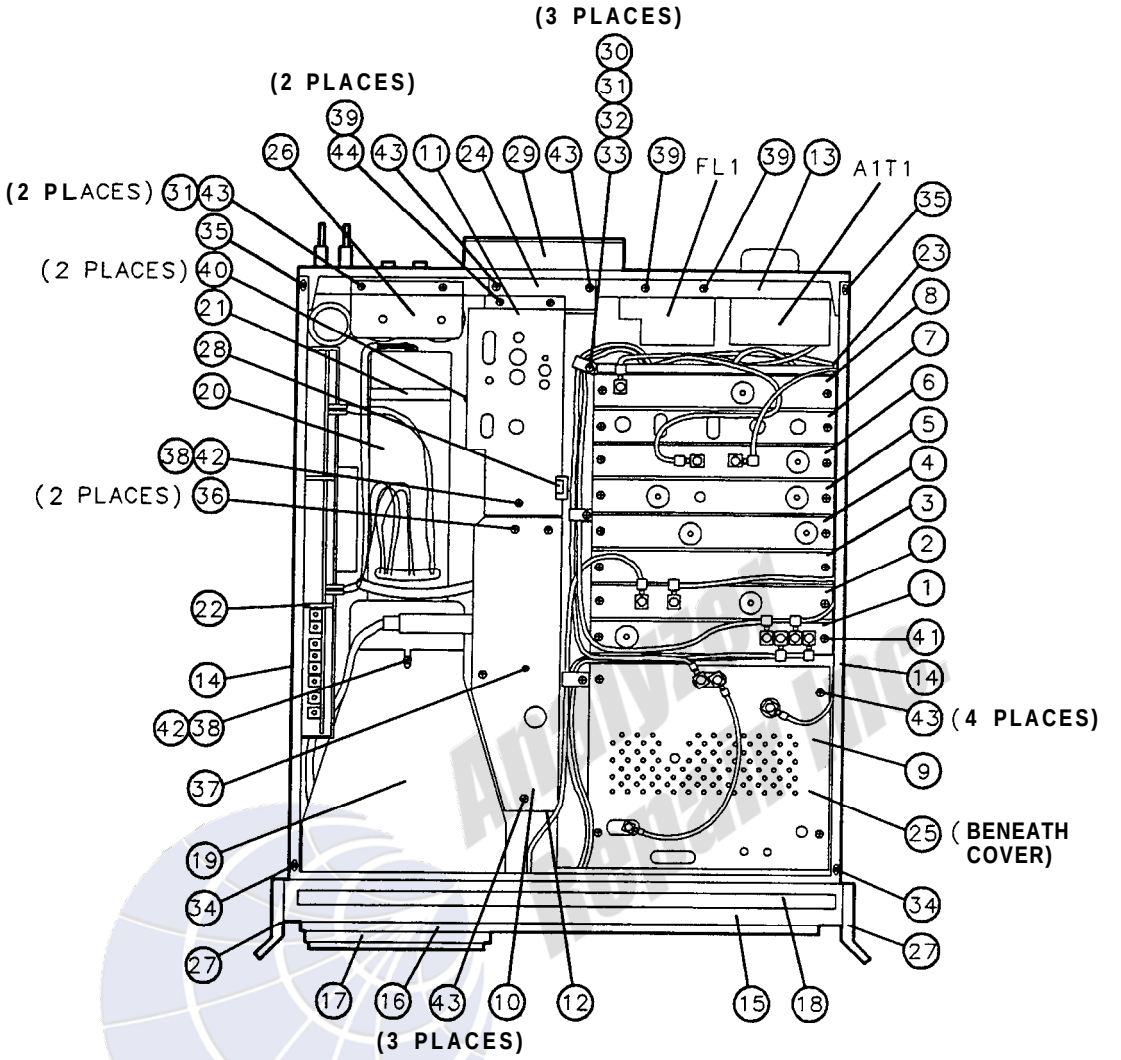

Figure 3. IF-Display Section Parts Identification, Top View (Serial Number Prefixes: 2403A to 3001A) (1 of 3)

Item	HP Part Number	CD	Description	Mfr Code	Mfr Part Number
1	856622004:	5	COVER, A4A1 ASSEMBLY	28480	85662-20041
2	85662-2004(	4	COVER, A4A2 ASSEMBLY	28480	85662-20040
3	856622003:	9	COVER, A4A3 ASSEMBLY	28480	85662-2003 7
4	856622015:	0	COVER, A4A4 ASSEMBLY	28480	85662-2015: 3
5	85662-2014{	3	COVER, A4A5 ASSEMBLY	28480	85662-20148
6	85662-200X	1	COVER, A4A6 ASSEMBLY	28480	85662-20038
7	8566220034	6	COVER, A4A7 ASSEMBLY, STANDARD	28480	85662-20034
	8566220161	0	COVER, A4A7, BLANK, OPTION 067	2848C)	85662-2016:1
8	85662-2003{	0	COVER, A4A8 ASSEMBLY	2848C)	85662-200313
9	856620007:	3	COVER, DIGITAL STORAGE	2848C)	85662-00075
10	8566200036	6	COVER, HV SUPPLY	2848C)	85662-000363
11	85662-0004{	1	SHROUD, AIRDUCT (VOLTAGE REGULATOR COVER)	2848C)	85662-00049
12	8566200052	6	COVER, SIDE, HV	2848C)	85662-0005:2
	8566200035	5	HV SUPPLY HOUSING	28480	85662-00035
13	85662-20164	3	REAR FRAME *	28480	85662-2016s1
	8566220030	2	REAR FRAME **	28480	85662-20030
14	5021-5837	2	CORNER STRUT, 18 INCH *	28480	5021-5837
	5020-8882	1	CORNER STRUT, 18 INCH **	18480	5020-8882
15	5021-8403	4	FRONT FRAME *	18480	5021-6403
	5020-8803	6	FRONT FRAME **	18480	5020-8803
16	3566220222	4	MAINFRAME BEZEL	18480	85662-20222
17	5040-5401	6	CRT BEZEL	28480	5040-5401
18	5041-8802	9	TOP TRIM	28480	5041-8802
19	01332-60602	3	FRONT CRT SHIELD	28480	01332-60602
20	35662-00076	4	REAR CRT SHIELD	28480	35662-00076
21	35662-00077	5	CRT SHIELD CLAMP	28480	35662-00077
	5040-8061	0	CRT SHIELD SUPPORT (BENEATH 21)	28480	5040-8061
22	1566200037	7	AMPLIFIER SHIELD	28480	35662-00037
	1566200038	8	AMPLIFIER SHIELD DIVIDERS (ATTACHED TO 22)	28480	35662-00038

* Serial Numbers: 2517A09288 and Above
** Serial Numbers: 2403A06183 to 2403A09287

Analyzer Repair Inc.

Figure 3. IF-Display Section Parts Identification, Top View (Serial Number Prefixes: 2403A to 3001A) (2 of 3)

This page intentionally left blank.

Analyzer Repair Inc.

Item	HP Part Number	CD	Description	Mfr Code	Mfr Part Number
23	85662-20092	6	IF HOUSING CASTING	28480	856622009
24	85662-00046	8	PC BOARD BRACKET	28480	85662-0004
25	85662-60099	7	DIGITAL STORAGE SHIELD ASSEMBLY (BENEATH COVER (9))	28480	856626009
26	8566200041	3	BRACKET, DUAL CAPACITOR	28480	856620004
	8566200062	8	BRACKET, TRI-CAPACITOR (OPTION 400)	28480	856620006
27	50623989	7	FRONT HANDLES *	28480	5062-3989
	5060-9899	6	FRONT HANDLES **	28480	5060-9899
28	85662-00040	2	CAPACITOR BRACKET	28480	85662-0004(
29	8670100007	1	GUARD, FAN	28480	86701-0000'
30	2360-0117	6	SCREW, 632, .375-IN-LG PAN HD	28480	2360-0117
31	30501260	6	WASHER, FLAT .147-ID 6	28480	3050-1260
32			NOT USED		
33	1400-1276	5	CABLE CLAMP, .312-DIA,.375 WIDE	28480	1400-1276
14	0515-1331	5	SCREW, M4 X 6 FLAT HD *	28480	0515-1331
	2510-0192	6	SCREW, 8-32.25 IN-LG 100 DEG FLAT HD **	28480	2510-0192
15	05X-1331	5	SCREW, M4 X 6 FLAT HD *	28480	0515-1331
	2510-0195	9	SCREW, 8-32.375 IN-LG 100 DEG FLAT HD **	28480	2510-0195
16	23660115	4	SCREW, 632, .312-IN-LG PAN HD	28480	2360-0115
17	85662-20042	6	GUIDE, HV, NYLON	28480	8566220042
18	3050-0105	6	WASHER-FLAT MTLC NO.4 .125-IN-ID	28480	3050-0105
19	2360-0113	2	SCREW, 632, .25-IN-LG PAN HD	28480	2360-0113
0	2360-0344	1	SCREW, 6-32, 2.37-IN-LG PAN HD	28480	2360-0344
1	2200-0109	8	SCREW, 4-40, .438-IN-LG	28480	2200-0109
2	2200-0103	2	SCREW, 440, .25-IN-LG PAN HD	28480	2200-0103
3	2360-0113	2	SCREW, 632, .25-IN-LG PAN HD	28480	2360-0113
4	3050-1260	6	WASHER, FLAT, .147-ID6	28480	3050-1260
.1T1			REFER TO TABLE 6 OF THIS TAB		
L1			REFER TO TABLE 6 OF THIS TAB		

* Serial Numbers: 2517A09288 and Above
'* Serial Numbers: 2403A06183 to 2403A09287

Figure 3. IF-Display Section Parts Identification, Top View (Serial Number Prefixes: 2403A to 3001A) (3 of 3)

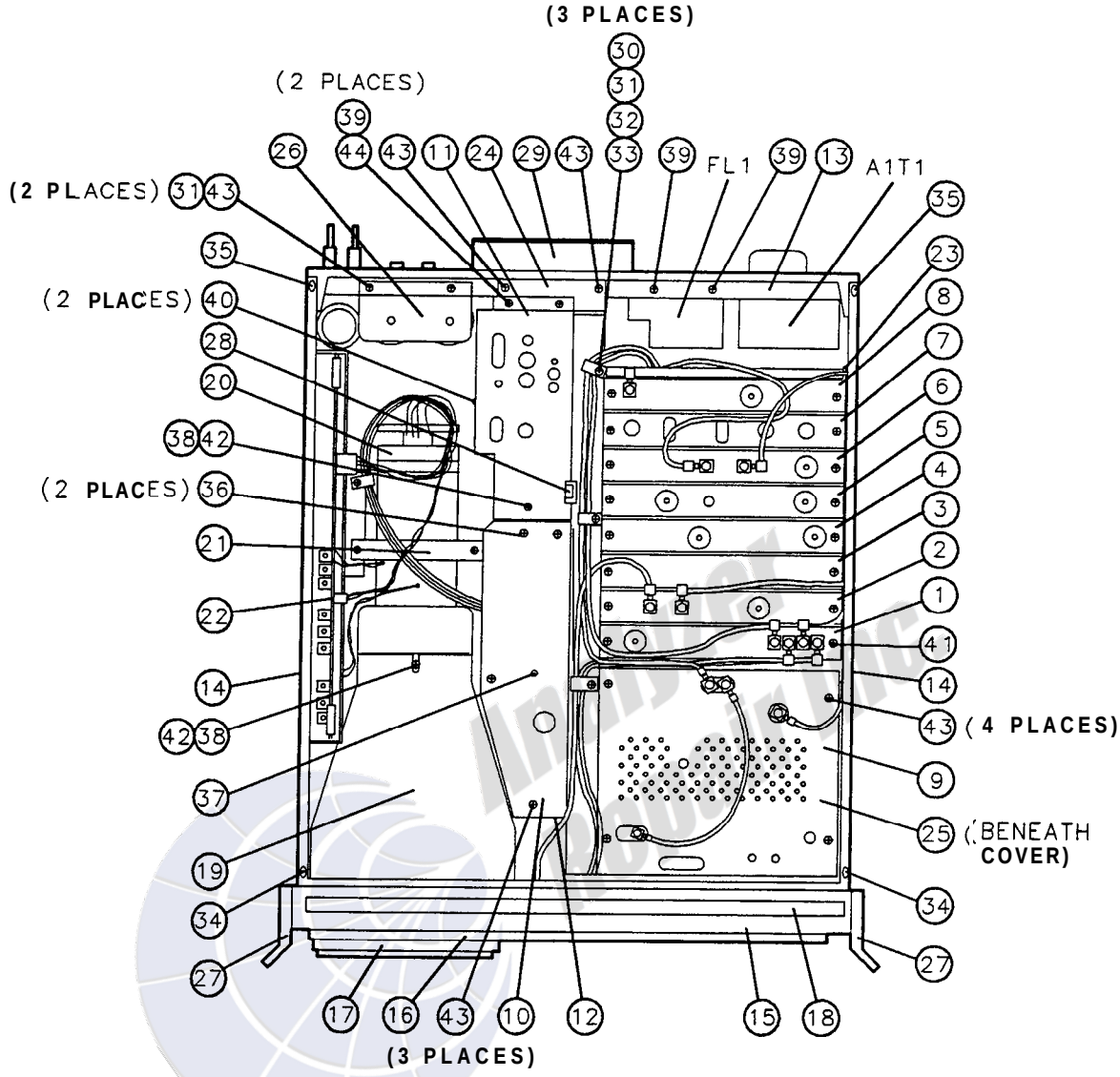

Item	HP Part Number	CD	Description	Mfr Code	Mfr Part Number
1	8566220041	5	COVER, A4A1 ASSEMBLY	28480	85662-20041
2	85662201040	4	COVER, A4A2 ASSEMBLY	28480	85662-20040
3	8566220037	9	COVER, A4A3 ASSEMBLY	28480	85662-20037
4	8566220153	0	COVER, A4A4 ASSEMBLY	28480	85662-20153
5	8566220148	3	COVER, A4A5 ASSEMBLY	28480	85662-20148
6	8566220039	1	COVER, A4A6 ASSEMBLY	28480	85662-20039
7	8566220034	6	COVER, A4A7 ASSEMBLY, STANDARD	28480	85662-20034
	8566220161	0	COVER, A4A7, BLANK, OPTION 067	28480	85662-20161

Figure 4. IF-Display Section Parts Identification, Top View (Serial Number Prefixes: 3004A and Above) (1 of 2)

Item	HP Part Number	CD	Description	Mfr Code	Mfr Part Number
8	85662-20038	0	COVER, A4A8 ASSEMBLY	28480	85662-2003
9	85662-00075	3	COVER, DIGITAL STORAGE	28480	85662-0007
10	85662-00036	6	COVER, HV SUPPLY	28480	85662-0003
11	85662-00108	3	SHROUD, AIRDUCT (VOLTAGE REGULATOR COVER)	28480	85662-0010
12	85662-00052	6	COVER, SIDE, HV	28480	85662-0005:
	85662-00104	9	HV SUPPLY HOUSING	28480	85662-0010
13	85662-20164	3	REAR FRAME	28480	856622016.
14	5021-5837	2	CORNER STRUT, 18 INCH	28480	5021-5837
15	5021-8403	4	FRONT FRAME	28480	5021-8403
16	85662-20222	4	MAINFRAME BEZEL	28480	856622022:
17	5040-5401	6	CRT BEZEL	28480	5040-5401
18	5041-8802	9	TOP TRIM	28480	5041-8802
19	01332-60602	3	FRONT CRT SHIELD	28480	013326060:
20	85662-00103	8	REAR CRT SHIELD	28480	856620010:
21	85662-00106	1	CRT SHIELD CLAMP - LOWER	28480	85662-0010
	85662-00107	2	CRT SHIELD CLAMP - UPPER	28480	856620010~
22	85662-00037	7	AMPLIFIER SHIELD	28480	85662-00037
23	85662-20092	6	IF HOUSING CASTING	28480	856622009:
24	85662-00046	8	PC BOARD BRACKET	28480	85662-0004
25	85662-60099	7	DIGITAL STORAGE SHIELD ASSEMBLY (BENEATH COVER (9))	28480	85662-6009
26	85662-00041	3	BRACKET, DUAL CAPACITOR	28480	85662-00041
	85662-00062	8	BRACKET, TRI-CAPACITOR (OPTION 400)	28480	85662-00062
27	5062 3989	7	FRONT HANDLES	28480	5062-3989
28	85662-00040	2	CAPACITOR BRACKET	28480	85662-0004
29	50020624	5	GUARD, FAN	28480	5002-0624
30	2360-0117	6	SCREW, 632, .375-IN-LG PAN HD	28480	2360-0117
31	3050-1260	6	WASHER, FLAT 147-ID 6	28480	3050-1260
32	3050-0227	3	WASHER-FLAT .149ID 6	28480	3050-0227
33	1400-1276	5	CABLE CLAMP, .312-DIA, .375 WIDE	28480	1400-1276
34	05X-2086	9	SCREW, M4 X 7 FLAT HD	28480	0515-2086
35	2200-0109	8	SCREW, 440, .438-IN-LG PAN HD	28480	2200-0109
36	2360-0103	2	SCREW, 440, .25-IN-LG PAN HD	28480	2360-0103
37	85662-20042	6	GUIDE, HV, NYLON	28480	8566220042
38	3050-0105	6	WASHER-FLAT MTLC NO 4 .125-IN-ID	28480	3050-0105
39	2360-0113	2	SCREW, 632, .25-IN LG PAN HD	28480	2360-0113
A1T1			REFER TO TABLE 6 OF THIS TAB		
F'L1			REFER TO TABLE 6 OF THIS TAB		

Figure 4. IF-Display Section Parts Identification, Top View (Serial Number Prefixes: 3004A and Above) (2 of 2)

Analyzer Repair Inc.

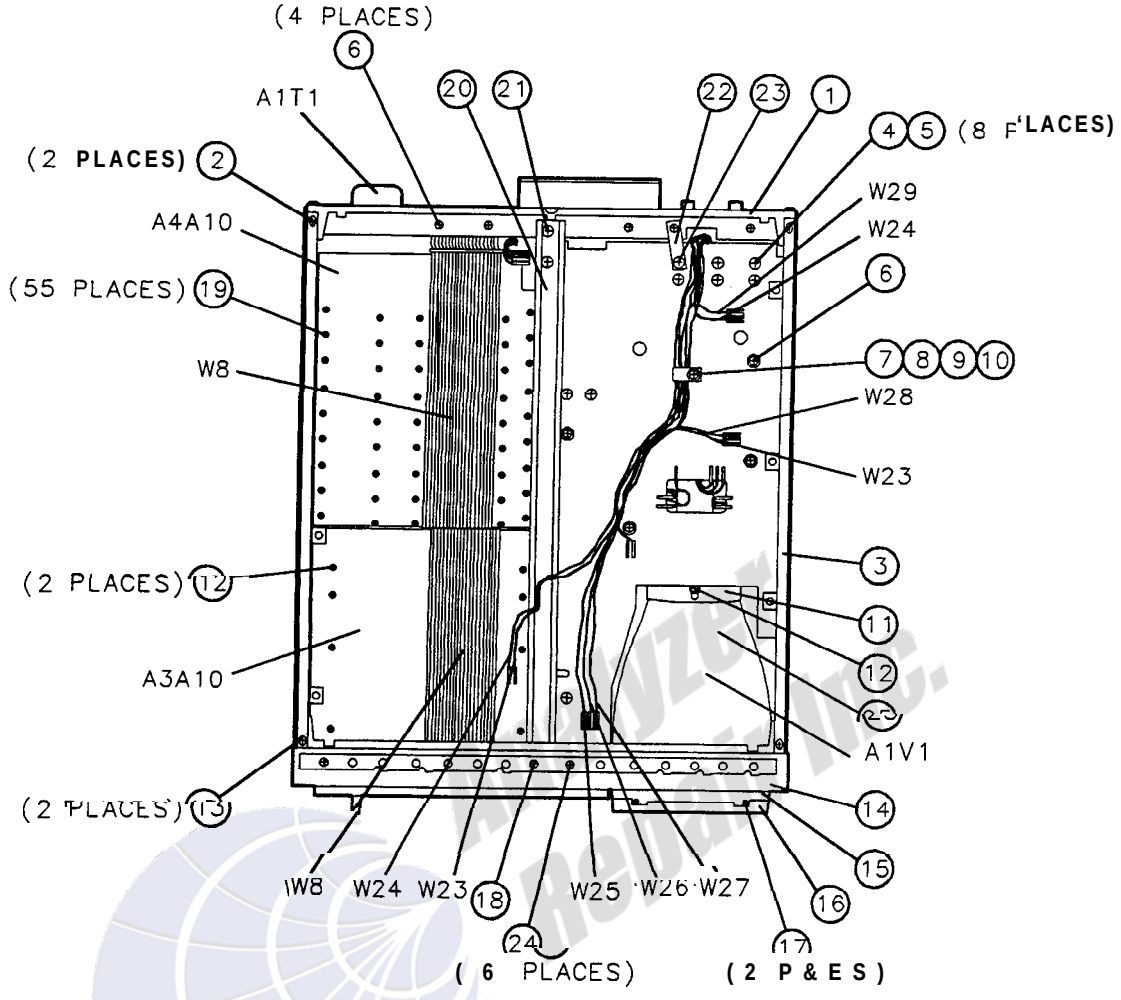

Item	HP Part Number	CD	Description	Mfr Code	Mfr Part Number
1	856622016-4	3	REAR FRAME	28480	85662-20164
2	0515-1331	5	SCREW, M4 X 6 FLAT HD	28480	0515-1331
3	5021-5837	2	STRUT, CORNER, 18 INCH	28480	5021-5837
4	2190-0011	8	WASHER, LOCK	28480	2190-0011
5	2680-0129	8	SCREW, 10-32, .312-IN-LG PAN HD	28480	2680-0129
6	2360-0113	2	SCREW, 632, .25-IN-LG PAN HD	28480	2360-0113
7	1400-1218	5	CABLE CLAMP	28480	1400-1218
8	2360-0117	6	SCREW, 632, .375-IN-LG PAN HD	28480	2360-0117

Figure 5. IF-Display Section Parts Identification, Bottom View (1 of 2)

Item	HP Part Number	CI	Description	Mfr Cod	Mfr Part Number
9	3050-0227	3	WASHER, FLAT .149-ID 6	28481	3050-0227
10			NOT USED		
11	85662-0007	4	SHIELD, CRT, REAR	28481	85662-0007
12	2200-0103	2	SCREW, 440, .25-IN-LG PAN HD	28481	2200-0103
13	0515-1331	5	SCREW, M4 X 6 FLAT HD *	2848(	0515-1331
	2510-0192	6	SCREW, 8-32.15 IN-LG 100 DEG FLAT HD **	2848(	2510-0192
14	5021-8403	4	FRONT FRAME *	28481	5021-8403
	5020-8803	6	FRONT FRAME **	2848(	5020-8803
15	656622006.	2	MAINFRAME BEZEL	2848(	85662-2006
16	5040-5401	6	CRT BEZEL	2848(	5040-5401
17	0520-0164	1	SCREW, 2-56, .250-IN-LG FLAT HD	2848(	0520-0164
18	0515-0890	9	SCREW, M3 X 6 FLAT HD *	2848(	0515-0890
	2360-0118	7	SCREW, 632.375 IN-LG 82 DEG FLAT HD **	2848(	2360-0118
19	2200-0109	8	SCREW, 440, .438-IN-LG PAN HD	2848(	2200-0109
20	356622016:	2	SUPPORT, CENTER MEMBER *	2848(	95662-2016:
	3566220031	3	SUPPORT, CENTER MEMBER **	2848C	85662-2003
21	2360-0121	2	SCREW, 632, .500-IN-LG PAN HD	2848C	2360-0121
22	35662-0005:	7	STRAP, GROUNDING	2848C	35662-0005:
23	1680-0099	1	SCREW, 632, .375-IN-LG PAN HD	2848C	26804099
24	1360-0116	5	SCREW, 632, .312-IN-LG 82 DEG FH	2848C	2360-0116
25	01332-60602	3	SHIELD, CRT, FRONT	2848C	01332-60602
A1T1			REFER TO TABLE 6 OF THIS TAB		
A1V1			REFER TO TABLE 6		
A3A10			REFER TO A3A10 TAB		
A4A10			REFER TO A4A10 TAB		
V8			REFER TO TABLE 5 OF THIS TAB		
V23			REFER TO TABLE 5		
V24			REFER TO TABLE 5		
V25			REFER TO TABLE 5		
V26			REFER TO TABLE 5		
V27			REFER TO TABLE 5		
V28			REFER TO TABLE 5		
v29			REFER TO TABLE 5		

* Serial Numbers: 2517A09288 and Above
* Serial Numbers: 2403A06183 to 2403A09287

Analyzer Repair Inc.

Figure 5. IF-Display Section Parts Identification, Bottom View (2 of 2)

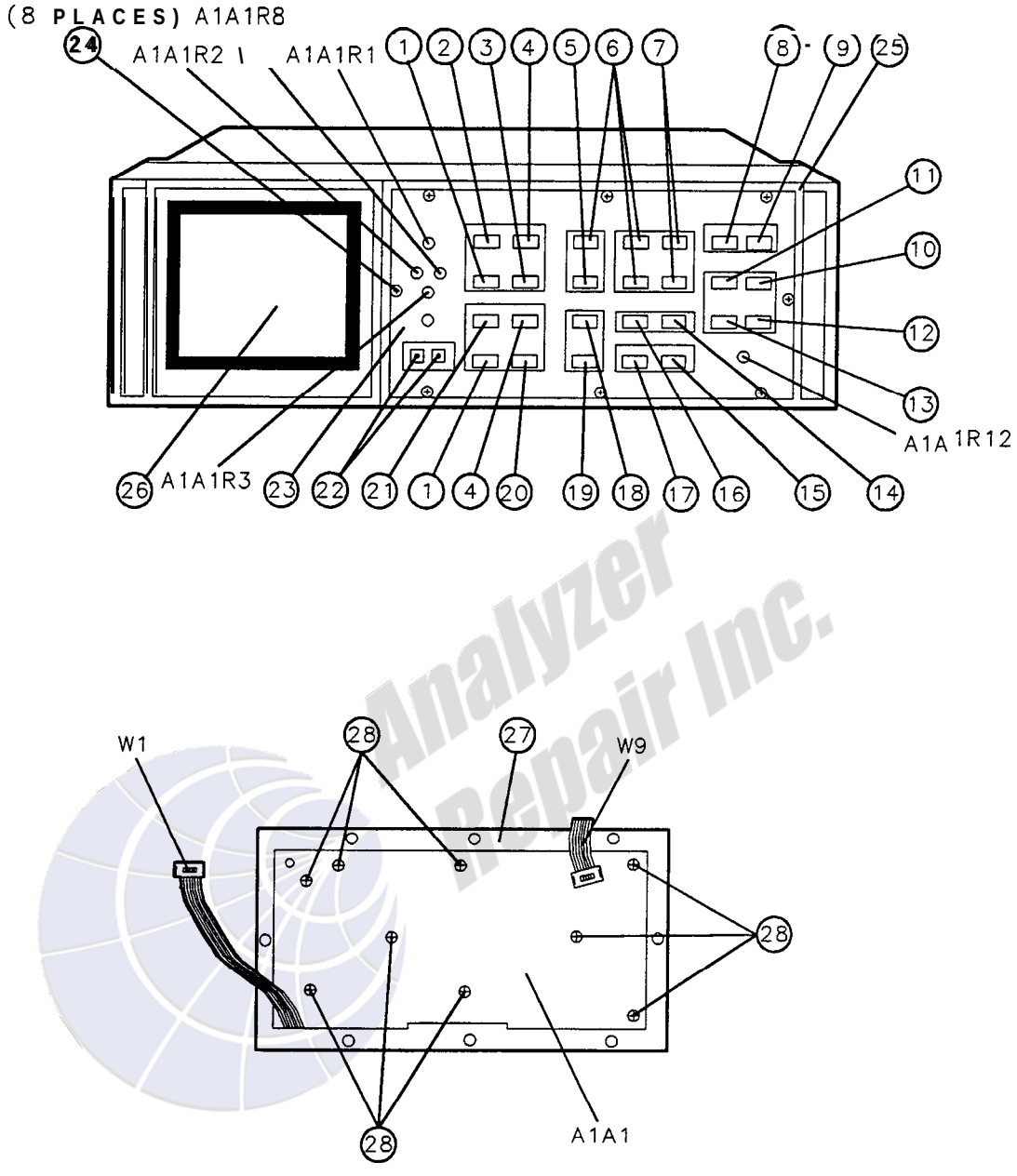

Figure 6. IF-Display Section Parts Identification, Front Panel View (1 of 2)

Analyzer Repair Inc.

Item	HP Part Number	CD	Description	Mfr Code	Mfr Part Number
1	5041-0690	7	KEY [VIEW]	28480	50410690
2	50410688	3	KEY [CLEAR-WRITE]	28480	50410688
3	5041-0807	8	KEY [BLANK]	28480	5041-0807
4	5041-0689	4	KEY [MAX HOLD]	28480	50410689
5	5041-0732	8	KEY [A−B→A]	28480	5041-0732
6	5041-0693	0	KEY [OFF]	28480	50410693
7	50410696	3	KEY [ENTER]	28480	50410696
8	5041-0700	0	KEY [CONT]	28480	5041-0700
9	5041-0701	1	KEY [SINGLE]	28480	5041-0701
10	5041-0703	3	KEY [LINE]	28480	5041-0703
11	5041-0702	2	KEY [FREE RUN]	28480	5041-0702
12	5041-0705	5	KEY [VIDEO]	28480	5041-0705
13	5041-0704	4	KEY [EXT]	28480	5041-0704
14	5041-0310	8	KEY LINEAR [ ]	28480	50410310
15	5041-0699	6	KEY [SHIFT]	28480	50410699
16	5041-0733	9	KEY [ENTER dB/DIV]	28480	5041-0733
17	5041-0697	4	KEY [NORMAL]	28480	50410697
18	5041-0694	1	KEY [A↔B]	28480	50410694
19	5041-0916	0	KEY [B−DL→B]	28480	50410916
20	50410691	3	KEY [BLANK]	28480	5041-0691
21	5041-0806	7	KEY [CLEAR-WRITE]	28480	50410806
22	5041-0285	6	KEY RECORDER [○]	28480	5041-0285
23	85662-00030	0	PANEL, SUB FRONT	28480	85662-00030
24	22000165	6	SCREW, 4-40 .250-IN-LG FLAT HD	28480	22000165
25	5040-5401	6	BEZEL FRONT	28480	5040-5401
26	9135-0052	8	RFI SHIELD:GLASS	28480	9135-0052
27	95662-00030	0	PANEL, SUB FRONT	28480	8566200030
28	2200-0109	8	SCREW, 440, .438 IN-LG PAN-HD	28480	22000109
A1A1			REFER TO A1A1 TAB		
A1A1R1			REFER TO A1A1 TAB		
A1A1R2			REFER TO A1A1 TAB		
A1A1R3			REFER TO A1A1 TAB		
A1A1R8			REFER TO A1A1 TAB		
A1A1R12			REFER TO A1A1 TAB		
W1			REFER TO TABLE 5 OF THIS TAB		
W9			REFER TO TABLE 5 OF THIS TAB		

Figure 6. IF-Display Section Parts Identification, Front Panel View (2 of 2)

Major Assembly and Component Locations

The major assemblies and components of the IF-Display section are identified in this chapter. Figure 1 and Figure 2 show the front and bottom views of the IF-Display section, respectively. Figure 3 shows the top view of the IF-Display section for instruments with serial number prefixes from 2403A through 3001A. Figure 4 shows the top view of the IF-Display section for instruments with serial number prefixes of 3004A and above.

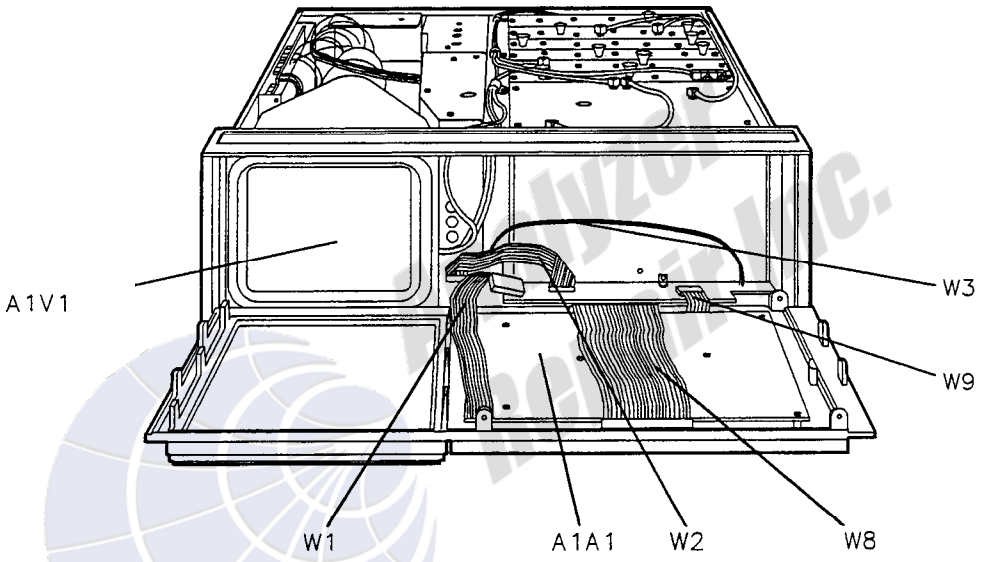

Figure 1. Major Assembly and Component Locations, Front View

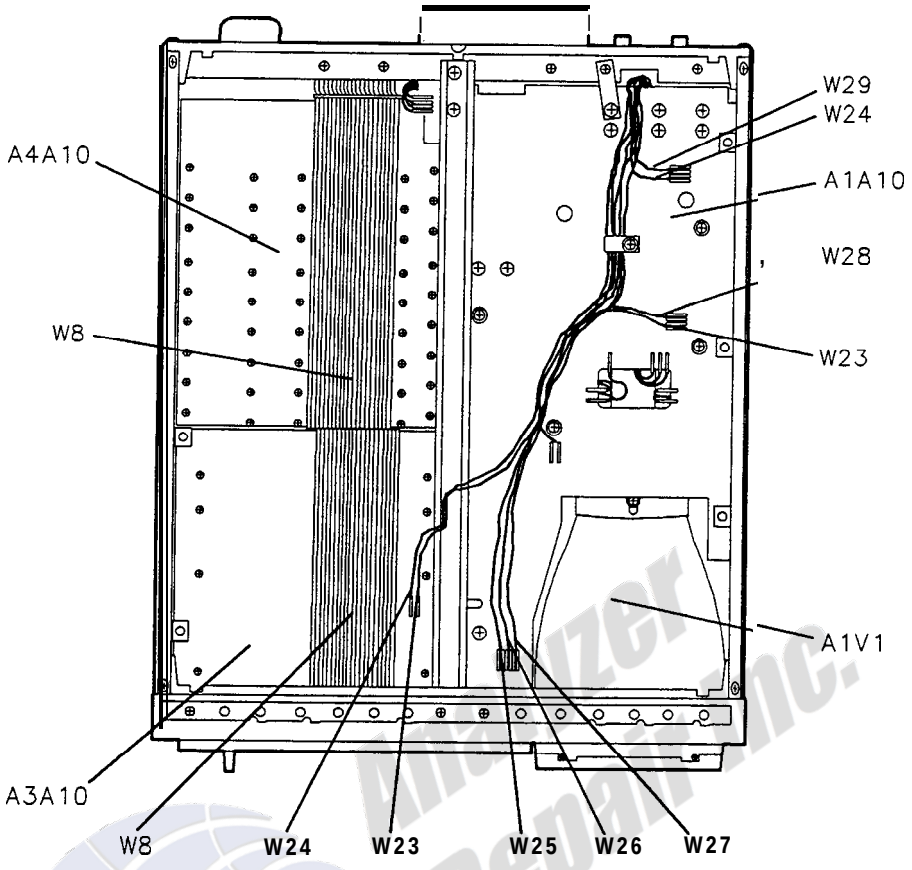

Figure 2. Major Assembly and Component Locations, Bottom View

Measurer Repair Inc.

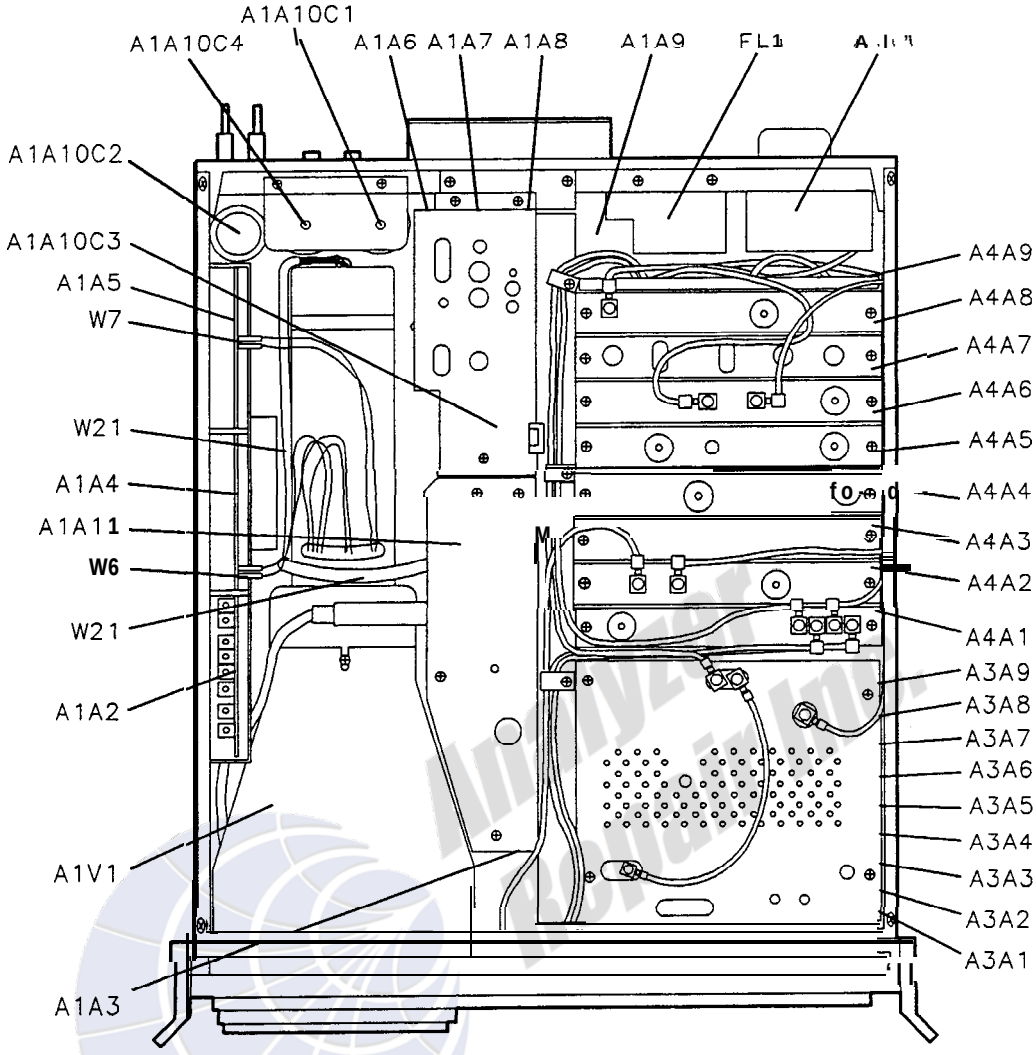

Figure 3. Major Assembly and Component Locations, Top View (Serial Number Prefixes: 2403A to 3001A)

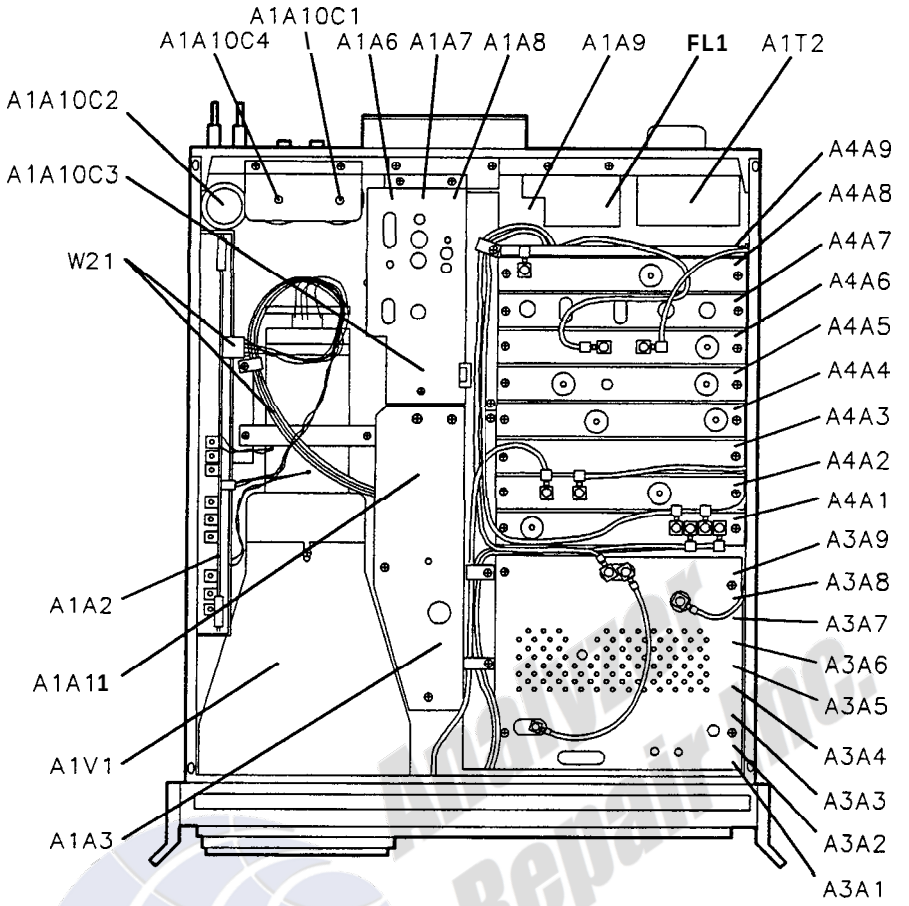

Figure 4. Major Assembly and Component Locations, Top View (Serial Number Prefixes: 3004A and Above)

Analyzer Repair Inc.

HEWLETT PACKARD

HP Part No. 85662-90085
Printed in USA