Analyzer Repair Inc.

Test Equipment Repair & Calibration

# Agilent ESA E4400 Series

Agilent ESA E4402B-E4411B Service Guide


## Need this instrument repaired or calibrated?

Analyzer Repair services spectrum analyzers, network analyzers, signal generators and other RF/microwave test equipment.

Free estimates - visit our website or email us to get started.

**www.analyzerrepair.com** **manager@analyzerrepair.com**

This manual is provided free as a reference by Analyzer Repair, Inc. All original content remains the property of its original manufacturer. Not for resale.

If you are the rights holder and object to this document being hosted here, email manager@analyzerrepair.com and it will be removed promptly.

# Service Guide

## ESA Spectrum Analyzers

**This manual provides documentation for the following instruments:**

**E4401B (9 kHz - 1.5 GHz)**
**E4402B (9 kHz - 3.0 GHz)**
**E4404B (9 kHz - 6.7 GHz)**
**E4405B (9 kHz - 13.2 GHz)**
**E4407B (9 kHz - 26.5 GHz)**

**and**
**E4411B (9 kHz - 1.5 GHz)**
**E4403B (9 kHz - 3.0 GHz)**
**E4408B (9 kHz - 26.5 GHz)**

More Application, Information, and Pricing available at:

TestWorld
250 Technology Way
Rocklin, CA 95765
sales@testworld.com
1-855-200-TEST (8378)

Click to go www.TestWorld.com

Agilent Technologies

**Manufacturing Part Number: E4401-90474**

**Printed in USA**

**February 2014**
Supersedes: April 2013

© Copyright 2000 - 2014 Agilent Technologies, Inc.

The information contained in this document is subject to change without notice.

Agilent Technologies makes no warranty of any kind with regard to this material, including but not limited to, the implied warranties of merchantability and fitness for a particular purpose. Agilent Technologies shall not be liable for errors contained herein or for incidental or consequential damages in connection with the furnishing, performance, or use of this material.

## Safety Notes

This product has been designed and tested in accordance with IEC Publication 1010, Safety Requirements for Electronic Measuring Apparatus, and has been supplied in a safe condition. The instruction documentation contains information and warnings which must be followed by the user to ensure safe operation and to maintain the product in a safe condition.

The following examples illustrate warning and caution statements that are used throughout this manual.

**WARNING** **Warning denotes a hazard. It calls attention to a procedure which, if not correctly performed or adhered to, could result in injury or loss of life. Do not proceed beyond a warning note until the indicated conditions are fully understood and met.**

**CAUTION** Caution denotes a hazard. It calls attention to a procedure that, if not correctly performed or adhered to, could result in damage to or destruction of the instrument. Do not proceed beyond a caution sign until the indicated conditions are fully understood and met.

The following safety notes are used throughout this manual. Familiarize yourself with each of the notes and its meaning before operating this instrument.

**WARNING** **This is a Safety Class 1 Product (provided with a protective earth ground incorporated in the power cord). The mains plug shall only be inserted in a socket outlet provided with a protective earth contact. Any interruption of the protective conductor inside or outside of the product is likely to make the product dangerous. Intentional interruption is prohibited.**

**WARNING** **These servicing instructions are for use by qualified personnel only. To avoid electrical shock, do not perform any servicing unless you are qualified to do so.**

**WARNING** **If this product is not used as specified, the protection provided by the equipment could be impaired. This product must be used in a normal condition (in which all means for protection are intact) only.**

**CAUTION** This product is designed for use in Installation Category II and Pollution Degree 2 per IEC 101 and 664 respectively.

# Warranty

This Agilent Technologies instrument product is warranted against defects in material and workmanship for a period of one year from date of shipment. During the warranty period, Agilent Technologies will, at its option, either repair or replace products which prove to be defective.

For warranty service or repair, this product must be returned to a service facility designated by Agilent Technologies. Buyer shall prepay shipping charges to Agilent Technologies and Agilent Technologies shall pay shipping charges to return the product to Buyer. However, Buyer shall pay all shipping charges, duties, and taxes for products returned to Agilent Technologies from another country.

Agilent Technologies warrants that its software and firmware designated by Agilent Technologies for use with an instrument will execute its programming instructions when properly installed on that instrument. Agilent Technologies does not warrant that the operation of the instrument, or software, or firmware will be uninterrupted or error-free.

## LIMITATION OF WARRANTY

The foregoing warranty shall not apply to defects resulting from improper or inadequate maintenance by Buyer, Buyer-supplied software or interfacing, unauthorized modification or misuse, operation outside of the environmental specifications for the product, or improper site preparation or maintenance.

NO OTHER WARRANTY IS EXPRESSED OR IMPLIED. AGILENT TECHNOLOGIES SPECIFICALLY DISCLAIMS THE IMPLIED WARRANTIES OF MERCHANTABILITY AND FITNESS FOR A PARTICULAR PURPOSE.

## EXCLUSIVE REMEDIES

THE REMEDIES PROVIDED HEREIN ARE BUYER'S SOLE AND EXCLUSIVE REMEDIES. AGILENT TECHNOLOGIES SHALL NOT BE LIABLE FOR ANY DIRECT, INDIRECT, SPECIAL, INCIDENTAL, OR CONSEQUENTIAL DAMAGES, WHETHER BASED ON CONTRACT, TORT, OR ANY OTHER LEGAL THEORY.

## Lithium Battery Disposal

When the battery on the A4 processor assembly (3 volt lithium battery, part number 1420-0556) is exhausted and/or ready for disposal, dispose of it according to your country's requirements. You can  the battery to your nearest Agilent Technologies Sales and Service office for disposal, if required. Refer to "Parts List" in Chapter 5.

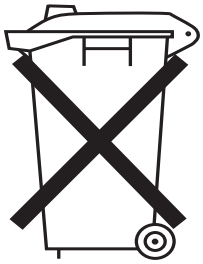

**DO NOT THROW BATTERIES AWAY BUT COLLECT AS SMALL CHEMICAL WASTE.**

sk780a

# Contents


**1. Troubleshooting the Analyzer**

What You Will Find in This Chapter . . . 12
Before You Start . . . 13
Replacement Assemblies . . . 15
After an Analyzer Repair . . . 15
ESD Information . . . 15
Check the Basics . . . 19
Problems at Instrument Power-Up . . . 20
Troubleshooting an Inoperative Analyzer . . . 21
Check the Analyzer Setup . . . 21
If the Line Fuse Has Blown . . . 22
If the Fan is Not Operating . . . 22
Checking the Power Supplies . . . 23
Troubleshooting the LCD Display . . . 25
Viewing Angle . . . 25
Isolating an LO, IF, or Video Problem . . . 27
Checking Detector Modes . . . 27
Checking Corrected versus Uncorrected Performance Using Video Shift On/Off . . . 27
Verifying the A3 IF Assembly Performance . . . 28
Checking a Horizontal Trace With No Signal or Noise Floor Present . . . 29
Checking an Analyzer That Displays a Low Signal Level . . . 29
Checking an Analyzer That Displays a High Noise Floor . . . 30
Checking an Analyzer Signal Amplitude That Appears Too High . . . 30
Checking an Analyzer Signal That Is Distorted . . . 30
Checking an Analyzer Signal That Is Off Frequency . . . 31
Checking the 21.4 MHz Alignment Signal . . . 31
Using the Internal Service-Diagnostic Routines . . . 32
Timebase (in Alignments Menu) . . . 32
Timebase (in Service Menu) . . . 33
Video Shift On/Off . . . 33
Align Now . . . 34
Visible Align . . . 35
Noise Source . . . 35
Load Defaults . . . 35
Restoring System Defaults . . . 35
Troubleshooting the A4 Processor Assembly . . . 37
Initial Checks . . . 37
Bootrom Self-Test Check . . . 38
Clearing Dynamic RAM . . . 39
Clearing Flash EPROM . . . 39
Troubleshooting the A2 1.5 GHz Tracking Generator (E4401B and E4411B) (Option 1DN/1DQ) . . . 40
If Output is Unleveled (TG Unleveled message displayed) . . . 40
If the TG LO is Unlocked (TG LO Unlocked message displayed) . . . 41
If the Tracking Generator Is Not Properly Recognized by the Firmware . . . 41
If Flatness is Out of Tolerance . . . 42
If Vernier Accuracy is Out of Tolerance . . . 42
If Harmonics and Spurious Outputs are Too High . . . 42
If Power Sweep is Not Functioning Properly . . . 44
If There is No Output Power . . . 44
Troubleshooting the A2 3.0 GHz Tracking Generator (E4402B, E4403B, E4404B, E4405B, E4407B, and E4408B) (Option 1DN) . . . 45
Troubleshooting the Digital Demod Hardware (E4402B, E4404B, E4405B, and E4407B) (Option B7D and B7E) . . . 47
Troubleshooting Analyzer Mode Errors Caused By the DDRF or DSP Boards . . . 47

Troubleshooting the Digital Demodulation Hardware When Running the cdmaOne or GSM Personalities . . . . . 48
Troubleshooting the A7A13 Noise Source Driver Assembly . . . . . 54

**2. Troubleshooting the RF Section**
What You Will Find in This Chapter . . . . . 58
Verifying the RF Section Performance
(E4401B and E4411B) . . . . . 59
RF Performance Check . . . . . 59
Verifying the RF Section Performance
(E4402B and E4403B) . . . . . 61
Quick Check RF Procedure . . . . . 61
Detailed RF Troubleshooting . . . . . 63
Verifying the RF Section Performance
(E4404B, E4405B, E4407B, and E4408B) . . . . . 71
“Quick Check” RF Procedure in Low Band (Non-Preselected) . . . . . 71
Detailed RF Troubleshooting for Low Band . . . . . 73
Quick Check RF Procedure for High Bands (Preselected) . . . . . 81
Detailed RF Troubleshooting for High Bands (Preselected) . . . . . 83

**3. Block Diagrams**
What You Will Find in This Chapter . . . . . 92
A8 1.5 GHz RF Assembly . . . . . 93
Input Connector . . . . . 93
Input Protection . . . . . 93
Attenuator . . . . . 94
Low-Pass Filter . . . . . 94
First Mixer . . . . . 94
First IF Amplifier/Filter/Attenuator . . . . . 94
Second Mixer . . . . . 94
21.4 MHz Amplifier . . . . . 95
Frequency Reference . . . . . 95
LO . . . . . 95
Interconnections to Other Assemblies . . . . . 96
A8 RF Assembly . . . . . 97
A8J10 Input Connector . . . . . 98
A8A1 3.0 GHz RF Assembly . . . . . 98
A8A1A1 Reference/Third Converter . . . . . 99
A8A1A2 Front End/LO . . . . . 99
A8A2 Second Converter . . . . . 100
A8A3 dc Block . . . . . 100
A8A4 LO Amplifier/IF Switch (LOIS) . . . . . 100
A8A5 Input Attenuator . . . . . 101
A8A6 YIG-Tuned Filter/Mixer (RYTHM) . . . . . 101
A8FL1 3.1 GHz Low-Pass Filter (LPF) . . . . . 101
A7A4 Frequency Extension . . . . . 101
A3 IF Assembly . . . . . 102
Cal Attenuator . . . . . 102
21.4 MHz Bandpass Filters . . . . . 102
Log Detector . . . . . 102
Linear Detector . . . . . 102
Interconnections to Other Assemblies . . . . . 103
Downconverter . . . . . 103
A4 Processor Assembly . . . . . 104

# Contents


Analog Section . . . 104
Analyzer Battery Information . . . 105
Interconnections to Other Assemblies . . . 106
A4A1 Flash SIMM . . . 107
A4A2 DRAM SIMM . . . 107
A5 Power Supply Assembly . . . 108
Interconnections to Other Assemblies . . . 108
A7 Motherboard . . . 109
Miscellaneous . . . 110
A1 Display/Front Panel . . . 110
Motherboard Mnemonics and Connectors . . . 111
Tracking Generator Block Diagrams . . . 139
Digital Demod DSP/Fast ADC Block Diagram . . . 141
Digital Demod RF Block Diagram . . . 142

**4. Options and Accessories**

Options . . . 147
How to Order Options . . . 148
12 Vdc Power Cable (Option A5D) . . . 148
3 Year Calibration Contract (Option W32) . . . 148
3 Year Service Support (Option W30) . . . 148
5 Year Calibration Contract (Option W52) . . . 148
5 Year Service Support (Option W50) . . . 148
50 Ω to 75 Ω Matching Pad (Option 1D7) . . . 148
50 Ohm Tracking Generator (Option 1DN) . . . 148
75 Ohm Input Impedance (Option 1DP) . . . 149
75 Ohm Tracking Generator (Option 1DQ) . . . 149
8566 Series Programming Code Compatibility (Option 266) . . . 149
ACPR Dynamic Range Extension (Option 120) . . . 149
Additional Manual Set (Option 0B1) . . . 149
APC 3.5 Input Connector (Option BAB) . . . 149
Backpack Operating and Carrying Cases (Option 042/044) . . . 150
Benchlink Spectrum Analyzer (Option B70) . . . 150
Benchlink Web Remote Control Software (Option 230) . . . 150
Bluetooth FM Demodulation (Option 106) . . . 150
Bluetooth General Purpose Bundle (Option 303) . . . 151
Bluetooth Measurement Personality (Option 228) . . . 151
Bluetooth Premium Bundle (Option 304) . . . 151
Cable TV Measurement Personality (Option 227) . . . 151
cdmaOne Measurement Personality (Option BAC) . . . 151
Color Display (Option 049) . . . 152
Commercial Calibration with Test Data (Option UK6) . . . 152
Component Level Service Documentation (Option 0BV) . . . 152
Delete Manual Set (Option 0B0) . . . 152
Digital Signal Processing and Fast ADC (Option B7D) . . . 153
Distance to Fault Accessory Kit (Option B7K) . . . 153
Distance to Fault Measurement Personality (Option 225) . . . 153
Enhanced Memory Upgrade (Option B72) . . . 153
External Mixing (Option AYZ) . . . 153

Fast Digitized Time Domain Sweeps (Option AYX) . . . 154
Firmware Upgrade Kit (Option UE2) . . . 154
FM Demodulation (Option BAA) . . . 154
Front Panel Protective Cover (Option UK9) . . . 155
GPIB and Parallel Interface (Option A4H) . . . 155
GSM Measurement Personality (Option BAH) . . . 155
Hard Transit Case (Option AXT) . . . 155
High Stability Frequency Reference (Option 1D5) . . . 155
IF, Sweep and Video Ports (Option A4J) . . . 155
Low Emission (Option 060) . . . 156
Low Frequency Extension (Option UKB) . . . 156
Narrow Resolution Bandwidth (Option 1DR) . . . 156
Noise Figure Measurement Personality and Hardware (Option 219) . . . 156
Operating and Carrying Cases (Option AYT/AYU) . . . 156
Performance Bundle (Option B75) . . . 157
Phase Noise Measurement Personality (Option 226) . . . 157
Pre-amplifier (Option 1DS) . . . 157
Rack Mount Kit With Handles (Option 1CP) . . . 157
RF and Digital Communications Hardware (Option B74) . . . 157
RF Communications Hardware (Option B7E) . . . 157
RS-232 and Parallel Interface (Option 1AX) . . . 157
Service Documentation (Option 0BW) . . . 158
Time-Gated Spectrum Analysis (Option 1D6) . . . 158
TV Trigger and Picture on Screen (Option B7B) . . . 158
Accessories . . . 159
50 Ω/75 Ω Minimum Loss Pad . . . 159
75 Ω Matching Transformer . . . 159
AC Probe . . . 159
Broadband Preamplifiers and Power Amplifiers . . . 159
Carrying Strap (Part Number E4401-60028) . . . 160
External Keyboard . . . 160
GPIB Cable . . . 160
Agilent 11970 Series Harmonic Mixers . . . 160
Agilent 11974 Series Preselected Millimeter Mixers . . . 160
Agilent E1779BA Battery Pack . . . 161
Parallel Interface Cable . . . 161
Printer . . . 161
RF and Transient Limiters . . . 161
RF Bridges . . . 162
RS-232 Cable . . . 162

**5. Parts List**
What You Will Find in This Chapter . . . 164
How to Order Parts . . . 165
Direct Mail-Order System . . . 165
Direct Phone-Order System . . . 166
Replaceable Parts . . . 172
Component-Level Information Packets . . . 238
Ordering CLIPs . . . 238

# Contents


Contacting Agilent Technologies . . . . . 241
How to Return Your Analyzer for Service . . . . . 242
Service Tag . . . . . 242
Original Packaging . . . . . 242
Other Packaging . . . . . 244

**6. Replacing Assemblies**
What You Will Find in This Chapter . . . . . 246
Before You Start . . . . . 247
Service tools you will need . . . . . 247
After a spectrum analyzer repair . . . . . 248
Removal and Replacement Procedures in This Chapter . . . . . 249
Instrument Outer Case . . . . . 250
Removal . . . . . 251
Replacement . . . . . 251
Chassis Cover . . . . . 252
Removal . . . . . 252
Replacement . . . . . 253
A1 Front Frame Assembly . . . . . 254
Extension . . . . . 254
Removal . . . . . 255
Replacement . . . . . 256
Nameplate . . . . . 257
Removal and Replacement . . . . . 257
Connector Label . . . . . 258
Removal . . . . . 258
Installation . . . . . 260
Replacement . . . . . 261
Front Frame Subassemblies . . . . . 262
A1A2 Display . . . . . 262
A1A1 Front Panel Interface Board . . . . . 265
Front Panel RPG . . . . . 266
Keypad/Flex Circuit . . . . . 267
Lens/Keypad Assembly . . . . . 268
Display Backlight . . . . . 269
Vibration Support Bar . . . . . 271
Removal . . . . . 271
Replacing the Vibration Support Bar . . . . . 271
A2 1.5 GHz Tracking Generator Assembly . . . . . 274
Removal . . . . . 274
Replacement . . . . . 274
Tracking Generator Boards . . . . . 275
Tracking Generator RF Board Removal . . . . . 276
Tracking Generator Control Board Removal . . . . . 276
Tracking Generator Output Board Removal . . . . . 277
1.5 GHz Tracking Generator RF Output Connector . . . . . 278
A2 3.0 GHz Tracking Generator Assembly . . . . . 279
Removal . . . . . 279
Replacement . . . . . 280
A3 IF Assembly . . . . . 281
Removal . . . . . 281
Replacement . . . . . 282
A4 Processor Assembly . . . . . 283

Removal . . . 283
Replacement . . . 284
A4A1 and A4A2 Flash and DRAM SIMM . . . 285
Removal and Replacement . . . 285
A4MAU58 Battery . . . 286
Removal and Replacement . . . 286
A5 Power Supply . . . 287
Removal . . . 287
Replacement . . . 288
A5B1 Fan . . . 289
Removal . . . 289
Replacement . . . 290
A6 Floppy Drive and Speaker Assembly . . . 291
Removal . . . 291
Replacement . . . 292
A7 Motherboard Assembly . . . 293
Removal . . . 293
Replacement . . . 294
Card Cage Assemblies . . . 296
FM Demod, SIO, GPIB, RS-232, Noise Source Driver . . . 296
Digital Demod Assemblies Replacement . . . 298
A8 1.5 GHz RF Assembly . . . 304
Removal . . . 304
Replacement . . . 305
A8 3.0 GHz RF Assembly . . . 307
Removal . . . 307
Replacement . . . 309
RF Subassemblies . . . 311
A8A1 OCXO Precision Frequency Reference . . . 311
A8A4 LO Amp/IF Switch Assembly . . . 312
A8A5 Input Attenuator . . . 313
A8A6 YIG-Tuned Filter/Mixer . . . 315
A8A2 Second Converter . . . 317
RF Input Connector . . . 319
1.5 GHz RF Input Connector . . . 321

**7. Post-Repair Procedures**
What You Will Find in This Chapter . . . 324
Safety . . . 325
Before You Start . . . 326
Finding abnormal indications during adjustments . . . 326
Periodically verifying calibration . . . 326
Replacing or repairing an assembly . . . 326
List of Tests and Adjustments for Calibration . . . 327
List of Tests and Adjustments for Post-Repair . . . 330

**8. Performance Verification and Adjustment Software**
What You Will Find in This Chapter . . . 334
Introduction . . . 335
Instruments with Option 266 or Option 290 . . . 335
N7800A Calibration and Adjustment Software . . . 335
ESA Field Test Software . . . 335

# 1 Troubleshooting the Analyzer

## What You Will Find in This Chapter

This chapter provides information that is useful when starting to troubleshoot an analyzer failure. It provides procedures for troubleshooting common failures and isolating problems in the analyzer. Assembly descriptions are located in Chapter 3, "Block Diagrams."

Component level information containing material lists, schematics, and component location diagrams, is available separately.

## Before You Start

There are four things you should do before starting to troubleshoot a failure:

- Check that you are familiar with the safety symbols marked on the instrument, and read the general safety considerations and the safety note definitions given in the front of this guide.
- The analyzer contains static sensitive components. Read the section entitled "ESD Information" on page 1-15 in this chapter.
- Become familiar with the organization of the troubleshooting information in this chapter.
- Read the rest of this section.

**WARNING** **These servicing instructions are for use by qualified personnel only. To avoid electrical shock, do not perform any servicing unless you are qualified to do so.**

**WARNING** **The opening of covers or removal of parts is likely to expose dangerous voltages. Disconnect the product from all voltage sources while it is being opened.**

**WARNING** **The detachable power cord is the instrument disconnecting device. It disconnects the mains circuits from the mains supply before other parts of the instrument. The front panel switch is only a standby switch and is not a LINE switch (disconnecting device).**

**CAUTION** Always position the instrument for easy access to the disconnecting device (detachable power cord).

**WARNING** **To prevent electrical shock, disconnect the analyzer from mains before cleaning. Use a dry cloth or one slightly dampened with water to clean the external case parts. Do not attempt to clean internally.**

**WARNING** **For continued protection against fire hazard, replace fuses, and or circuit breakers only with same type and ratings. The use of other fuses, circuit breakers or materials is prohibited.**

**WARNING** **This is a Safety Class 1 Product (provided with a protective earth ground incorporated in the power cord). The mains plug shall only be inserted in a socket outlet provided with a protective earth contact. Any interruption of the protective conductor inside or outside of the product is likely to make the product dangerous. Intentional interruption is prohibited.**

**CAUTION** Always use the three-prong ac power cord supplied with this product. Failure to ensure adequate earth grounding by not using this cord may cause product damage.

**CAUTION** Before switching on this instrument, make sure of the following:

- the correct fuse is installed
- the supply voltage is in the specified range

**CAUTION** This instrument has auto-ranging line voltage input, be sure the supply voltage is within the specified range and voltage fluctuations do not to exceed 10 percent of the nominal supply voltage.

**WARNING** **The Agilent Technologies E4402B, E4403B, E4404B, E4405B, E4407B, E4408B, E4411B, E7402A, E7405A may be used with an E1779B Rechargeable Battery Pack which contains a Ni-Cd battery. The battery must be recycled or disposed of properly.**

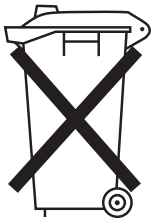

**DO NOT THROW BATTERIES AWAY BUT COLLECT AS SMALL CHEMICAL WASTE.**

sk780a

## Replacement Assemblies

The analyzer assemblies are not repairable to the component level. The following assemblies must be replaced as an assembly.

- RF assembly (E4401B, E4411B)
- RF assembly and associated microcircuits (E4402B, E4403B, E4404B, E4405B, E4407B, E4408B)
- Frequency extension assembly (E4404B, E4405B, E4407B, E4408B)
- IF assembly
- Power supply assembly
- Processor assembly
- Motherboard
- Speaker/floppy assembly
- Display
- Display interface board
- Option boards:
  - — Fast ADC assembly (Option AYX)
  - — FM Demod assembly (Option BAA)
  - — IF, Sweep, and Video Ports assembly (Option A4J)
  - — ACPR dynamic range enhancement assembly (Option 120)
  - — Bluetooth FM Demod assembly (Option 106)
  - — Noise Source Drive assembly (part of Option 219)
  - — Digital Demod DSP assembly (Option B7D)
  - — Digital Demod RF assembly (Option B7E)

The tracking generator assembly (Option 1DN or 1DP) consists of three subassemblies and is repairable to the subassembly level.

## After an Analyzer Repair

If one or more analyzer assemblies have been repaired or replaced, perform the related adjustments and performance verification tests. Refer to Table 7-2 in Chapter 7 for the related adjustments and performance verification tests required for each assembly.

## ESD Information

### Protection from Electrostatic Discharge

Electrostatic discharge (ESD) can damage or destroy electronic components. All work on electronic assemblies should be performed at a static-safe workstation. Figure 1-1 shows an example of a static-safe workstation using two types of ESD protection:

- o Conductive table-mat and wrist-strap combination.
- o Conductive floor-mat and heel-strap combination.

Both types, when used together, provide a significant level of ESD protection. Of the two, only the table-mat and wrist-strap combination provides adequate ESD protection when used alone. To ensure user safety, the static-safe accessories must provide at least 1 megohm of isolation from ground. Refer to Table 1-1 on page 16 for information on ordering static-safe accessories.

**WARNING** **These techniques for a static-safe workstation should not be used when working on circuitry with a voltage potential greater than 500 volts.**

**Figure 1-1** **Example of a Static-Safe Workstation**

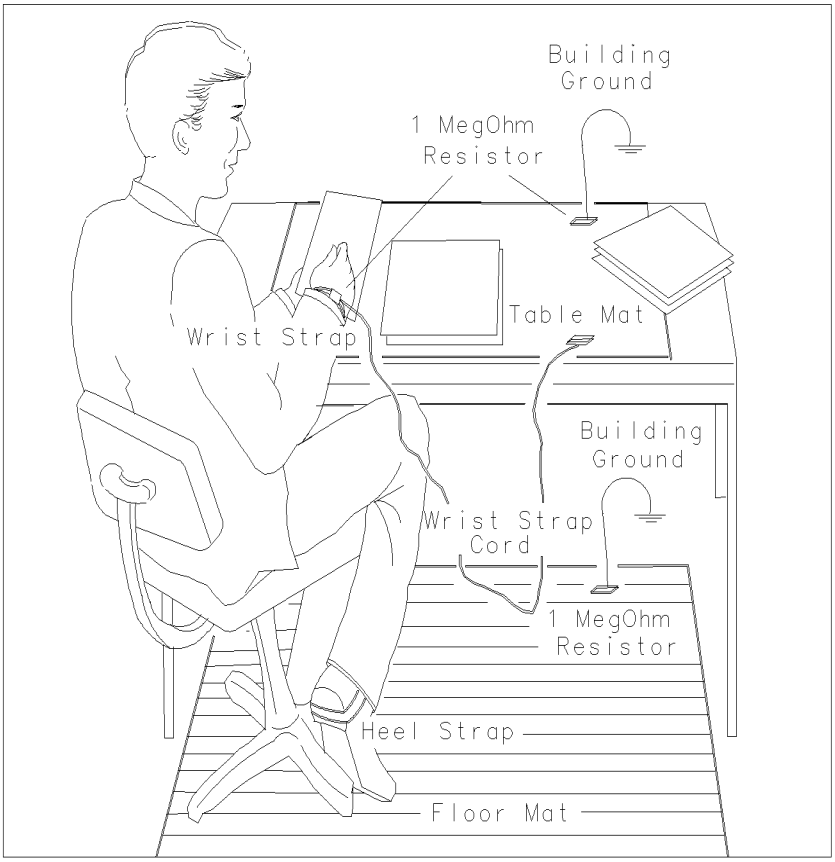


FORMAT46

**Table 1-1** **Static Safe Accessories**

| Part Number | Description |
|---|---|
| 85043-80013 | Set includes: 3M static control mat 0.4 m × 0.6 m (16 inches × 23 inches) and 4.6 cm (15 ft) ground wire, wrist strap, and wrist-strap cord. |
| 9300-0980 | Wrist-strap cord 1.5 m (5 ft) |

**Table 1-1 Static Safe Accessories**

| Part Number | Description |
|---|---|
| 9300-1367 | Wrist-strap, color black, stainless steel, without cord, has four adjustable links and a 7 mm post-type connection. |
| 9300-1308 | ESD heel-strap (reusable 6 to 12 months) |

### Handling of Electronic Components and ESD

The possibility of unseen damage caused by ESD is present whenever components are transported, stored, or used. The risk of ESD damage can be greatly reduced by close attention to how all components are handled.

- Perform work on all components at a static-safe workstation.
- Keep static-generating materials at least one meter away from all components.
- Store or transport components in static-shielding containers.

**CAUTION** Always handle printed circuit board assemblies by the edges. This will reduce the possibility of ESD damage to components and prevent contamination of exposed plating.

### Test Equipment Usage and ESD

- Before connecting any coaxial cable to an analyzer connector, momentarily short the center and outer conductors of the cable together.
- Personnel should be grounded with a 1 megohm resistor-isolated wrist-strap before touching the center pin of any connector and before removing any assembly from the analyzer.
- Be sure that all analyzers are properly earth-grounded to prevent build-up of static charge.

### For Additional Information about ESD

For more information about preventing ESD damage, contact the Electrical Over Stress/Electrostatic Discharge (EOS/ESD) Association, Inc. The ESD standards developed by this agency are sanctioned by the American National Standards Institute (ANSI).

## Check the Basics

A problem can often be resolved by repeating the procedure you were following when the problem occurred. Before calling Agilent Technologies or returning the analyzer for service, please make the following checks:

- Check the line fuse.
- Is there power at the receptacle?
- Is the analyzer turned on? Make sure the fan is running, which indicates that the power supply is on.
- If the display is dark or dim, press the upper **Viewing Angle** key in the upper-left corner of the front panel. If the display is too bright, adjust the lower **Viewing Angle** key in the upper-left corner of the front panel.
- If other equipment, cables, and connectors are being used with your analyzer, make sure they are connected properly and operating correctly.
- Review the procedure for the measurement being performed when the problem appeared. Are all the settings correct?
- If the analyzer is not functioning as expected, return the analyzer to a known state by pressing the **Preset** key and **Factory Preset** (if present).

  Some analyzer settings are not affected by a Preset. Refer to the "Front-Panel Key Reference" chapter of the user's guide for information on settings affected by a Preset.

- Is the measurement being performed, and the results that are expected, within the specifications and capabilities of the analyzer? Refer to the appropriate "Specifications and Characteristics" chapters in the specifications guide for more details.
- In order to meet specifications, the analyzer must be aligned. Either Auto Align All must be selected (press **System**, **Alignments**, **Auto Align**, **All**), or the analyzer must be manually aligned at least once per hour, or whenever the temperature changes more than 3° C. When **Auto Align**, **All** is selected, `AA` appears on the left edge of the display. Refer to the appropriate "Specifications and Characteristics" chapters in the specifications guide for more details.
- Is the analyzer displaying an error message? If so, refer to the instrument messages/functional tests guide.
- If the necessary test equipment is available, perform the performance verification tests in the calibration guide or use the performance verification software. Record all results on a Performance Verification Test Record form which follows the tests.
- If the equipment to perform the performance verification tests is not available, you may still be able to perform the functional checks in the user's guide.

## Problems at Instrument Power-Up

This section describes symptoms that can occur when the analyzer is first powered on.

**CAUTION** Immediately unplug the analyzer from the ac power line if the unit shows any of the following symptoms:

- Smoke, arcing, or unusual noise from inside the unit, except as noted below.
- No response of any kind when unit is plugged into ac power mains and turned on.
- The analyzer ac power fuse blows.
- A circuit breaker or fuse on the main ac power line opens.

These potentially serious faults must be corrected before proceeding. Refer to "Troubleshooting an Inoperative Analyzer" on page 21.

Note that these analyzers are equipped with a speaker and normally emit noise from the speaker at power-up. This is not a problem; adjust the volume control as desired.

The analyzer will also occasionally emit "clicking" noises. These are normal and are related to the analyzer self alignment routines.

If the analyzer always turns on when power is applied, check the rear of the analyzer. There is an "always on" power mode switch that can be changed. Refer to the rear panel features section of the user's guide for information on this switch.

# Troubleshooting an Inoperative Analyzer

When an analyzer appears to be dead (no display or inoperative fan) there is often little evidence that points directly to the cause. This section provides steps and solutions to typical failure modes relating to an inoperative analyzer.

Before troubleshooting an analyzer, ensure that it has been set up correctly.

## Check the Analyzer Setup

Perform the steps in the section titled “Check the Basics” earlier in this chapter.

### Initial Checks

Perform the following initial checks when first troubleshooting an inoperative analyzer.

1. Is the fan running?
   a. If the fan is not running, refer to the section “If the Fan is Not Operating” on page 22.
   b. If the fan is running, this indicates the power supply is functioning at least partially.
2. Is the display on?
   a. If the display is blank, refer to the section “Checking the Power Supplies” on page 23. Also verify that the firmware is good by performing the “Bootrom Self-Test Check” on page 38.
   b. If the display is on and the fan is running, suspect one or more power supplies is being pulled down, or a defective processor assembly. In either case, the analyzer outer case and inner shield must be removed. Refer to Chapter 6 for removal procedures.
3. Check the power supplies.
   a. To check the power supply voltages, refer to the section “Checking the Power Supplies” on page 23.
   b. If the supplies all measure good, suspect a defective processor, or a defective LCD or interface board.

4. Perform the following checks for the processor assembly.

   a. Is the analyzer “clicking?” The analyzer should occasionally emit “clicking” noises. These are related to the analyzer automatic self alignment routines, and indicate the processor is basically functioning. When the analyzer is cold, there will be more self alignment activity (more clicking) than when it is warm.

      If you do not hear any clicks after a few minutes, suspect a defective processor assembly. Refer to the section “Troubleshooting the A4 Processor Assembly” on page 37.

   b. Are the processor assembly LEDs all out? There are LEDs along the top edge of the processor assembly. These should all be off. To check their functionality, cycle the analyzer power. The processor LEDs should all go on for a few seconds, then go off. If one or more LEDs remains on, suspect the processor assembly is defective. Refer to the section “Bootrom Self-Test Check” on page 38.

   c. If the analyzer is clicking, and all of the processor LEDs are out, suspect a defective LCD or a defective front panel interface board. Refer to the section “Troubleshooting the LCD Display” on page 25.

## If the Line Fuse Has Blown

If the line fuse has blown, perhaps a nonstandard fuse with too low a current rating was installed. If the line fuse still blows, suspect that the power supply assembly is defective.

**WARNING** **For continued protection against fire hazard, replace fuses, and or circuit breakers only with same type and ratings. The use of other fuses, circuit breakers or materials is prohibited.**

## If the Fan is Not Operating

**CAUTION** The power supply may be hot if the instrument has been operating without the fan running. Allow the instrument to cool down before troubleshooting.

1. If there is no display:

   a. Unplug the line-power cord.

   b. Change the switch at the rear of the analyzer so the power is always on. Refer to the rear panel features section of the user’s guide for information on this switch. This will bypass the front panel power switch.

c. If the fan still does not turn on, suspect a defective power supply assembly. Refer to the section "Checking the Power Supplies" on page 23, to check individual supply voltages.

d. If the fan starts, this indicates a problem with the front panel switch or the circuitry to the front panel switch.

2. If there is a display:

   a. Remove the analyzer outer case. Refer to Chapter 6 for removal details.

   b. Measure the fan voltage.

   c. The fan voltage can be checked directly at the center of the fan where the wires connect. The fan normally operates on a voltage ranging from –5 to –16 Vdc depending on the temperature of the analyzer. As analyzer temperature increases, fan voltage should become more negative, increasing the speed of the fan.

      If the correct voltage is present, suspect a defective fan.

      If the voltage is not present, check the plug where the fan wires attach to the power supply board. If this looks good, suspect a defective power supply. Refer to Chapter 6 for information on how to remove the power supply.

## Checking the Power Supplies

The power supply test board is no longer supplied. If the power supply is suspect, change the power supply. All ESA models use the same power supply, so substitution is possible to determine if the power supply is defective.

**WARNING** **The analyzer contains potentially hazardous voltages. Refer to the safety symbols provided on the analyzer, and in the general safety instructions in this guide, before operating the unit with the cover removed. Ensure that safety instructions are strictly followed. Failure to do so can result in severe or fatal injury.**

The +15 V and –12.6 V supplies can be measured directly on the probe power connector located on the front of the instrument. See Figure 1-2 for these test points. If –12.6 V is within limits, it is a reasonably good indicator that –15 V is within specifications.

**Figure 1-2** **Probe Power Connector Voltages**

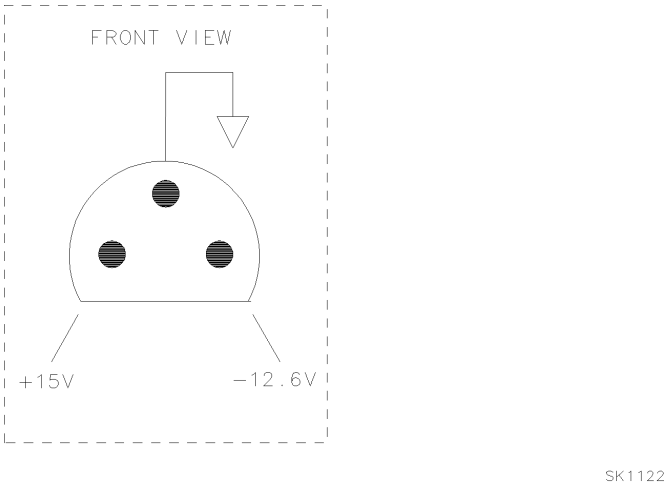


### If All Low Voltage Supplies are At or Near Zero Volts

If all the power supplies are dead, suspect a defective A5 power supply assembly. Refer to Chapter 6 for removal instructions.

### If Some Low Voltage Supplies are At or Near Zero Volts

If some supplies are functioning while others are dead or low, it is possible that one of the assemblies in the analyzer is loading down the power supply.

In this case it is necessary to sequentially remove the assemblies, taking care to disconnect the line-power cord before removing any assembly. A logical first step would be to unplug the RF assembly ribbon cable from the motherboard at the rear of the instrument. This disconnects the complete RF section without having to remove it from the chassis. Refer to Chapter 6 for any other assembly removal procedures.

After an assembly is disconnected or removed, plug the line-power cord back into the analyzer and remeasure the supply that was down. If it is still down, continue with the assembly removal. If the supply is now up, suspect the last assembly removed as being defective.

# Troubleshooting the LCD Display

The only adjustment that can be made to the LCD display is the viewing angle. This is found on the front panel of the analyzer in the upper left corner.

## Viewing Angle

1. Verify that the analyzer has gone through a full power-on sequence. Refer to the section "Troubleshooting an Inoperative Analyzer" on page 21.
2. If the display is dark (not visible), connect an external VGA monitor to the rear panel VGA output connector on the analyzer. It is possible that some multisync monitors may not be able to lock to a 60 Hz sync pulse. If the video information is not present on the external VGA monitor, the most probable cause is the A4 processor assembly.
3. If the external VGA monitor is functioning, verify that the ribbon cables going to and from the A1A1 front panel interface assembly are aligned properly and securely plugged into the connectors.
4. To determine whether the A1A2 LCD display or the A1A1 front panel interface assembly is defective, remove the front frame assembly. See Chapter 6, "Replacing Assemblies."

**WARNING** **The inverter board contains high voltage for the backlights. Carefully remove the inverter board by taking out the two screws securing it to the front frame, then turn it over to access the CN1 connector.**

Refer to Table 1-2 on page 25 and carefully measure the voltage coming into the inverter board at CN1 pins 1-6 with a digital voltmeter.

**Table 1-2** **Measurement Locations and Expected Voltages**

| Measurement Location | Expected Voltage from A1A1 Front Panel Interface |
|---|---|
| CN1 Pin 1 | 0 Vdc |
| CN1 Pin 2 | 0 Vdc |
| CN1 Pin 3 | 5 Vdc |
| CN1 Pin 4 | 5 Vdc |
| CN1 Pin 5 | 30 mV |
| CN1 Pin 6 | 2.5 Vdc |

The display is not field-repairable, and must be replaced as an assembly. Refer to Chapter 5 for part-number information.

**Figure 1-3 LCD Troubleshooting Measurement Locations**

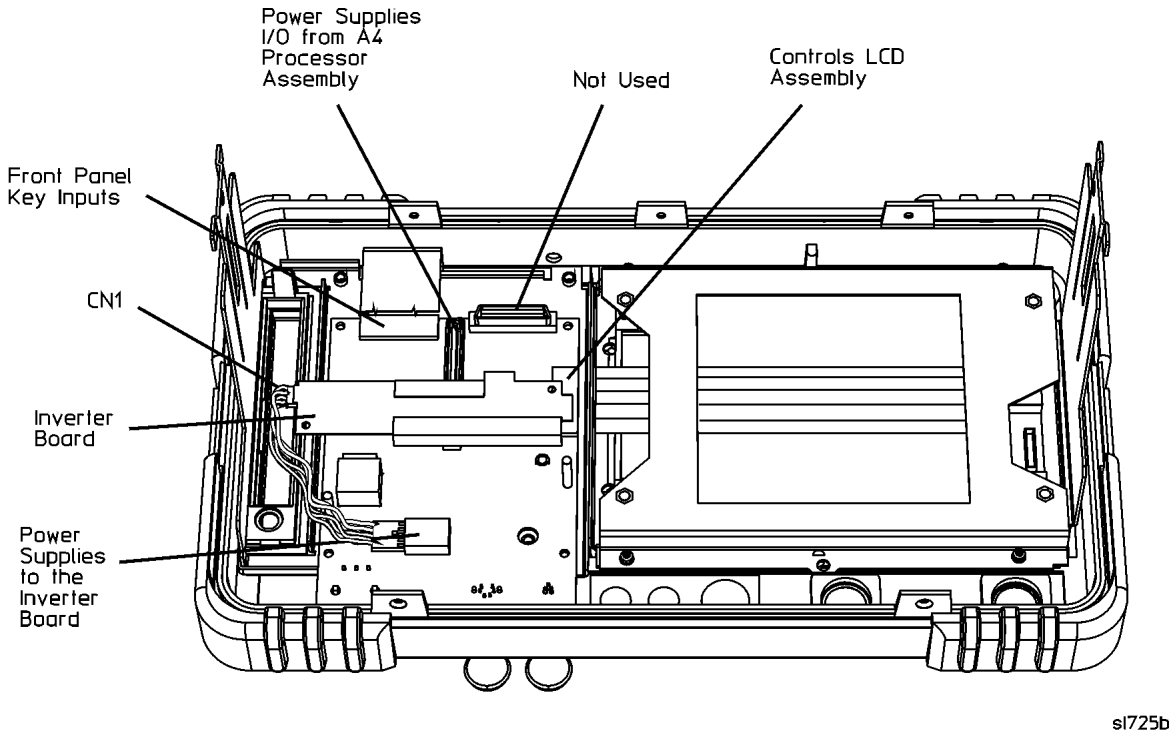


If the voltages are correct, the most probable cause of failure is the A1A2 LCD assembly.

**NOTE** The LCD has two backlights to illuminate the LCD. If both backlights are defective, the screen will be dark. The backlights can be replaced individually, however, it is improbable that both backlights are defective simultaneously. If one backlight is defective, the LCD will illuminate but the dimness will be noticeable, and you will need to replace A1A2DS1 or A1A2DS2. It is recommended that both backlights be replaced at the same time if it is likely that one simply wore out.

# Isolating an LO, IF, or Video Problem

This section provides techniques for isolating amplitude failures along the signal path.

## Checking Detector Modes

The instrument has three detector modes known as peak, negative peak, and sample. All of these detectors are located on the A4 processor board. Normal instrument power up routes the detected video signal through the positive peak detector only. If there are no graticules, signal information, or screen annotations, refer to the section "Troubleshooting the LCD Display" on page 25. The assumption from this point on is that the graticules and annotations have come up on the screen, but the noise floor and signal information is not present.

1. If no video is present on the analyzer screen switch to Sample or Negative Peak detector mode by pressing **Det/Demod**, **Detector**, and the proper softkey.
2. If the video signal appears in one of these two modes, the most probable cause is the A4 processor board itself.
3. If there is no video information present in any detector mode, inject a signal into the IF assembly as per "Verifying the A3 IF Assembly Performance" on page 28. This step will produce 2 Vdc (IF_VIDEO) at the output of the IF assembly. The 2 Vdc can be measured on the motherboard at A7J13 pin 24 if the analyzer is an E4403B, E4408B, or E4411B. If you do not measure a dc level at approximately 2 Vdc, the IF assembly is the most probable cause. Refer to Figure 1-2.
4. If you measure 2 Vdc on the output of the IF assembly but do not see a flat line at the top of the graticule, there may be a problem between the output of the IF assembly and the input to the A4 processor board. Check for an open trace or a bent pin on the A7 motherboard.
5. If you measure 2 Vdc right up to the IF_VIDEO input on the A4 processor board and still don't have a flat

   line near the top of the screen, the A4 processor board is the most probable cause.

## Checking Corrected versus Uncorrected Performance Using Video Shift On/Off

If you have a frequency response failure such as a power hole or power spike, you should turn the video shift off to see if the digital correction values are having an adverse effect on the analyzer performance.

1. Turn the video shift off by pressing **System**, **Service**, (Password = –2010), **Enter**, **Service**, **Video Shift On Off** (Off).
2. If the power hole or spike goes away, perform the *Frequency Response*

*Adjustments* using the *Adjustment Software*. Refer to section "Using the Internal Service-Diagnostic Routines" on page 32 for more information about the video shift function.

3. If the power hole or power spike does not go away after re-adjusting the frequency response (flatness), the RF assembly is the most probable cause.

## Verifying the A3 IF Assembly Performance

**NOTE** At frequencies >50 MHz in zero span, the gain of the A3 IF assembly will increase, necessitating the input level to be decreased for top of screen response. If the analyzer is in full span and the 21.4 MHz input frequency has a power level of –20 dBm, the displayed response will be the inverse of the RF assembly flatness. Setting the Video Shift Off as stated in "Checking Corrected versus Uncorrected Performance Using Video Shift On/Off" on page 27 will result in a flat line. In narrow spans, the flatness correction will be done by changing the A3 IF assembly gain. In large spans, when it is not practical to change the A3 IF assembly gain as the analyzer sweeps, video shift is used for flatness correction. Some video shift will be used for flatness correction even when A3 IF assembly gains are also used, but the maximum video shift will be less that 1 dB, unless there is insufficient A3 IF assembly gain available.

1. Turn the Auto Align off by pressing **System**, **Alignments**, **Auto Align**, **Off**.
2. Perform an Align Now All by pressing **System**, **Alignments**, **Align Now**, **All**.
3. Verify that the initial failure viewed on the analyzer screen is acceptable.
   a. If the signal on screen appears to be correct, turn the Auto Align back on by pressing **System**, **Alignments**, **Auto Align**, **All** and make sure the signal remains correct.
   b. If the signal is not correct press **System**, **Alignments**, **Load Defaults**, **Load Defaults**. (Press this key twice for the defaults to load.)

**NOTE** When the defaults are loaded, the IF filter response of some resolution bandwidth settings may appear distorted and the amplitude response may vary significantly as the resolution bandwidth is changed.

   c. If the signal is not correct with the defaults loaded proceed to the next step. Otherwise:
      1. Perform Align Now All by pressing **System**, **Alignments**, **Align Now**, **All** and wait for the alignment to complete. Three complete alignment sequences will be performed.
      2. Turn Auto Align back on by pressing **System**, **Alignments**, **Auto Align**, **All**.
      3. Verify the analyzer performance now that the A3 IF assembly has had the defaults loaded and the auto align has been turned back on.

4. If the signal on screen is still not correct perform "Checking Detector Modes" on page 27. Now inject a 21.4 MHz signal at –10 dBm from a synthesizer into the A3 IF assembly. With the reference level at 0 dBm, the input attenuator set to 0 dB, and center frequency at 50 MHz in zero span, a flat line should appear at the top graticule.
5. If the signal is not at the top graticule, measure A7J13 pin 24 on the motherboard with a voltmeter and verify 2 Vdc. Refer to Figure 1-1.
6. If 2 Vdc is not present the most probable cause would be the A3 IF assembly, but first check for a bent pin on the A7J2 motherboard connector pin 16 (IF_VIDEO). Refer to Figure 1-2.
7. If 2 Vdc is present the most probable cause is either an A7 motherboard trace problem to the A4 processor board, a bent pin on A7J7 motherboard connector, or the A4 processor board itself.

## Checking a Horizontal Trace With No Signal or Noise Floor Present

1. For E4402B, E4404B, E4405B, and E4407B connect the Amptd Ref out to the Input.

   Check the ADC circuitry on the A4 processor board by pressing **Preset**, **FREQUENCY 50 MHz**, **SPAN**, **Zero Span**, **Input/Output**, **Amptd Ref Out** (On), **AMPLITUDE**, **–27 dBm** for 50 Ω, or **+24.75 dBmV** for 75 Ω input (for E4401B or E4411B). For any other ESA, press **Preset**, **FREQUENCY**, **50 MHz**, **SPAN**, **Zero Span**, **Input/Output**, **Amptd Ref Out** (On), **AMPLITUDE**, **–20 dBm** (**–27 dBm** for E4401B or E4411B). This should provide a 2 Vdc output from the A3 IF assembly.
2. Connect a voltmeter to A7J13 pin 24 on the A7 motherboard to probe the output of the A3 IF assembly. If the IF assembly is working properly the voltmeter will read approximately 2 Vdc. Refer to Figure 1-2.

   If you measure 2 Vdc at this point, the most probable cause is the A4 processor board.

   If you DO NOT measure 2 Vdc at this point, check the integrity of the A3 IF assembly as stated in "Verifying the A3 IF Assembly Performance" on page 28.

**NOTE** It is possible that there is a bent pin (IF_VIDEO) on the A7 motherboard connectors or an open trace on the A7 motherboard itself. Follow the 2 Vdc from the output of the A3 IF assembly to the input of the A4 processor board.

## Checking an Analyzer That Displays a Low Signal Level

A low signal level can be caused by a number of assemblies inside the analyzer.

1. Verify that this problem is not related to the detectors by performing the procedure as stated in "Checking Detector Modes" on page 27.

2. The two most common assemblies for a low signal level would be the RF assembly and the A3 IF assembly respectively. To verify the RF assembly performance see Chapter 2, “Troubleshooting the RF Section,” on page 57
3. If step 2 measures properly, refer to “Verifying the A3 IF Assembly Performance” on page 28.

## Checking an Analyzer That Displays a High Noise Floor

A high noise floor is often caused by a low gain situation. When the analyzer adjusts for excessive low gain, the displayed noise level will rise too high.

1. Verify the ADC performance per the procedure in “Checking an Analyzer That Displays a Low Signal Level” on page 29 before taking any measurements.
2. The RF assembly is the most probable cause due to an over-correction during the frequency response adjustment. To verify the RF assembly performance see Chapter 2, “Troubleshooting the RF Section,” on page 57.

   If the 21.4 MHz IF alignment signal from the RF assembly was not getting to the A3 IF assembly the noise floor may rise. Verify the 21.4 MHz alignment signal is getting switched to the A3 IF assembly as per “Checking the 21.4 MHz Alignment Signal” on page 31.
3. Verify the A3 IF assembly performance per the procedure stated in “Verifying the A3 IF Assembly Performance” on page 28 if the RF assembly appears to be O.K.

## Checking an Analyzer Signal Amplitude That Appears Too High

1. Verify the A3 IF assembly performance per the procedure stated in “Verifying the A3 IF Assembly Performance” on page 28.
2. Verify the RF assembly performance as per Chapter 2, “Troubleshooting the RF Section,” on page 57
3. Verify the A4 processor board performance per the procedure stated in “Checking a Horizontal Trace With No Signal or Noise Floor Present” on page 29.

## Checking an Analyzer Signal That Is Distorted

1. Verify the A3 IF assembly performance per the procedure stated in “Verifying the A3 IF Assembly Performance” on page 28.
2. Verify the RF assembly performance as per Chapter 2, "Troubleshooting the RF Section.”

## Checking an Analyzer Signal That Is Off Frequency

1. Verify the 10 MHz reference is adjusted properly as per the *Reference Frequency Adjustment* using the *Adjustment Software*.
2. If the 10 MHz reference cannot be adjusted within specifications, the RF assembly is the most probable cause.

## Checking the 21.4 MHz Alignment Signal

This alignment signal is generated on the RF assembly and is switched in during various background alignment sequences to align the A3 IF assembly. If this signal is not present during the alignments there will be problems with analyzer gains and possibly noise floor issues as well.

1. Verify this signal by turning the analyzer on and pressing **Preset**.
2. Turn Auto Align to off by pressing **System**, **Alignments**, **Auto Align**, **Off**.
3. Disconnect the flexible gray cable at the input of the A3 IF assembly (A3J2).
4. Connect the female end of an SMB tee to the A3 IF assembly, one end to a calibrated spectrum analyzer using an SMB cable, and the other end to the flexible gray cable that was previously connected.
5. Press **System**, **Alignments**, **Align Now**, **All**. During the Align IF you will see the 21.4 MHz alignment signal on your spectrum analyzer during most of this alignment. The power level should be approximately –55 dBm. If this signal is significantly lower, the RF assembly is the most probable cause.
6. Reconnect the flexible gray cable to the input of the A3 IF assembly (A3J2).
7. After measuring the 21.4 MHz alignment signal, turn the Auto Align back on by pressing **System**, **Alignments**, **Auto Align**, **All**.

# Using the Internal Service-Diagnostic Routines

The analyzer has several routines which are helpful in diagnosing faults:

- Timebase (in Alignments menu)
- Timebase (in Service Menu, password-protected)
- Video Shift On Off (in Service Menu, password-protected)
- Align Now
- Visible Align
- Noise Source
- Load Defaults
- Restore System Defaults
- Front Panel Test (in Diagnostic menu)

The service menu is password protected. To access this menu, press **System**, **Service**. At the password prompt, enter –2010 and press **Enter**.

## Timebase (in Alignments Menu)

This function allows adjustment of the coarse and fine digital to analog converters (DACs) controlling the voltage-controlled crystal oscillator (VCXO) timebase (OCXO, if Option 1D5 is installed). The primary use for this function is verifying the timebase setability specification of the VCXO. Refer to the 10 MHz reference performance test in the user's guide. However, it can also be used to verify proper operation of the phase locked loops (PLLs).

The coarse DAC has a resolution of approximately 9 Hz per DAC count (for the VCXO). The fine DAC has a resolution of approximately 1.2 Hz per DAC count (for the VCXO). Any changes made to these DACs will remain in effect until the power is cycled or the analyzer is Preset. To change the timebase DAC values stored in EEROM, it is necessary to use the Timebase function in the Service menu.

To check proper operation of the PLLs:

1. Connect a frequency counter to the 10 MHz REF OUT of the analyzer. Set the counter for 1 Hz frequency resolution.
2. Connect a 1 GHz, –10 dBm signal to the analyzer INPUT 50 Ω.
3. On the analyzer, press **Preset**, **FREQUENCY**, 1 GHz, **SPAN** 100 kHz. If necessary, adjust the center frequency to place the 1 GHz signal at the center frequency.

4. On the analyzer, press **System**, **Alignments**, **Timebase**, **Coarse**. Note the frequency displayed on the frequency counter and the position of the signal on screen. Use the knob to change the coarse timebase such that the signal displayed on the analyzer moves by 1 division (10 kHz). The coarse DAC value should require a change of approximately 11 counts (for the VCXO). If the signal does not move as the coarse DAC value is changed, the PLLs are not functioning properly.
5. Note the frequency displayed on the frequency counter. If the PLLs are operating properly, the difference between this new frequency and the frequency noted in step 4 should be approximately 100 Hz (for the VCXO). If this frequency difference is significantly greater or less than 100 Hz, the PLL is not functioning properly.

## Timebase (in Service Menu)

The Timebase function in the Service menu functions the same way as the Timebase function in the Alignments menu. However, with the Timebase function in the Service menu, the coarse and fine DAC values can be stored in EEROM by pressing **Save**. This function is used primarily to adjust the 10 MHz reference, but can also be used to check the PLLs as mentioned above. (A password is required to access the Service menu. See step 2 on page 34 below.)

## Video Shift On/Off

Amplitude errors in the analyzer are compensated for by adding IF gain on the A3 IF assembly, by “shifting” the digitized video signal, or by a combination of both IF gain and video shift. By turning video shift on or off, it is possible to isolate problems in analog hardware from problems caused by faults in the auto alignment routines or adjustment procedures.

IF gain is used only to compensate for frequency response (“flatness”) errors when in relatively narrow spans. In the narrow spans, a single IF gain setting can compensate for the majority of the flatness error. In wider spans, however, a single IF gain setting would not yield acceptable flatness. Therefore, in the wider spans, video shift is used to compensate for flatness errors.

When both IF gain and video shift are used, the amount of video shift is typically less than 1 dB; most of the amplitude correction is done with IF gain.

Video shift is also used to correct for log amplifier errors, especially errors more than 50 dB below the reference level. Therefore, when observing a signal in a narrow span, with the noise level more than 70 dB below the reference level, it is typical to see the signal peak change by only a few dB while the noise changes by approximately 25 dB as video shift is turned on and off.

To determine whether an anomaly (such as a glitch or spurious response on the trace) is caused by the analog hardware (“raw performance”) or caused by incorrect video shift being applied, proceed as follows:

1. Set up the analyzer so that the anomaly appears on the displayed trace.

2. Press **System**, **Service**. When prompted for the password, enter –2010 and press **Enter.**
3. Press **Video Shift** (Off).
4. If the anomaly disappears, it was caused by an unusually high amount of video shift being applied. This could be the result of an amplitude glitch during execution of an auto alignment routine or an adjustment procedure. Perform an **Align Now**, **All**. Then, set **Video Shift** (On) and check whether or not the anomaly is still present. If so, it is necessary to perform the *Frequency Response Adjustment* using the *Adjustment Software*.
5. If the anomaly does not disappear when Video Shift is set to Off, the hardware is at fault. The RF assembly is the most likely cause.

## Align Now

During normal analyzer operation, a small portion of the analog circuitry is being realigned between each sweep. In this mode ("**Auto Align On**"), a complete realignment occurs approximately every 10 minutes to 1 hour. Realignments are done more frequently when the analyzer is first turned on (when it is cold) and then less frequently as the analyzer warms up. Normal analyzer operation is not interrupted in this "background" mode.

**Align Now** halts normal analyzer operation and forces a complete realignment of the entire system (**Align Now**, **All**) or of a piece of the system (**Align Now**, **RF**, for example).

If any amplitude errors, bandwidth symmetry errors, or log fidelity errors occur, perform an **Align Now**, **All**. This will take approximately 60 seconds, depending upon installed options. Most of this time is spent aligning the IF subsystem. In some cases, it may be necessary to perform **Align Now**, **All** two or three times to correct serious errors.

If performing **Align Now**, **All** does not fix the problem, it may be necessary to first **Load Defaults** (see below), and then perform **Align Now**, **All**. The analyzer will execute three complete alignment sequences.

When performing **Align Now**, **All** or **Align Now**, **RF**, the presence of an external 50 MHz signal is checked. If an external 50 MHz signal > –25 dBm is detected, the RF alignment will be skipped and the message “Align RF skipped 50 MHz detected” will be displayed. If this occurs, remove the 50 MHz signal from the analyzer input and perform **Align Now**, **All** or **Align Now**, **RF** again.

## Visible Align

The visible align function is turned off in normal operation. This function can be turned on so the user can view which hardware is being adjusted during the background alignment or during the auto alignment process.

To turn Visible Align on, press: **System**, **Service**, –**2010, Enter**, **Service, Align**, **Visible Align** (On).

If a failure occurs during the alignment process, a fail message will appear on the screen. This message can aid in determining which assembly is causing the failure. Visible align will remain on until it is turned off, instrument preset is pressed, or the instrument power is cycled. About 95% of the auto alignment process is adjusting IF-section related circuitry.

## Noise Source

If the A7A13 Noise Source Driver Assembly is installed, and the firmware revision is A.12.00 or later, this function allows you to turn the noise source connected to the +28V PULSED or the SNS SERIES NOISE SOURCE connector output on and off. This can be used as part of a functional check of A7A13.

## Load Defaults

If a problem occurs during an auto alignment routine (due to an intermittent hardware problem for example) the correction constants calculated by the auto alignment routine will be incorrect. Performing **Align Now**, **All** will not always allow recovery from such a failure.

Pressing **Load Defaults** loads default values for the alignment system, turns on the frequency corrections, and resets the timebase to the factory values. Once the default values for the alignment system are loaded, **Align Now**, **All** should be able to correctly align the analyzer.

**Load Defaults** can also be used with **Auto Align Off** to set the analyzer hardware to a consistent, nominal condition for future troubleshooting.

## Restoring System Defaults

**Restore Sys Defaults** resets the analyzer to the original factory–set user configuration. It also performs an instrument preset. The following table shows the default user–configuration settings which result from pressing **Restore Sys Defaults**. To access this function, press **System**, **Restore Sys Defaults**.

**Table 1-3**

| Configuration | Default Value |
|---|---|
| Amplitude units | dBm |
| Power-on | IP (Preset) |
| Analyzer address (Option A4H) | 18 |
| Baud rate (Option 1AX) | 9600 |
| DTR Control (Option 1AX) | Hardware pacing on |
| RTS Control (Option 1AX) | Hardware pacing, input buffer full |
| Receive pacing (Option 1AX) | None |
| Transmit pacing (Option 1AX) | None |
| Color palette | Default |
| Date mode | Month-day-year format |
| Print mode | Print screen |
| Printer | Auto |
| Print orientation | Portrait |
| Print Language | PCL3 |
| Color-capable | No |
| Prints per page | 1 |
| Time/Date display | On |
| Viewing angle | 4 |
| Volume | 0 |

Use **Restore Sys Defaults** to return the analyzer to a known “safe” state.

# Troubleshooting the A4 Processor Assembly

After you have determined that the problem is caused by the A4 processor assembly, use the following procedures to determine if A4 must be replaced or if it can be restored to normal operation. The *ESA Spectrum Analyzer & EMC Analyzer Component-Level Information* is required to assist with some of these procedures. Refer to Chapter 5 for a list of available component-level service information.

## Initial Checks

The troubleshooting steps immediately following will help you determine whether or not the A4 processor assembly should be replaced or if it can be restored to normal operation. Some steps reference other troubleshooting procedures which appear later in this section.

1. If **`ADC-2V fail`**, **`ADC-Gnd fail`**, or **`ADC-time fail`** error messages are displayed, check for a 10 MHz signal at A7J15 pin 52. Refer to Figure 1-2 on page 24 for information on probing A7J15 (the connector is not loaded). The 10 MHz signal is required to clock the ADC. If this 10 MHz signal is not present, suspect the RF assembly.

2. Verify the analyzer product number, serial number, and firmware revision. Press **System**, **Show System**. The display should be similar to the following:

**Figure 1-4 Example Show System Display**

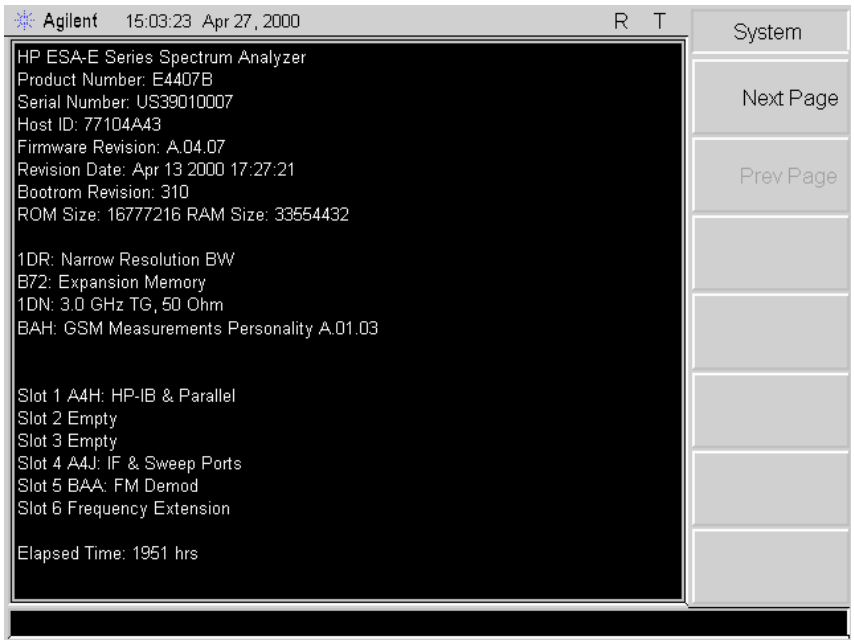


If the information is not correct, perform the Processor Initialization procedure in the adjustment software.

3. Turn the analyzer power Off and reseat A4. Referring to Figure 6-15 on page

271, remove the vibration support. Referring to Figure 6-23 on page 283, remove the single screw **(4)** which secures the processor assembly **(8)** to the chassis. Carefully lift the processor assembly until the assembly disengages from the two motherboard connectors. Carefully plug the processor assembly into the motherboard. Replace the single screw **(4)** to secure the processor assembly to the chassis. Turn the analyzer power On. If normal operation is not restored, continue with step 4.

4. Perform the "Bootrom Self-Test Check" as described in the following text.
5. If proper operation has not been restored by following the preceding steps, replace A4.

## Bootrom Self-Test Check

When the analyzer is powered-on, the bootrom performs several self-tests. Before each test, the LEDs along the top edge of the A4 processor assembly will light in a pattern which indicates the test to be performed. As tests succeed, the pattern will change. If a test fails, the LED pattern will remain in a state which corresponds to the test that failed. If the display is not functioning, observing the LED pattern will provide information on the status of the self tests performed.

1. Power up the analyzer. Verify that LED DS1 is flashing approximately every one second. If DS1 in continuously on or off, replace the basic or enhanced memory A4 processor assembly.

   The following table lists the LED patterns and their associated tests:

**Table 1-4 Self-Tests versus LED Pattern**

| Self-Test Performed | LED Pattern | | | | | | | |
|---|---|---|---|---|---|---|---|---|
| | **DS 1** | **DS 7** | **DS 13** | **DS 11** | **DS 9** | **DS 12** | **DS 10** | **DS 8** |
| Start of Test | 1 | 1 | 1 | 1 | 1 | 1 | 1 | 1 |
| Bootrom Flash EPROM Checksum | 1 | 1 | 1 | 1 | 1 | 1 | 1 | 0 |
| RAM used by Bootrom (destructive) | 1 | 1 | 1 | 1 | 1 | 1 | 0 | 0 |
| Remainder of RAM (non-destructive) | 1 | 1 | 1 | 1 | 1 | 0 | 0 | 0 |
| Main Firmware Checksum | 1 | 1 | 1 | 0 | 0 | 0 | 0 | 0 |
| All Tests Completed Successfully | 0 | 0 | 0 | 0 | 0 | 0 | 0 | 0 |

2. Cycle the analyzer power and observe the LEDs. If all the LEDs do not light at the start of the test, the bootrom self-tests did not run. Turn the analyzer power Off and reseat the bootrom, A4U77. Turn the analyzer power On. If the LEDs still do not light, replace the basic or enhanced memory A4 processor assembly.
3. If the self-test indicates a RAM failure, perform the "Clearing Dynamic RAM" procedure below.

4. If all tests completed successfully, continue with step 5 on page 38 of the initial checks for A4 troubleshooting.

   Observing the LEDs as described above is useful if the LCD display is not functioning.

## Clearing Dynamic RAM

The RAM in the analyzer can be cleared by setting switch 2 on A4S1 to the on position (toward the rear of the analyzer). Alternatively, the RAM can be cleared by the following procedure:

1. Turn the analyzer power Off.
2. Press and hold the **Esc** and **Return** keys simultaneously.
3. Turn the analyzer power On and wait 5 seconds while continuing to hold the **Esc** and **Return** keys.
4. Release the **Esc** and **Return** keys.
5. Cycle the analyzer power. The entire RAM has been set to 0.

## Clearing Flash EPROM

Flash EPROM can be cleared by setting switch 3 on A4S1 to the on position (toward the rear of the analyzer). Wait approximately 10 minutes to ensure the flash EPROM is erased. This should only be performed when all contents of flash EPROM need to be erased. Alternatively, flash EPROM may be cleared by the following procedure:

1. Turn the analyzer power Off.
2. Press and hold the **Esc** and **View/Trace** keys simultaneously.
3. Turn the analyzer power On and wait 5 seconds while continuing to hold the **Esc** and **View/Trace** keys.
4. Release the **Esc** and **View/Trace** keys.
5. Wait approximately 10 minutes to ensure flash EPROM is fully erased.
6. Cycle the analyzer power. The entire Flash EPROM has been set to 0.

# Troubleshooting the A2 1.5 GHz Tracking Generator (E4401B and E4411B) (Option 1DN/1DQ)

The A2 tracking generator (TG) assembly (Option 1DN/1DQ), is comprised of three board assemblies: the A2A1 tracking generator control board, the A2A2 tracking generator RF board, the A2A3 tracking generator output board. The troubleshooting procedures which follow will help to isolate a failure to one of these three board assemblies.

## If Output is Unleveled (TG Unleveled message displayed)

A window comparator on the A2A2 tracking generator RF board is used to monitor the ALC lines. If an unleveled condition occurs, L_UNLEVELED will be set true (low). The unleveled indicator is checked at the end of each sweep. For this reason, it is possible that the output could be unleveled during a portion of a sweep, and although the output returns to a leveled condition by the end of the sweep, TG Unleveled will be displayed at the end of the sweep.

If TG Unleveled is displayed, proceed as follows:

1. Verify that the tracking generator frequency is between 9 kHz and 1.5 GHz for 50 Ω tracking generators between 1 MHz and 1.5 GHz for 75 Ω tracking generators. Also verify that the source amplitude setting is between 0 dBm and –70 dBm for 50 Ω and between +42.75 dBmV and –27.25 dBmV for 75 Ω.
2. Check at which frequencies the output is unleveled. Set the analyzer to zero span and step the center frequency in 50 MHz increments. Note at which frequencies the output is unleveled.
3. Check at which power levels the output is unleveled. With the analyzer in zero span, set the center frequency to 50 MHz or one of the frequencies noted in step 2 on page 40. Lock the source attenuation to 0 dB by pressing **Source**, **Attenuation**, **Auto Man** (Man). Press **Amptd**, **Step**, **Auto Man** (Man), **Amplitude On Off** (On), **0 dBm** and step the Source Amptd setting in 1 dB increments from 0 dBm to –15 dBm for 50 Ω input. Step the Source Amptd setting in 1 dB increments from 42.75 dBmV to 27.75 dBmV for 75 Ω input. Note at which power levels the output is unleveled. The output may be unleveled when the power level is greater than +1 dBm for 50 Ω or 43.75 dBmV for 75 Ω.
4. Perform the *Tracking Generator ALC* and the *Tracking Generator Frequency Slope* adjustments using the *Adjustment Software*.
5. Check the presence of the 10 MHz reference. Temporarily remove the A2 tracking generator assembly. Refer to Chapter 6 for removal instructions. If a 10 MHz signal is not present on A7J10 pin 52, suspect the RF assembly. Refer to Figure 1-2 on page 24. Reinstall A2.
6. Check that the TG LO signal is present.

a. Set the analyzer to a center frequency of 50 MHz and zero span.

b. Use an active probe, such as the HP/Agilent 85024A, and a microwave spectrum analyzer to probe A2A1J4. J4 is not loaded, but the holes for the jack are present; probe the center hole. One of the other four holes may be used for a ground connection.

c. Set the microwave spectrum analyzer to a center frequency of 2.5 GHz and a span of 1 GHz.

d. An LO signal of 2.45 GHz at approximately –20 dBm should be present.

e. If the LO signal is not present, or is significantly off frequency, suspect the A2A1 tracking generator control board.

f. If the LO signal is OK, suspect the A2A2 tracking generator RF board.

## If the TG LO is Unlocked (TG LO Unlocked message displayed)

The TG LO is referenced to the 10 MHz reference generated on the RF assembly. The TG LO resides on the A2A1 tracking generator control board.

1. Check the presence of the 10 MHz reference. Temporarily remove the A2 tracking generator assembly. Refer to Chapter 6 for removal instructions. If a 10 MHz signal is not present on A7J10 pin 52, suspect the RF assembly. Refer to Figure 1-2. Reinstall A2.
2. Check that the TG LO signal is present.

   a. Set the analyzer to a center frequency of 50 MHz and zero span.

   b. Use an active probe, such as the HP/Agilent 85024A, and a microwave spectrum analyzer to probe A2A1J4. J4 is not loaded, but the holes for the jack are present; probe the center hole. One of the other four holes may be used for a ground connection.

   c. Set the microwave spectrum analyzer to a center frequency of 2.5 GHz and a span of 1 GHz.

   d. An LO signal of 2.45 GHz at approximately –20 dBm should be present.

   e. If the LO signal is not present, or is significantly off frequency, suspect the A2A1 tracking generator control board.

   f. If the LO signal is OK, suspect the A2A1 tracking generator control board (the lock-detect circuitry is also on A2A1).

## If the Tracking Generator Is Not Properly Recognized by the Firmware

When the analyzer is powered-up, the firmware queries each board assembly for its identification information. If a board does not respond to a query, it is assumed to not be present. If the A2 tracking generator assembly does not respond to the firmware's query, the functions under the **Source** menu will not be available.

1. Check the **Show System** screen. Press **System**, **Show System**. Verify that "1DN: 1.5 GHz TG, 50 Ω" or "1DQ: 1.5 GHz TG, 75 Ω" is displayed.
2. If the information in the **Show System** screen does not identify a tracking generator, try reseating A2 in its motherboard connector. If **Show System** still does not identify a tracking generator, suspect the A2A1 tracking generator control board.
3. If the information in the **Show System** screen identified a 75 Ω tracking generator (Option 1DQ), but the tracking generator is actually a 50 Ω tracking generator (Option 1DN). The A2A3 tracking generator output board might not be properly connected to A2A2J4. A2A2J4 pin 2 is normally grounded by the A2A3 tracking generator output board to identify the A2 assembly as a 50 ohm tracking generator. If A2A2J4 pin 2 is not connected, this line will be pulled high, causing the A2 assembly to be identified as a 75 Ω tracking generator.

## If Flatness is Out of Tolerance

1. Check the output connector for damage. Replace the connector if it is damaged.
2. Perform the *Tracking Generator ALC* and *Tracking Generator Frequency Slope* adjustments using the *Adjustment Software*.
3. If the adjustments did not bring flatness within tolerance, suspect the A2A2 tracking generator RF board or the A2A3 tracking generator output board.

## If Vernier Accuracy is Out of Tolerance

1. Perform the Tracking Generator ALC Adjustment using the Adjustment Software.
2. If the adjustment did not bring vernier accuracy within tolerance, suspect the A2A2 tracking generator RF board.

## If Harmonics and Spurious Outputs are Too High

High harmonic output levels will generally be caused by problems on the A2A2 tracking generator RF board. However, some non-harmonic spurious output levels may be caused by the TG LO on the A2A1 tracking generator control board.

1. If harmonic output levels are out of tolerance, suspect the A2A2 tracking generator RF board.
2. If non-harmonic output levels are out of tolerance, note the frequency difference between the fundamental output frequency and the spurious output. Check the LO to see it also displays a spurious output with the same frequency difference:
   a. Set the analyzer to the center frequency used to determine the out-of-tolerance condition and zero span.
   b. Use an active probe, such as the HP/Agilent 85024A, and a microwave spectrum analyzer to probe A2A1J4. J4 is not loaded, but the holes for the

jack are present; probe the center hole. One of the other four holes may be used for a ground connection.

c. Set the microwave spectrum analyzer to a center frequency of 2.4 GHz higher than the analyzer center frequency. Set the span to at least twice the frequency difference between the non-harmonic spurious output and the fundamental output.

d. An LO signal at approximately –20 dBm should be present.

e. If the LO shows a spurious response at an offset equal to the difference between the tracking generator's fundamental output and the non-harmonic spurious output, suspect the A2A1 tracking generator control board.

f. If the LO does not show a spurious response as described above, suspect the A2A2 tracking generator RF board.

## If Power Sweep is Not Functioning Properly

The power sweep function is implemented on the A2A2 tracking generator RF board, but is controlled via digital signals from the A2A1 tracking generator control assembly.

1. Perform the Absolute Amplitude and Vernier Accuracy performance test in the calibration guide.
2. If the performance test passes, suspect the A2A2 tracking generator RF board.
3. If the performance test fails, perform the *Tracking Generator ALC Adjustment* using the *Performance Verification and Adjustment Software*. Rerun the performance test.
4. If the performance test fails again, suspect the A2A1 tracking generator control board (digital control signals might be corrupted) or the A2A2 tracking generator RF board (the power level control DACs might not be responding properly).

## If There is No Output Power

No output power can be caused not only by a failure in the mixer, output amplifier, or output attenuators, but also by one of the two synthesizers being extremely off-frequency.

1. Check the presence of the 10 MHz reference. Temporarily remove the A2 tracking generator assembly. Refer to Chapter 6 for removal instructions. If a 10 MHz signal is not present on A7J10 pin 52, suspect the RF assembly. Refer to Figure 1-2 on page 24. Reinstall A2.
2. Check that the TG LO signal is present.
   a. Set the analyzer to a center frequency of 50 MHz and zero span.
   b. Use an active probe, such as the HP/Agilent 85024A, and a microwave spectrum analyzer to probe A2A1J4. J4 is not loaded, but the holes for the jack are present; probe the center hole. One of the other four holes may be used for a ground connection.
   c. Set the microwave spectrum analyzer to a center frequency of 2.5 GHz and a span of 1 GHz.
   d. An LO signal of 2.45 GHz at approximately –20 dBm should be present.
   e. If the LO signal is not present, or is significantly off frequency, suspect the A2A1 tracking generator control board.
   f. If the LO signal is OK, suspect the A2A2 tracking generator RF board or the A2A3 tracking generator output board.

# Troubleshooting the A2 3.0 GHz Tracking Generator (E4402B, E4403B, E4404B, E4405B, E4407B, and E4408B) (Option 1DN)

The tracking generator (TG) assembly (Option 1DN) is comprised of three major assemblies: the A2A1 tracking generator control board, the A2A2 tracking generator assembly, and the A2A3 output attenuator.

The A2A1 tracking generator control board plugs directly into the motherboard where it receives the I/O inputs and power supplies. The A2A1 tracking generator control board performs three main functions:

- provides the power supplies and modulator drive voltages to the A2A2 tracking generator
- provides an amplitude-compensated leveled 1st LO output to the A2A2 tracking generator
- provides the correct switching logic for the A2A3 output attenuator

The A2A3 output attenuator is a 56 dB step attenuator (in 8 dB steps) that simply controls the RF output level to the front panel RF output connector. This attenuator is automatically coupled to the desired output source power.

The A2A2 tracking generator receives all the correct switching logic and input frequencies to yield the desired tracking generator output. It is a self-contained non-serviceable assembly and must be replaced if proven defective.

To help isolate a TG-related failure, verify the TG performance by pressing the following analyzer keys, make the measurements listed in Table 1-5 on page 46, and compare the results with the levels indicated in that table:

**Preset**
**FREQUENCY 50 MHz**
**SPAN**, **Zero Span**
**Source**
**AMPLITUDE** (On)

Measure locations A-D with a calibrated spectrum analyzer.

With the settings stated above, the tracking generator source power should be –10 dBm and the tracking output attenuator (A2A3) will be set to 8 dB.

**Table 1-5 3.0 GHz Tracking Generator Troubleshooting**

| Signal Description | Measurement Location | Expected Frequency | Expected Amplitude | Notes |
|---|---|---|---|---|
| 1st LO Input | A | 3971.4 MHz | 0 dBm | LO Input from A8A1A2 LO board on E4402B and E4403B. LO Input from A8A4 LO Amp/IF Switch on the E4404B, E4405B, E4407B and E4408B. Measured at the cable end. |
| 1st LO Output | B | 3971.4 MHz | +13 dBm | LO Output from A2A1 TG controlboard to A2A2J4 TG Input. Measured on the output of the TG control board. |
| RF Output | C | 50 MHz | –2 dBm | RF Output from A2A2J2 TG. Measured at J2 |
| 600 MHz | D | 600 MHz | –7 dBm | 600 MHz from A8A1A1J2 reference/3rd converter to A2A2J5. Measured at the cable end. |

**Figure 1-5 3.0 GHz Tracking Generator Measurement Locations**

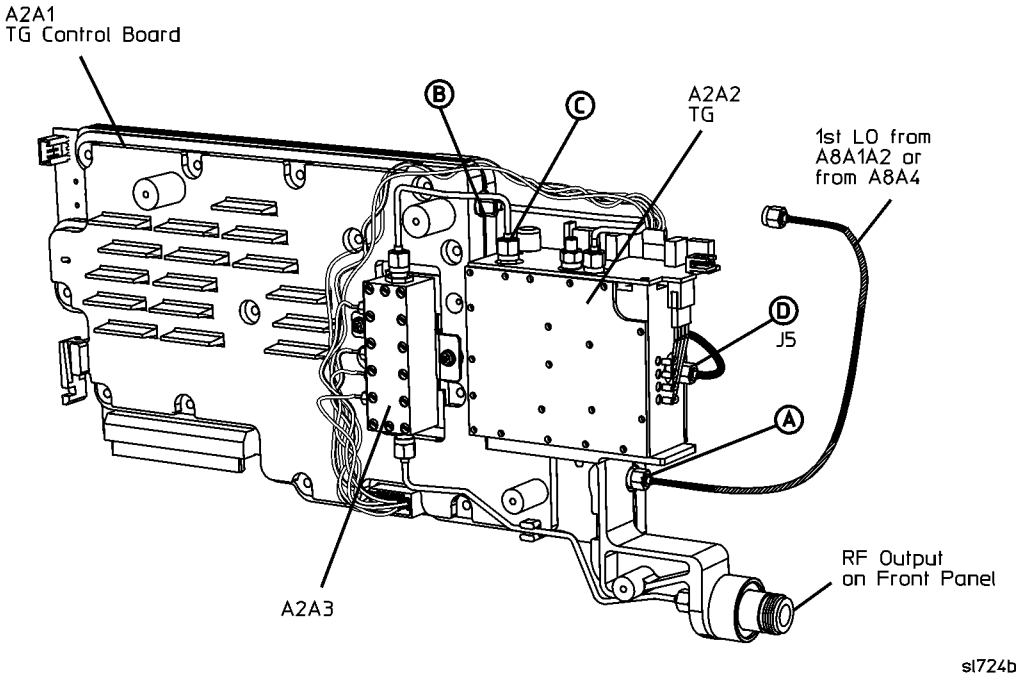

# Troubleshooting the Digital Demod Hardware (E4402B, E4404B, E4405B, and E4407B) (Option B7D and B7E)

The ESA Spectrum Analyzer base unit may effect any of the measurements performed with Options B7D and B7E. Verify that the base instrument functions correctly prior to troubleshooting the digital demod options.

The Digital Demod RF (DDRF) board, Option B7E, downconverts the 21.4 MHz IF to the various intermediate frequencies (IF) required for the Digital Signal Processing (DSP) board, Option B7D. The DDRF board also provides the sample rate oscillator for the DSP board. The DDRF board allows the user to input a reference frequency from 1 MHz to 30 MHz. The DDRF board divides the signal appropriately to produce a 10 MHz reference signal. This signal can then be routed to the 10 MHz reference on the ESA spectrum analyzer. The DDRF board provides no additional functionality without a measurement personality loaded.

The DSP board, Option B7D, performs the digital demodulation of the signal. The option is used when performing phase and frequency measurements with the GSM personality, Option BAH and modulation accuracy measurement with the cdma-One personality, Option BAC. Fast time domain sweeps from the DSP FADC is the only functionality available without a personality.

## Troubleshooting Analyzer Mode Errors Caused By the DDRF or DSP Boards

If the analyzer will not power-up or powers off prior to completing the initial alignment, remove the DDRF and DSP boards. If this corrects the problem, insert the boards in sequence to determine which of the two boards is causing the problem. Replace the defective board. Refer to “Digital Demod Assemblies Replacement” on page 298.

If the problem observed is specific to running the BAC or BAH measurement personalities, refer to “Troubleshooting the Digital Demodulation Hardware When Running the cdmaOne or GSM Personalities” on page 48. If option B7D or B7E are suspected of causing amplitude or frequency errors in the spectrum analyzer (SA) mode this could be caused by the routing of the IF signal through the DDRF board. The IF signal is input to the DDRF board at connector J11. The IF signal is switched out through connector J10 when the instrument is in the SA mode. To verify that the DDRF IF OUT A7A8J10 signal is correct perform the following procedure:

1. Connect the AMPTD REF OUT signal to the input of the ESA spectrum analyzer.
2. Power on the spectrum analyzer.
3. Set the Center Frequency of the spectrum analyzer to 50 MHz.
4. Set the SPAN to Zero Span.
5. Turn Auto Align to Off.
6. Set the internal Attenuation to 0 dB.
7. Turn the 50 MHz AMPTD REF ON by pressing **INPUT** and **Amptd Ref** On.
8. A flat trace should be displayed at –20 dBm.
   - If this trace is present, it is probable that the DDRF IF circuitry is functioning correctly.
   - If this trace is not present, refer to Chapter 2, “Troubleshooting the RF Section,” on page 57.
   - If the 21.4 MHz IF output from A8A1A1 is correct, continue to the next step.
9. Verify that the Signal present at the DDRF connector J10 is approximately –20 dBm with an 8560 E-Series spectrum analyzer or equivalent. See Figure 1-7.
10. If this signal is not present or the amplitude difference is significant:
    - Verify that the input attenuation is 0 dB
    - Verify that Cable W29 DDRF IF IN cable is not faulty.
    - Replace the DDRF board.

## Troubleshooting the Digital Demodulation Hardware When Running the cdmaOne or GSM Personalities

The functional check of the option boards will require signal generator E4433B with Options UN5, UND, and 1E5 for cdmaOne or Options UN8 and 1E5 for GSM.

Verify that the GSM or cdmaOne measurement personality is installed in the spectrum analyzer by pressing the **MODE** key on the ESA. A softkey menu should be displayed with cdmaOne or GSM selection available. If neither of these personalities exist, go to the following URL to download a copy to install:

www.agilent.com/find/esa

The installation instructions are available on this site. Verify that the personalities have been licensed by pressing **System**, **Personalities**, **GSM** or **cdmaOne**. GSM or cdmaOne should be listed as being licensed. If no license information is present, verify, with the customer, that option BAH or BAC has been installed and licensed.

**Verifying the Operation with the cdmaOne Option BAC Personality**

### Step 1: Functional Check

1. Connect the signal generator RF out to the input of the ESA spectrum analyzer and the 10 MHz OUT of the spectrum analyzer to the 10 MHz reference IN on the signal generator.
2. Configure the signal generator by pressing the following keys:

   **Mode**
   **Arb Waveform Generator**
   **CDMA**
   **Formats**
   **IS-95A**
   **CDMA Off/On** (ON)
   **Setup Select**
   **Pilot**
   **Frequency**, 870.03, and **MHz**
   **Amplitude**, –10, and **dBm**
   **RF On/Off (ON)**

3. Configure the spectrum analyzer by pressing the following keys:

   **Mode**
   **cdmaOne**
   **FREQUENCY** (Verify that the RF channel selected is 1 and the frequency is 870.03 MHz)
   **MEASURE**
   **Modulation Accuracy (Rho)**

The spectrum analyzer display should be very similar to Figure 1-6.

Verify that the EVM, Mag Error, Phase Error, and Rho are close to the values shown in Figure 1-6. If the results are similar to the ones listed above, the digital demodulation hardware is functioning correctly. You can verify the performance using the Performance Verification Test procedure in the calibration guide.

**Figure 1-6** **Modulation Accuracy (Rho) Display**

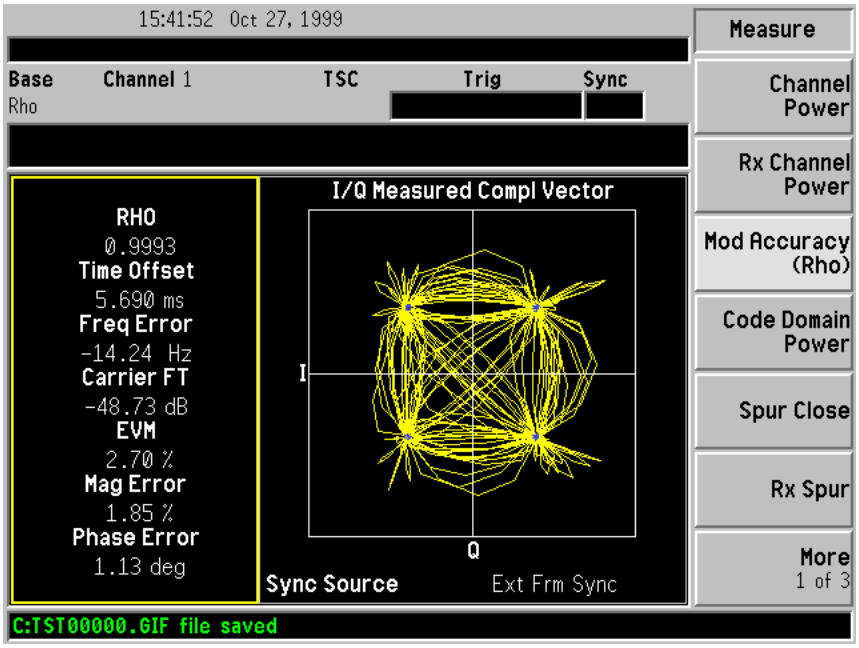


- If a “DSP Failure” error message is displayed or if any LED (DS1 through DS8) on the DSP board are ON, replace the digital demod DSP board.
- If the EVM or Magnitude Errors are very large, this could be indicative of spectrum analyzer phase noise or 321.4 MHz amplitude flatness problems with the second IF.
- If the measurement does not start or the message “Signal could not be Correlated” is displayed, verify that the spectrum analyzer functions correctly in the SA mode then proceed to “Step 2: Verify that the DSP IF OUT is functioning correctly.”
- If the results are not close to the values listed in Figure 1-6, verify that the spectrum analyzer functions correctly in the SA mode then proceed to “Step 2: Verify that the DSP IF OUT is functioning correctly.”

### Step 2: Verify that the DSP IF OUT is functioning correctly.

1. Set the ESA Spectrum Analyzer and signal generator to the settings in STEP 1.
2. Observe the DSP IF OUT at connector J5 of the DDRF board with an 8560E series spectrum analyzer or equivalent spectrum analyzer with a Center Frequency of 3.7 MHz and a SPAN of 5 MHz. The output should be similar to Figure 1-7.

**Figure 1-7** **8560E Series Spectrum Analyzer Display**

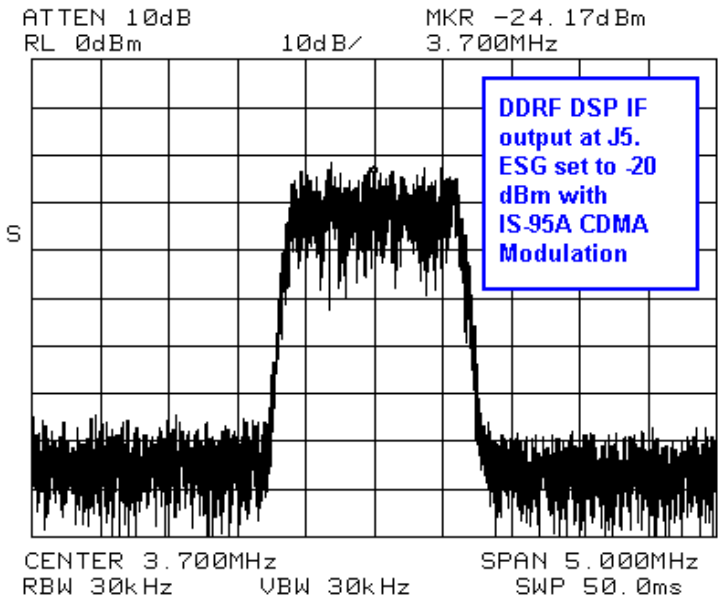


This signal will periodically be displayed on the 8560E series spectrum analyzer when the signal is periodically routed to the DSP board through the DDRF connector J5.

- If this signal is not periodically displayed on the 8560E series spectrum analyzer replace the DDRF board.
- If the signal is periodically present proceed to "Step 3: Verify the Sample Rate Clock".

### Step 3: Verify the Sample Rate Clock

Verify a Clock signal is present at connector J12 of the DDRF board.

- If this signal is not present, replace the DDRF board.
- If both the Sample Rate Clock and DSP IF out signals are present and correct on the DDRF board, replace the DSP board.

**Verifying Operation With the GSM Option BAH Personality**

### Step 1. Functional Check

1. Connect the signal generator RF out to the input of the ESA Spectrum Analyzer and the 10 MHz OUT of the spectrum analyzer to the 10 MHz reference IN on the signal generator.
2. Configure the signal generator by pressing the following keys:

   **MODE**
   **Real Time I/Q BaseBand**
   **TDMA**
   **GSM**
   **GSM Off/On** ON
   **Data Format to Framed**
   **Frequency**, 935.2, and **MHz**
   A**mplitude**, –20, and **dBm**
   **RF On/Off** On

3. Configure the spectrum analyzer by pressing the following keys:

   **MODE**
   **GSM**
   **Frequency** Verify that the ARFCN channel selected is 1 and the Frequency is 935.2 MHz.
   **MEASURE**
   **Phase and Frequency**
   **Meas Setup**
   **Trigger Source**
   **RF Burst** (Wideband).

The ESA display should be very similar to Figure 1-8.

**Figure 1-8** **Phase and Frequency Error Display**

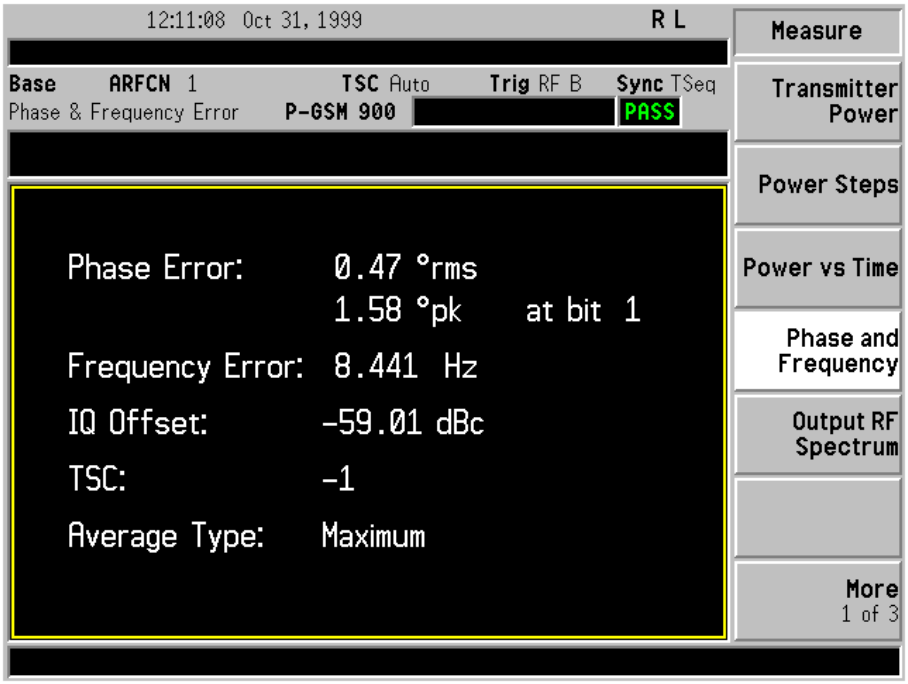


Verify that the Phase Error and Frequency are close to the values displayed in Figure 1-8. If the results are similar to the ones listed above, the digital demodulation hardware is functioning correctly. You can verify the performance using the Performance Verification Test procedure in the calibration guide.

- If a “DSP Failure” error message is displayed or if any LED (DS1 through DS8) on the DSP board are ON replace the digital demod DSP board.
- If the Phase and Frequency Errors are very large this could be indicative of a spectrum analyzer phase noise problem.
- If the measurement does not start or the message “Valid GSM Burst not Found” is displayed, verify that the spectrum analyzer functions correctly in the SA mode.

  If SA mode function is correct, replace the DDRF board and repeat “Step 1. Functional Check”.
- If the results are not close to the values listed in Figure 1-8, verify that the spectrum analyzer functions correctly in the SA mode.

  If SA mode function is correct, replace the DDRF board and repeat “Step 1. Functional Check”.
- If the results are still incorrect, replace the DSP board and repeat “Step 1. Functional Check”.

## Troubleshooting the A7A13 Noise Source Driver Assembly

The A7A13 Noise Source Driver assembly contains the circuitry to control either an SNS Series Noise Source (SNS) or a 346 Series (Norm) Noise Source. This assembly is used exclusively by the Noise Figure Measurement Personality, Option 219. In addition to switching the noise source on and off via a signal which toggles between 0 V (Off) and 28 V (On), it provides the interface to download the ENR data from the SNS Series noise sources.

### Verify +28V PULSED Output Operation

1. Connect a voltmeter to the +28V PULSED output on the analyzer rear panel using a BNC cable and a BNC to dual banana plug adapter.
2. Set the voltmeter to read dc voltages between 0 and 30V.
3. On the analyzer, press **System**, **More**, **More**, **Service**.
4. Press –**2010**, **Enter**.
5. Press **Service**, **More**, **Noise Source** (On).
6. Verify that the voltmeter reads +28V ± 0.1 V.
7. Press **Noise Source** (Off)
8. Verify that the voltmeter reads less than +1 V.
9. If the voltages measured are not as described above, the A7A13 Noise Source Driver assembly is defective.

### Verify SNS Digital Interface Operation

To properly verify the digital interface capability of A7A13, it is necessary to have the Noise Figure Measurement Personality installed and licensed. Also, a known good SNS Series Noise Source (model N4000A, N4001A, or N4002A) and a noise source cable (11730A or 8120-8319) will be needed.

1. Connect the SNS Series Noise Source to the SNS SERIES NOISE SOURCE connector on the rear panel.
2. Enter the Noise Figure Measurement Personality by pressing **MODE**, **Noise Figure**. It will take several seconds for the analyzer to switch to the Noise Figure mode.
3. Press **Meas Setup**, **ENR**, **Common Table** (On).
4. Press **SNS Setup**. Set **Preference** to SNS.
5. Press **Meas Setup**, **ENR**, **Meas & Cal Table**. Press the right Tab key until the yellow highlight appears in the Frequency column.
6. Press **More**, **Delete All**. Press **Delete All** again to confirm the delete process.
7. Verify that the ENR table is empty and the error message “No entries in ENR table” appears in the status line.

8. Press **Fill Table From SNS**.
9. After a few seconds, the ENR table should be filled with the data downloaded from the noise source. Verify that the serial number and model number shown on the screen agree with the serial number and model number of the noise source.
10. If the ENR data is not downloaded, the noise source driver assembly is defective.

# 2 Troubleshooting the RF Section

## What You Will Find in This Chapter

This chapter provides information that is useful when starting to troubleshoot the RF section of the analyzer. It explains how to isolate RF problems and provides procedures for troubleshooting common failures.

Component level information containing material lists, schematics, and component location diagrams, is available separately.

# Verifying the RF Section Performance (E4401B and E4411B)

(9 kHz - 1.5 GHz)

This section provides techniques for isolating amplitude failures along the signal path.

The RF section downconverts the analyzer input signal to the final IF of 21.4 MHz. You can troubleshoot the RF section by injecting a 50 MHz CW signal at –20 dBm to the RF input of the analyzer. The 21.4 MHz downconverted IF signal will be the input level minus the input attenuation. The RF section's frequency response will roll off by about 8 dB at 1.5 GHz. The analyzer first upconverts to a 2.4214 GHz 1st IF and then downconverts to a 21.4 MHz IF. Refer to Figure 2-1 for two examples of downconversion, one with an input frequency of 1 GHz, and one with an input frequency of 50 MHz.

**Figure 2-1** **Example of downconversion**

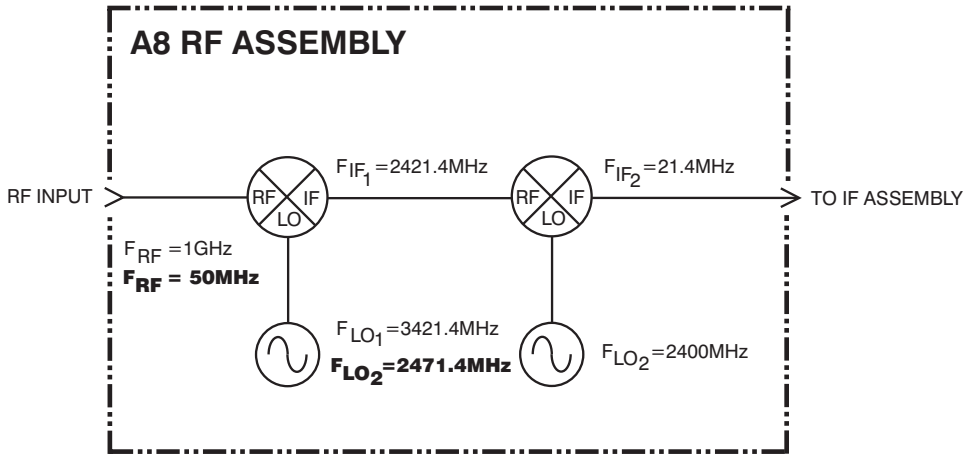


sl759a

## RF Performance Check

1. Inject a CW signal at 50 MHz at –20 dBm for a 50 Ω analyzer and at +28.76 dBmV for a 75 Ω analyzer (Option 1DP) into the RF input of the analyzer.
2. Tune the analyzer to 50 MHz, zero span, with input attenuation set to 0 dB by pressing **FREQUENCY**, **Center Freq**, 50 **MHz**, **SPAN**, **Zero Span**, **Attenuation Auto Man** (Man), 0, **dB**.
3. Turn Auto Align On/Off to Off by pressing **System**, **Alignments**, **Auto Align**, **Off**.

4. Disconnect the flexible gray cable (W2) going into the A3 IF assembly at A3J2.
5. Connect a calibrated spectrum analyzer to this flexible gray cable (W2) and measure the 21.4 MHz output from the RF section.

If the RF section is operating properly, you should measure 21.4 MHz out of the RF section at –20 dBm for a 50 Ω analyzer and +28.76 dBmV for a 75 Ω analyzer on the calibrated spectrum analyzer. See Figure 2-2.

**NOTE** If your signal amplitude is too high or too low, vary the input attenuation from 0 to 60 dB and note that for every 5 dB of attenuator change, the 21.4 MHz IF output signal from the RF section should change 5 dB as well. The signal amplitude problem may be the result of a defective attenuator/switch on the RF section itself.

**Figure 2-2 21.4 MHz Output – A8A1A1**

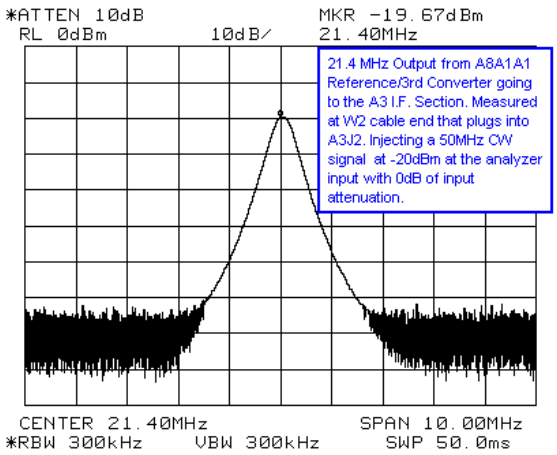


- If you notice a frequency response problem, visually inspect the RF input connector for mechanical integrity.
- If the analyzer has a frequency response problem, you can inject the frequency of interest, tune the analyzer to that frequency in zero span, and monitor the 21.4 MHz IF signal level for abnormalities on your calibrated spectrum analyzer.
- If you have excessive loss through the RF section, replace the RF section.

You can also use the internal 50 MHz calibrator signal for troubleshooting by pressing **Input**, **Amptd Ref On Off** (On). This is a 50 MHz signal at approximately –27 dBm for 50 Ω analyzers or +21.75 dBmV for 75 Ω analyzers that originates from the RF section.

# Verifying the RF Section Performance (E4402B and E4403B)

(9 kHz - 3 GHz)

This section provides techniques for isolating amplitude failures along the signal path.

The RF section downconverts the analyzer input signal to the final IF of 21.4 MHz. You can troubleshoot the RF section by injecting a 50 MHz CW signal at –20 dBm to the RF input of the analyzer. The 21.4 MHz downconverted IF signal will be the input level minus the input attenuation. There are three conversions made in these analyzers. Refer to Figure 2-3 for two examples of downconversion: one with an input frequency of 1 GHz, and one with an input frequency of 50 MHz.

**Figure 2-3 RF Section**

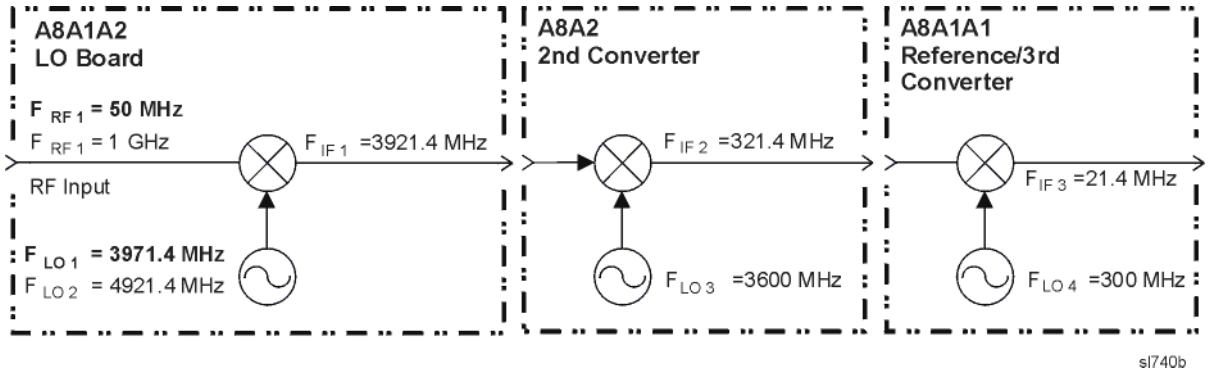


## Quick Check RF Procedure

1. Inject a 50 MHz CW signal at –20 dBm into the RF input of the analyzer.
2. Tune the analyzer to 50 MHz, zero span, with input attenuation set to 0 dB by pressing **FREQUENCY**, **Center Freq**, **50**, **MHz**, **SPAN**, **Zero Span**, **Attenuation Auto Man** (Man), 0, **dB**.
3. Turn Auto Align On/Off to Off by pressing **System**, **Alignments**, **Auto Align**, **Off**.
4. Disconnect the flexible gray cable (W2) going into the A3 IF assembly at A3J2.

5. Connect a calibrated spectrum analyzer to this flexible gray cable (W2) and measure the 21.4 MHz output from the RF section.

   If the RF section is operating properly, you should measure 21.4 MHz out of the RF section at –20 dBm on the calibrated spectrum analyzer. See Figure 2-4.

**Figure 2-4 21.4 MHz RF**

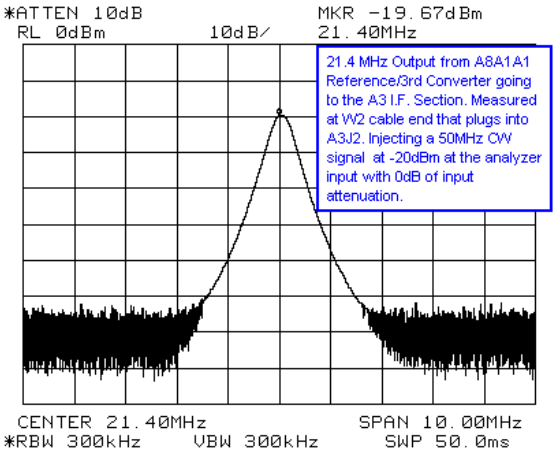


**NOTE** If your signal amplitude is too high or too low, vary the input attenuation from 0 to 65 dB and note that for every 5 dB of attenuator change, the 21.4 MHz IF output signal from the RF section should change 5 dB as well. The signal amplitude problem may be the result of a defective A8A5 input attenuator or the attenuator logic from A8A1A1 Reference/Third Converter.

## Detailed RF Troubleshooting

To isolate the failing assembly, use the analyzer settings as stated in "Quick Check RF Procedure" on page 61, then refer to Table 2-1 on page 63, Figure 2-5, and Figure 2-6 to measure the troubleshooting points throughout the RF section. The Measurement Location column of the table corresponds to the locations called out on the drawing and the block diagram. The Expected Measured Signal column references figures that illustrate the signal expected at that measurement point.

**Table 2-1 RF Section Troubleshooting Points**

| Signal Description | Measurement Location[a] | Expected Frequency | Expected Level | Expected Measured Signal[b] | Notes |
|---|---|---|---|---|---|
| 1st IF Output | A | 3921.4 MHz | –23.2 dBm | Figure 2-7 | A8A1A2 has ~3.2 dB of loss. |
| 2nd IF Output | B | 321.4 MHz | –27.5 dBm | Figure 2-8 | A8A2 has ~4.5 dB of loss. |
| RF Input | C | 50 MHz | –20.5 dBm | Figure 2-9 | |
| 1st LO Output | D | 3971.4 MHz | –1 dBm | Figure 2-10 | Out of A8A1A2 |
| 2nd LO Input | E | 600 MHz | –3 to +6 dBm | Figure 2-11 | Out of A8A1A1 (through A7A9 with Option 120) |
| 2nd LO Multiplied | F Block Diagram only | 3600 MHz | –13.5 dBm | Figure 2-12 | Out of A8A2J5 LO Test Port |
| 600 MHz TG | G | 600 MHz | –7 dBm | Figure 2-13 | Out of A8A1A1 |
| 10 MHz Reference | H | 10 MHz | +5 dBm | Figure 2-14 | Rear Panel 10 MHz Ref. Out |
| 50 MHz Amplitude Reference | I | 50 MHz | –20 dBm | Figure 2-15 | Out of A8A1A1 |

a. To locate the measurement points, refer to Figure 2-5 and Figure 2-6.
b. To see the signal expected at each measurement location, reference the figures in this column.

**Figure 2-5 RF Section Troubleshooting Points**

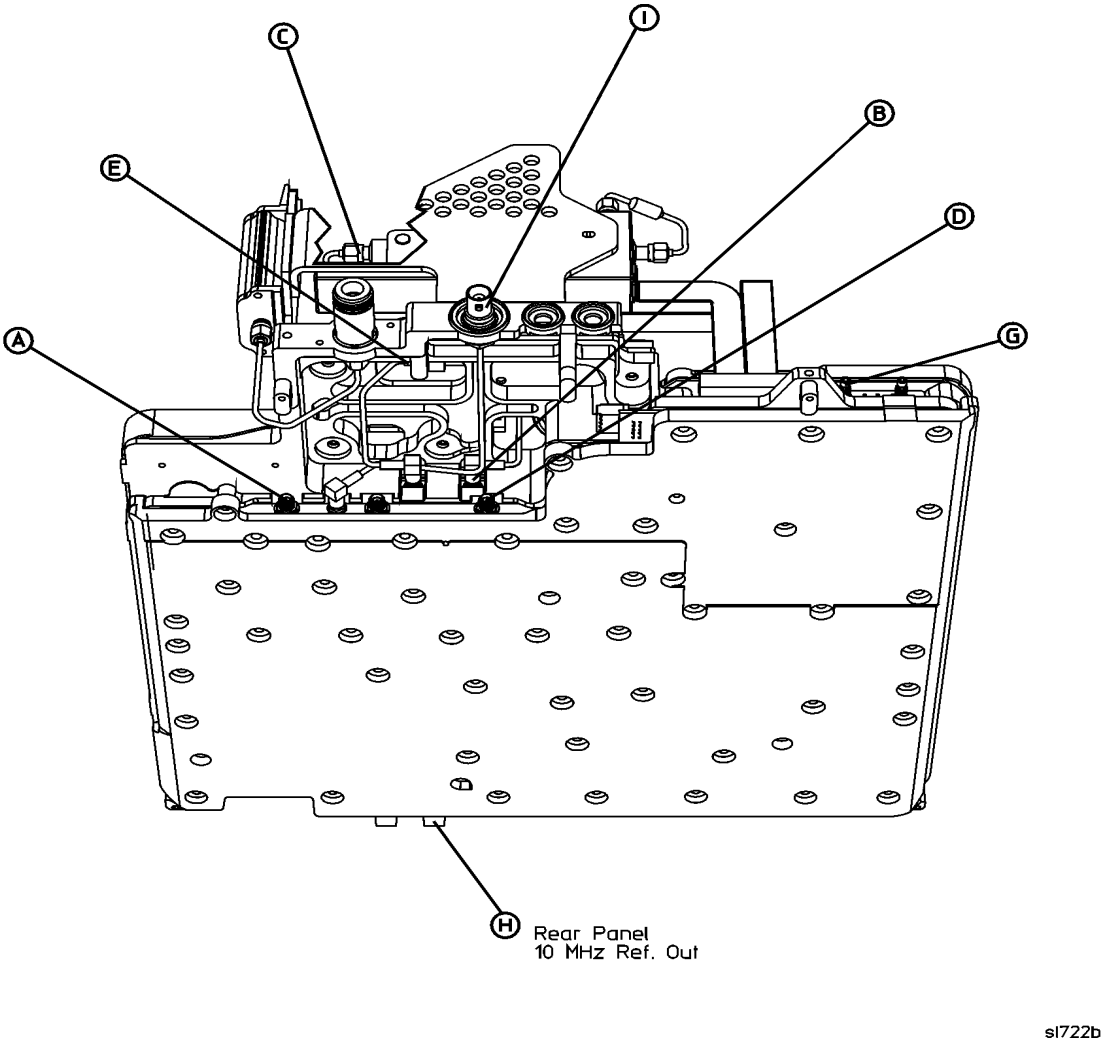

**Figure 2-6 RF Section Block Diagram (E4402B and E4403B)**

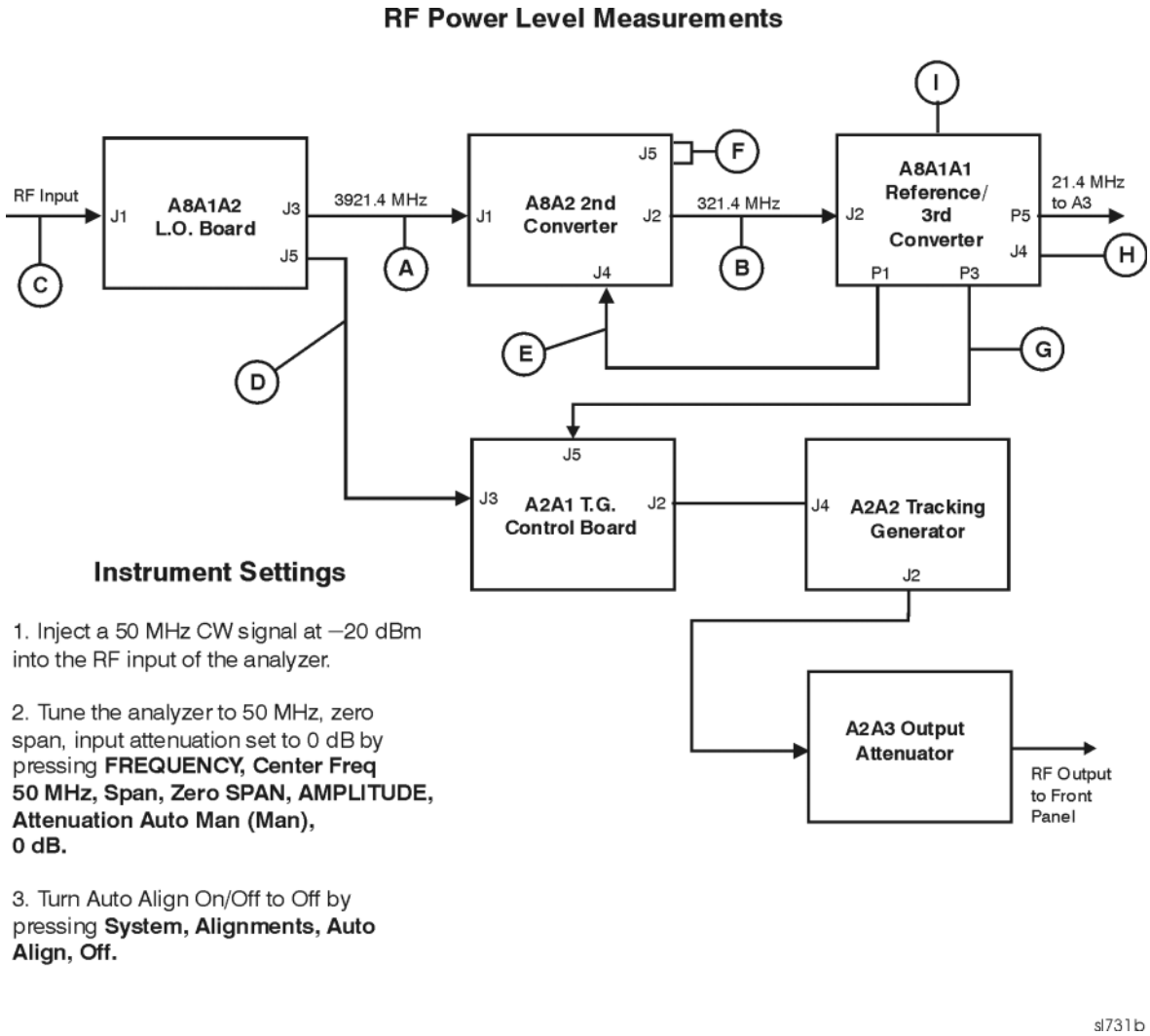

**Figure 2-7** **1st IF Output – A8A1A2J3**

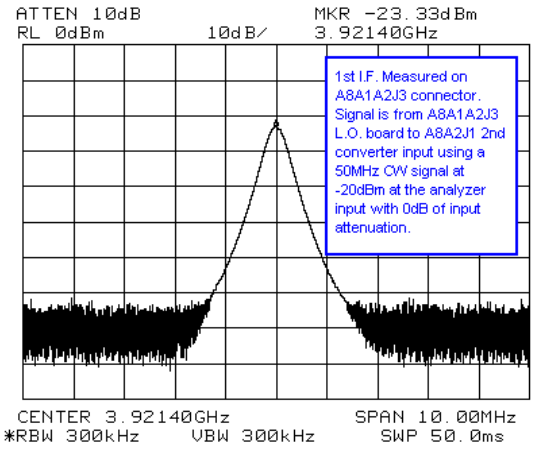


**Figure 2-8** **2nd IF Output – A8A2**

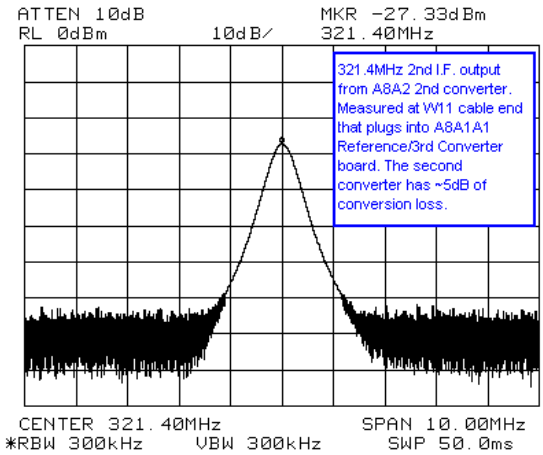

**Figure 2-9 RF Input Measured from A8A3**

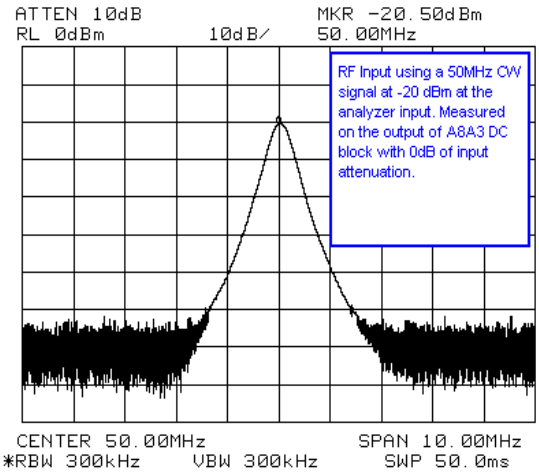


**Figure 2-10 1st LO Output – A8A1A2J5**

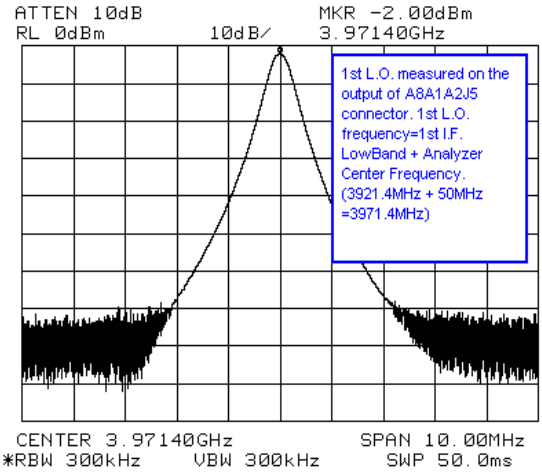

**Figure 2-11 600 MHz 2nd LO – A8A1A1P1**

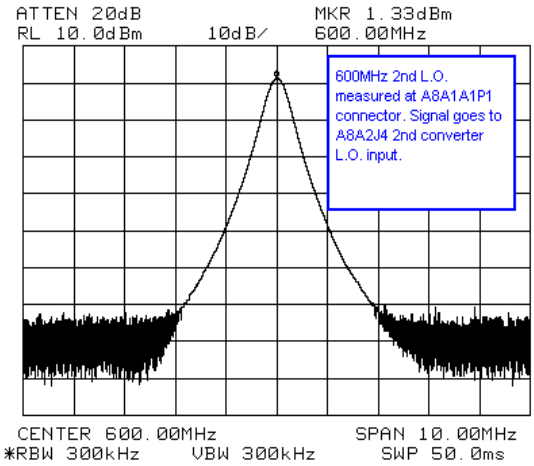


**Figure 2-12 2nd LO Test Port – A8A2J5**

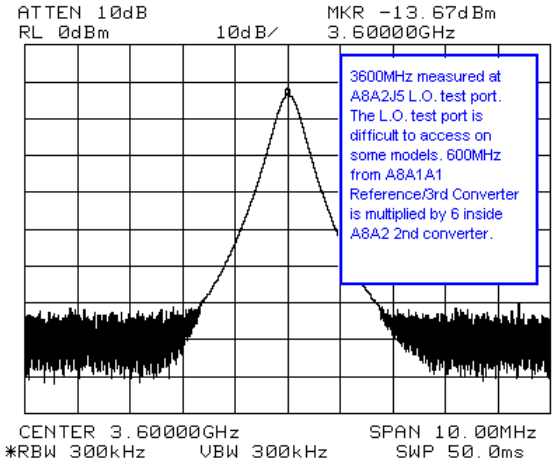

**Figure 2-13** **600 MHz BITG Drive – A8A1A1P3**

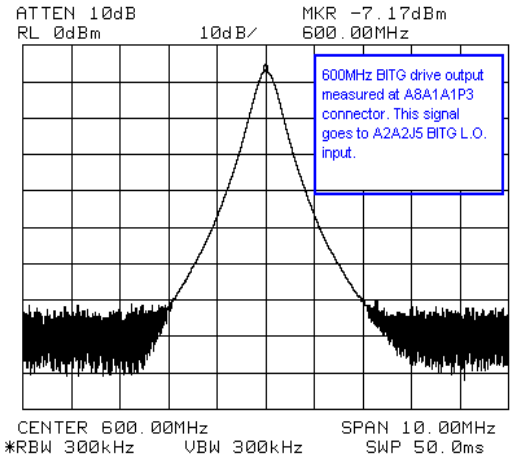


**Figure 2-14** **10 MHz Reference Output**

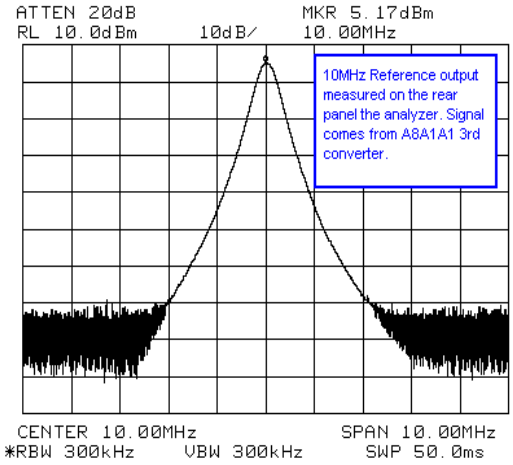

**Figure 2-15 50 MHz Cal Out Signal**

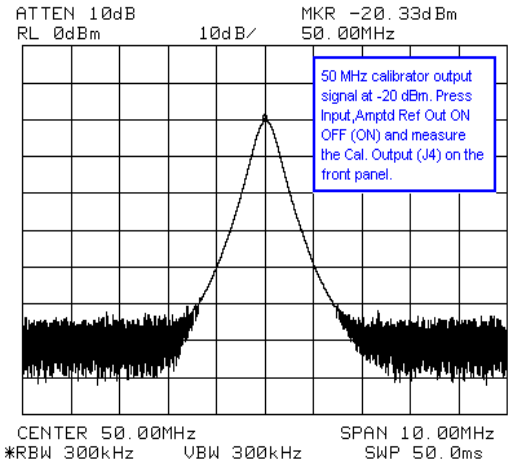

# Verifying the RF Section Performance (E4404B, E4405B, E4407B, and E4408B)

(9 kHz - 6.7 GHz, 13.2 GHz or 26.5 GHz)

The RF section downconverts the analyzer input signal to the final IF of 21.4 MHz. You can troubleshoot the RF section by injecting a 50 MHz CW signal at –20 dBm to the RF input of the analyzer. The 21.4 MHz downconverted IF signal will be the input level minus the input attenuation. There are three conversions made in these analyzers.

## "Quick Check" RF Procedure in Low Band (Non-Preselected)

1. Inject a 50 MHz CW signal at –20 dBm into the RF input of the analyzer.
2. Tune the analyzer to 50 MHz, zero span, with input attenuation set to 0 dB by pressing **FREQUENCY**, **Center Freq**, **50 MHz**, **SPAN**, **Zero Span**, **Attenuation Auto Man** (Man), **0 dB**.
3. Turn Auto Align On/Off to Off by pressing **System**, **Alignments**, **Auto Align**, **Off**.
4. Disconnect the flexible gray cable (W2) going into the A3 IF assembly at A3J2.
5. Connect a calibrated spectrum analyzer to this flexible gray cable (W2) and measure the 21.4 MHz output from the RF section.

If the RF section is operating properly, you should measure 21.4 MHz out of the RF section at –20 dBm. See Figure 2-1 on page 59.

**Figure 2-16** **21.4 MHz Third IF**

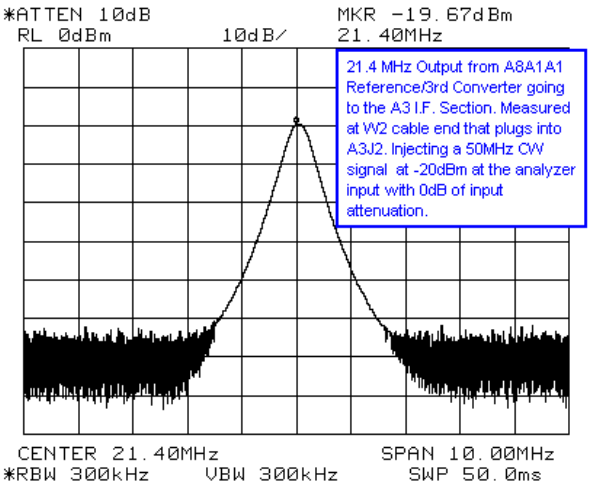

**NOTE** If your signal amplitude is too high or too low, vary the input attenuation from 0 to 65 dB and note that for every 5 dB of attenuator change, the 21.4 MHz IF output signal from the RF section should change 5 dB as well. The signal amplitude problem may be the result of a defective A8A5 input attenuator or the attenuator logic from A8A1A1 Reference/Third Converter.

- If you notice a frequency response problem, visually inspect the RF input connector for mechanical integrity.
- If the analyzer has a frequency response problem you can inject the frequency of interest, tune the analyzer to that frequency in zero span, and monitor the 21.4 MHz IF signal level for abnormalities on your calibrated spectrum analyzer.
- If you have excessive loss through the RF section, see "Detailed RF Troubleshooting for Low Band" on page 73 to isolate the defective assembly.

## Detailed RF Troubleshooting for Low Band

1. Inject a 50 MHz CW signal at −20 dBm into the RF input of the analyzer.
2. Tune the analyzer to 50 MHz, zero span, with input attenuation set to 0 dB by pressing **FREQUENCY**, **Center Freq**, 50 **MHz**, **SPAN**, **Zero Span**, **Attenuation Auto Man** (Man), **0 dB**.
3. Turn Auto Align On/Off to Off by pressing **System**, **Alignments**, **Auto Align**, **Off**.

**NOTE** With an input frequency of 50 MHz, the A8A6 YTF/Mixer (RYTHM) assembly is internally bypassed using switching PIN diodes. The switching logic for the PIN diodes comes from the A7A4 Frequency Extension assembly. The 1st LO from the A8A4 LO Amp/IF Switch assembly is turned off, since the mixer portion of A8A6 is not used in low band (frequencies < 3.0 GHz).

With the analyzer settings stated above, use a calibrated spectrum analyzer to measure the following signals in Table 2-2.

To isolate the failing assembly, refer to Table 2-2 and Figure 2-17 and Figure 2-18 to measure the troubleshooting points throughout the RF section. The Measurement Location column of the table corresponds to the locations called out on the drawing and the block diagram. The Expected Measured Signal column references figures that illustrate the signal expected at that measurement point.

**Table 2-2 RF Section Low Band Troubleshooting Points**

| Signal Description | Measurement Location[a] | Expected Frequency | Expected Level | Expected Measured Signal[b] | Notes |
|---|---|---|---|---|---|
| 1st IF Output | A | 3921.4 MHz | –23.2 dBm | Figure 2-19 | A8A1A2 has ~3.2 dB of loss. |
| 2nd IF Output | B | 321.4 MHz | –27.5 dBm | Figure 2-20 | A8A2 has ~4.5 dB of loss. |
| RF Input | C | 50 MHz | –20.5 dBm | Figure 2-21 | Out of A8A3 |
| 1st LO Output | D | 3971.4 MHz | –1 dBm | Figure 2-22 | Out of A8A1A2 |
| 2nd LO Input | E | 600 MHz | –3 to +6 dBm | Figure 2-23 | Out of A8A1A1 (through A7A9 with Option 120) |
| 2nd LO Multiplied | F Block Diagram only | 3600 MHz | –13.5 dBm | Figure 2-24 | Out of A8A2J5 LO Test Port |
| 600 MHz TG | G | 600 MHz | -7 dBm | Figure 2-25 | Out of A8A1A1 |
| 10 MHz Reference | H | 10 MHz | +5 dBm | Figure 2-26 | Rear Panel 10 MHz Ref. Out |
| 50 MHz Calibrator | I | 50 MHz | –20 dBm | Figure 2-27 | Out of A8A1A1 |

a. To locate the measurement points, refer to Figure 2-17 and Figure 2-18.
b. To see the signal expected at each measurement location, reference the figures in this column.

**Figure 2-17 RF Section Low Band Troubleshooting Points**

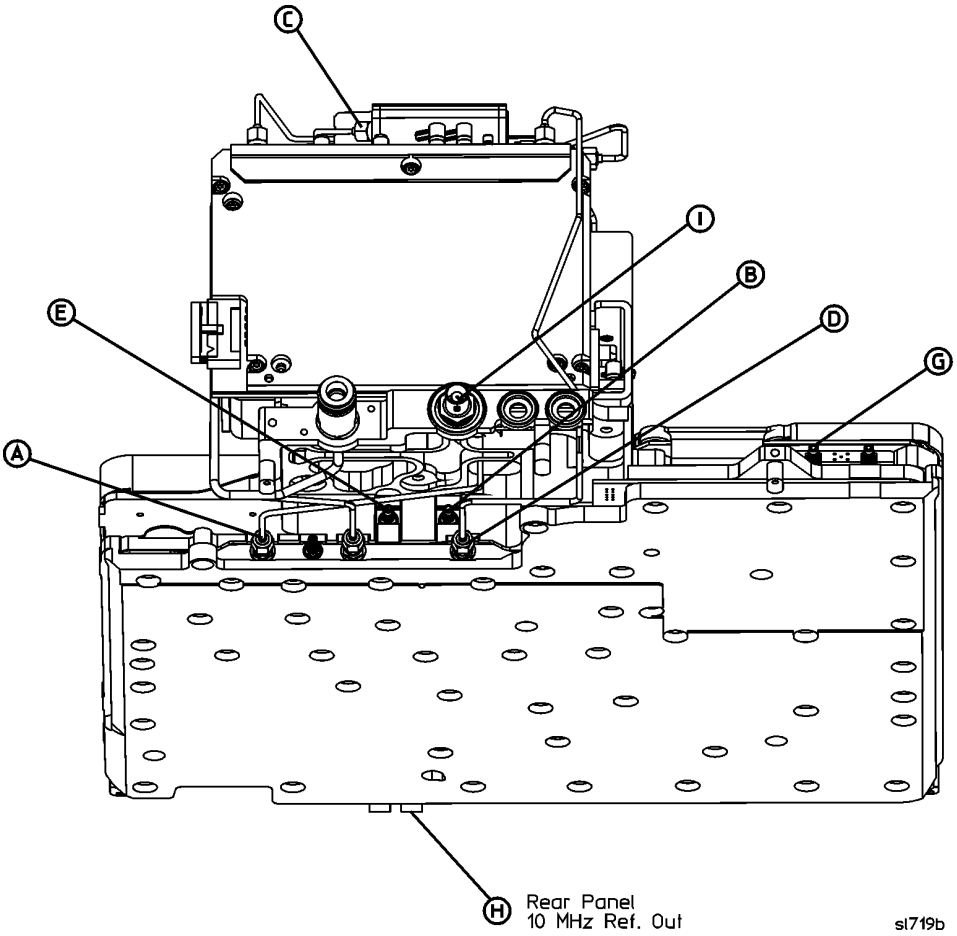

**Figure 2-18 RF Section Low Band Block Diagram E4404B, E4405B, E4407B, and E4408B**

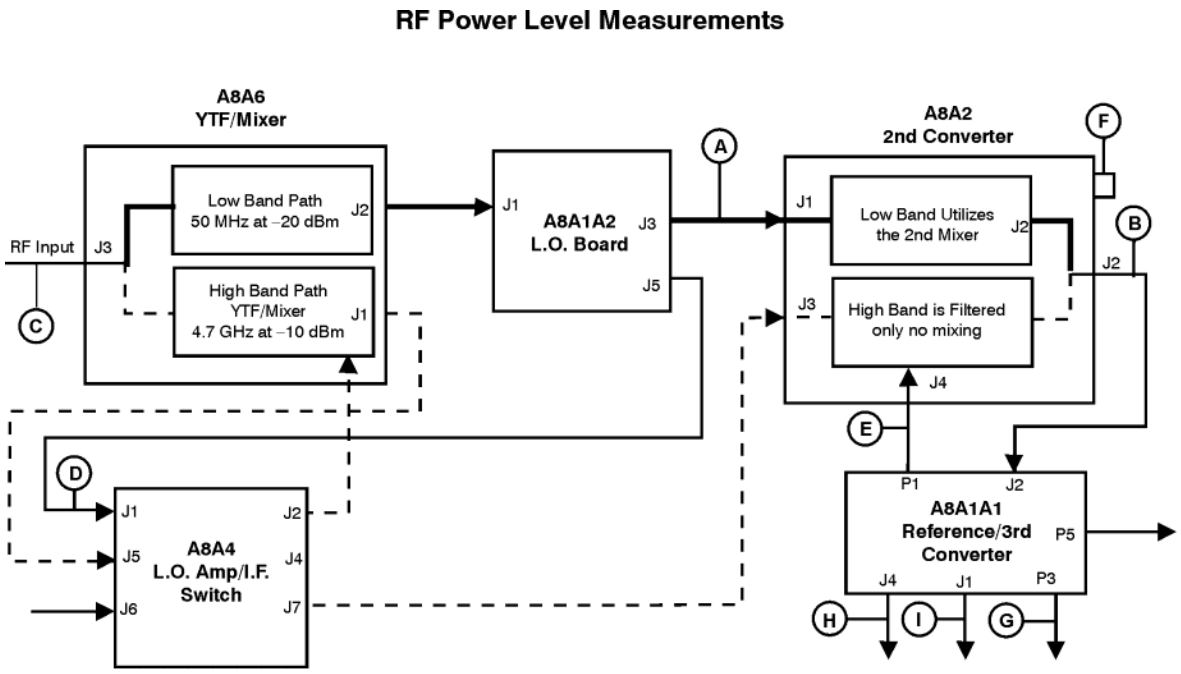


## Instrument Settings

Low Band

1. Inject a 50 MHz CW signal at –20 dBm into the RF input of the analyzer.
2. Tune the analyzer to 50 MHz, zero span, input attenuation set to 0 dB by pressing **FREQUENCY, Center Freq 50 MHz, SPAN, Zero Span, AMPLITUDE, Attenuation Auto Man (Man), 0 dB.**
3. Turn Auto Align On/Off to Off by pressing **System, Alignments, Auto Align, Off.**

High Band

1. Inject a 4.7 GHz CW signal at –10 dBm into the RF Input of the analyzer.
2. Tune the analyzer to 4.7 GHz zero span, input attenuation set to 0 dB by pressing **FREQUENCY, Center Freq 4.7 GHz, SPAN, Zero Span, AMPLITUDE,** Attenuation Auto Man (Man), 0 dB.
3. Turn Auto Align On/Off to Off by pressing **System, Alignments, Auto Align, Off.**

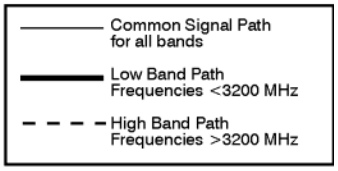


sl732b

**Figure 2-19 1st IF Output – A8A1A2J3**

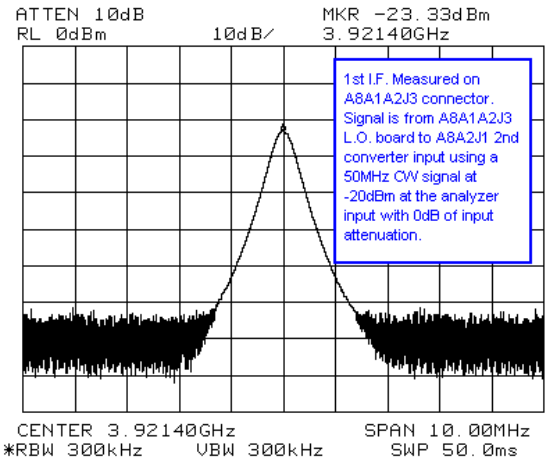


**Figure 2-20 321.4 MHz 2nd IF Output – A8A2**

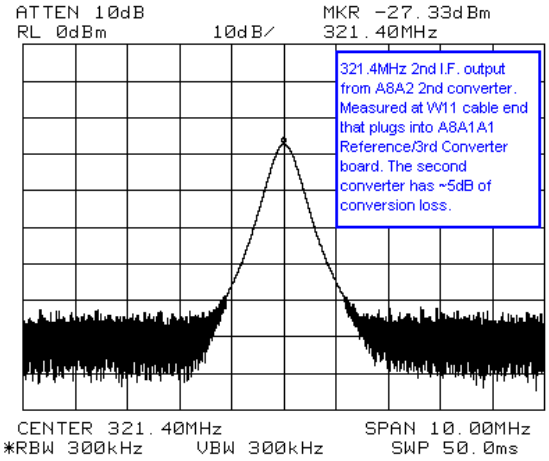

**Figure 2-21 RF Input**

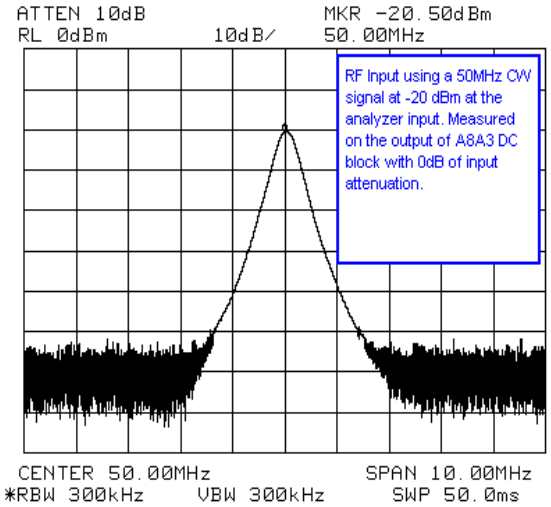


**Figure 2-22 1st LO Output – A8A1A2J5**

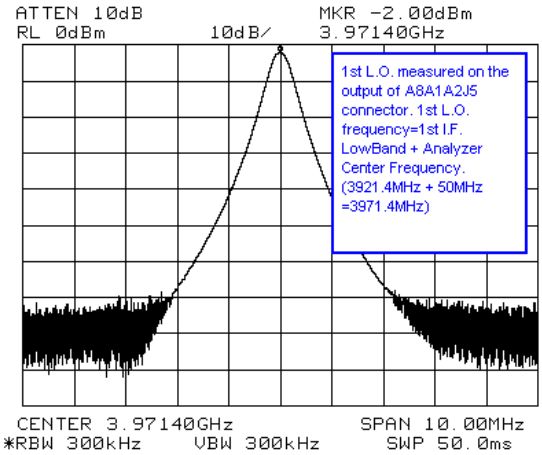

**Figure 2-23** **600 MHz 2nd LO – A8A1A1P1**

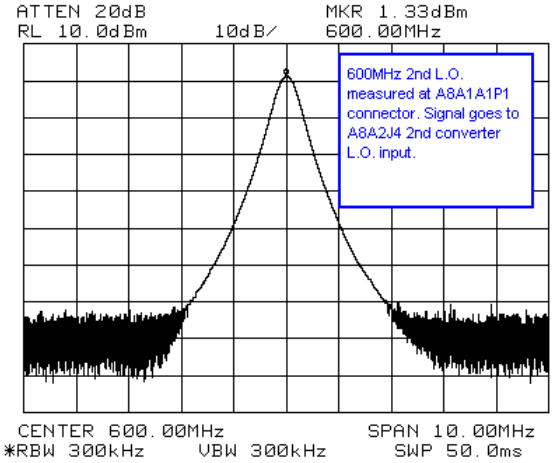


**Figure 2-24** **3600 MHz A8A2J5 LO Test Port**

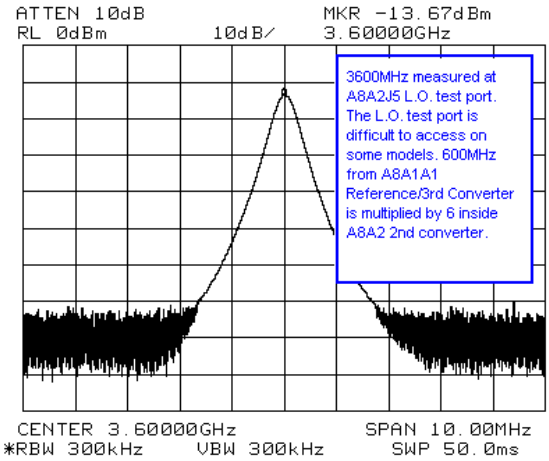

**Figure 2-25** **600 MHz BITG Output – A8A1A1P3**

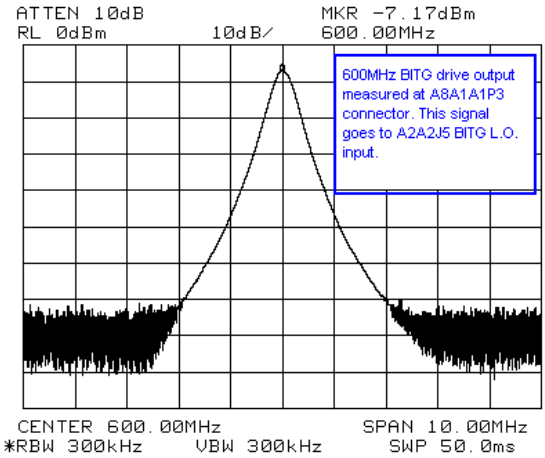


**Figure 2-26** **10 MHz Reference Output – A8A1A1**

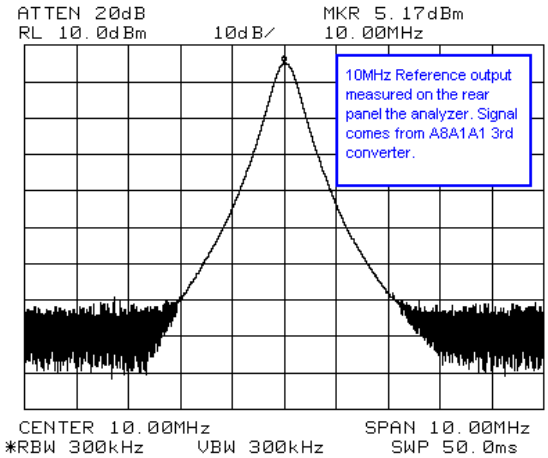

**Figure 2-27 50 MHz Cal Out Signal**

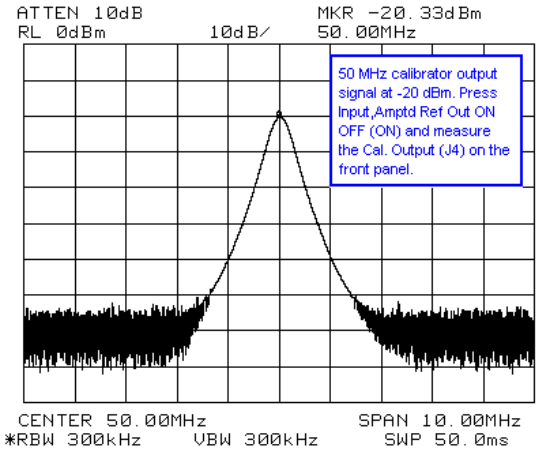


## Quick Check RF Procedure for High Bands (Preselected)

1. Inject a 4.7 GHz CW signal at –10 dBm into the RF input of the analyzer.
2. Tune the analyzer to 4.7 GHz, zero span, input attenuation set to 0 dB by pressing **FREQUENCY**, **Center Freq**, **4.7 GHz**, **SPAN**, **Zero Span**, **Attenuation Auto Man** (Man), **0 dB**.
3. Turn Auto Align On/Off to Off by pressing **System**, **Alignments**, **Auto Align**, **Off**.
4. Disconnect the flexible gray cable (W2) going into the A3 IF assembly at A3J2.
5. Connect a calibrated spectrum analyzer to this flexible gray cable (W2) and measure the 21.4 MHz output from the RF section.
6. If the RF section is operating properly, you should measure 21.4 MHz out of the RF section at –10 dBm. See Figure 2-28.

**Figure 2-28** **21.4 MHz Output - From A8A1A1 to A3**

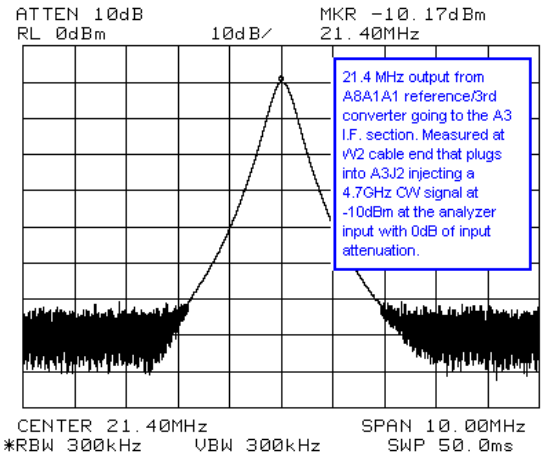


**NOTE** If your signal amplitude is too high or too low, vary the input attenuation from 0 to 65 dB and note that for every 5 dB of attenuator change, the 21.4 MHz IF output signal from the RF section should change 5 dB as well. The signal amplitude problem may be the result of a defective A8A5 input attenuator or the attenuator logic from A8A1A1 Reference/Third Converter.

- If you notice a frequency response problem, visually inspect the RF input connector for mechanical integrity.
- If the analyzer has a frequency response problem you can inject the frequency of interest, tune the analyzer to that frequency in zero span, and monitor the 21.4 MHz IF signal level for abnormalities on your calibrated spectrum analyzer.
- If you have excessive loss through the RF section, see "Detailed RF Troubleshooting for Low Band" on page 73 to isolate the defective assembly.

## Detailed RF Troubleshooting for High Bands (Preselected)

To isolate the failing assembly, refer to Table 2-4 and Figure 2-29 and Figure 2-30 to measure the troubleshooting points throughout the RF section. The Measurement Location column of the table corresponds to the locations called out on the drawing and the block diagram. The Expected Measured Signal column references figures that illustrate the signal expected at that measurement point.

1. Inject a 4.7 GHz CW signal at –10 dBm into the RF input of the analyzer.
2. Tune the analyzer to 4.7 GHz, zero span, input attenuation set to 0 dB by pressing **FREQUENCY**, **Center Freq**, **4.7 GHz**, **SPAN**, **Zero Span**, **Attenuation Auto Man** (Man), **0 dB**.
3. Turn Auto Align On/Off to Off by pressing **System**, **Alignments**, **Auto Align**, **Off**.

With the analyzer settings stated in the above steps, use a calibrated spectrum analyzer to measure the signals in Table 2-4.

**NOTE**

The 1st LO originating from the A8A1A2 LO board is heavily attenuated in the A8A4 LO Amp/ IF switch assembly when the analyzer is tuned to frequencies below ~3200 MHz. During this time the A8A6 YTF/Mixer assembly is internally and electronically bypassed.

However, when the analyzer is tuned higher than ~3200 MHz, the A8A6 YTF/Mixer assembly is used for down conversion and therefore, high LO power is supplied to the A8A6 YTF/Mixer for conversion efficiency. During this time the A8A4 LO Amp/IF switch is amplifying the 1st LO.

The 1st LO modulator drive voltage originates on the A7A4 Frequency Extension board. Before changing the A8A6 YTF/Mixer assembly or the A8A4 LO Amp/IF switch, first verify the switching logic as per Table 2-3.

**Table 2-3 A8A6 YTF/Mixer Switching Logic**

| Measurement Location | Frequencies < 3200 MHz | Frequencies > 3200 MHz |
|---|---|---|
| A7A4J2 pin 9 | 0 V | 5 V |
| A7A4J2 pin 20 | 5 V | 0 V |
| A7A4J2 pin 21 | 0 V | 0 V |

**Table 2-4 RF Section High Band Troubleshooting Points**

| Signal Description | Measurement Location[a] | Expected Frequency | Expected Level | Expected Measured Signal[b] | Notes |
|---|---|---|---|---|---|
| 1st IF Output | A | 321.4 MHz | –22.5 dBm | Figure 2-31 | A8A6 has ~12 dB of loss. |
| 1st IF Output | B | 321.4 MHz | –16 dBm | Figure 2-32 | A8A4 amplifies the 321.4 MHz IF by ~6.5 dB. |
| 1st LO Output | Refer to Figure 2-17 location D | 3971.4 MHz | –2 dBm | Figure 2-33 | Out of A8A1A2 |
| 1st LO Output | D | 3521.4 MHz | +14 dBm | Figure 2-34 | Out of A8A4 in high bands ONLY. LOIS amplifies the input by ~16 dB |
| TG LO Output | E | 3971.4 MHz | –2 dBm | Figure 2-36 | Misc. Signal out of A8A4 used for option 1DN. |
| External 1st LO Output | F | 3971.4 MHz | +12.5 dBm | Figure 2-36 | Output of A8A4. Used for external mixing. |

a. To locate the measurement points, refer to Figure 2-29 and Figure 2-30.
b. To see the signal expected at each measurement location, reference the figures in this column.

**Figure 2-29 RF Section High Band Troubleshooting Points**

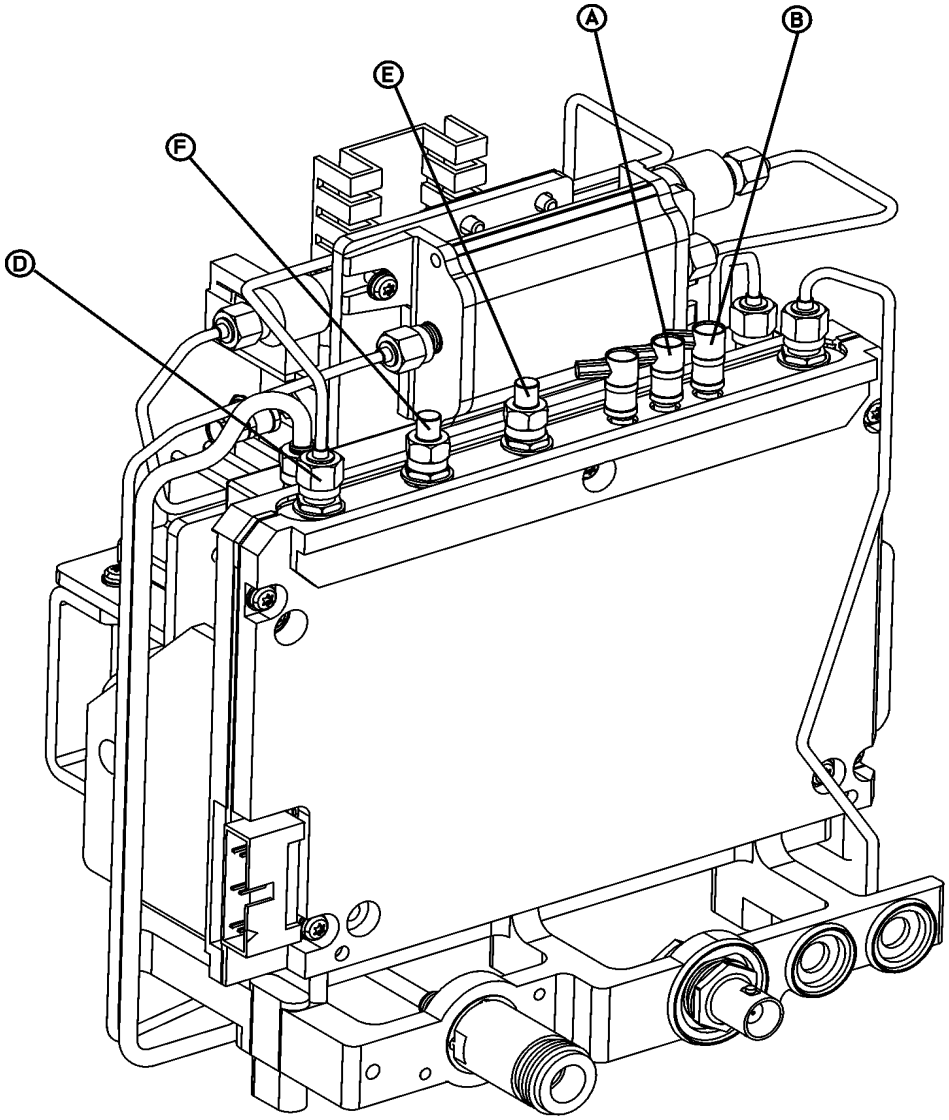


sl726b

**Figure 2-30 RF Section High Band Block Diagram E4404B, E4405B, E4407B, and E4408B**

**RF Power Level Measurements**

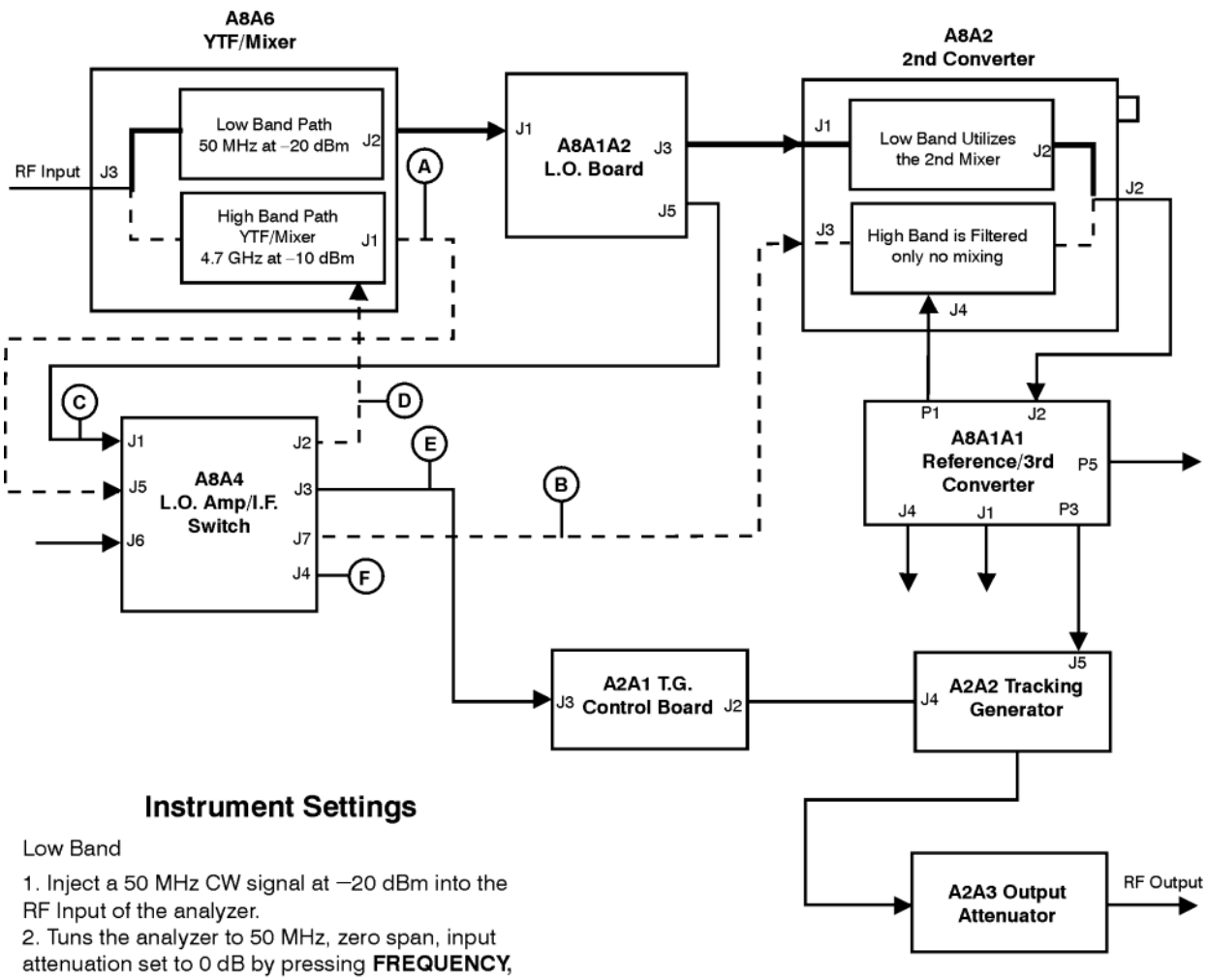


## Instrument Settings

Low Band

1. Inject a 50 MHz CW signal at –20 dBm into the RF Input of the analyzer.
2. Tuns the analyzer to 50 MHz, zero span, input attenuation set to 0 dB by pressing **FREQUENCY, Center Freq 50 MHz, SPAN, Zero Span, AMPLITUDE, Attenuation Auto Man (Man), 0 dB.**
3. Turn Auto Align On/Off to Off by pressing **System, Alignments, Auto Align, Off.**

High Band

1. Inject a 4.7 GHz CW signal at –10 dBm into the RF Input of the analyzer.
2. Tune the analyzer to 4.7 GHz zero span, input attenuation set to 0 dB by pressing **FREQUENCY, Center Freq 4.7 GHz, SPAN, Zero Span, AMPLITUDE,** Attenuation Auto Man (Man), 0 dB.
3. Turn Auto Align On/Off to Off by pressing **System, Alignments, Auto Align, Off.**

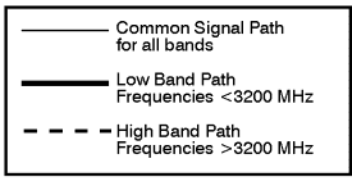


sl733b

**Figure 2-31** **321.4 MHz IF High Band – A8A6J1**

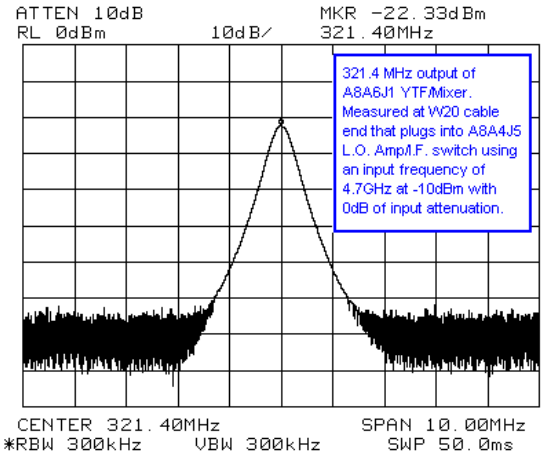


**Figure 2-32** **321.4 MHz Internal IF – A8A4J7**

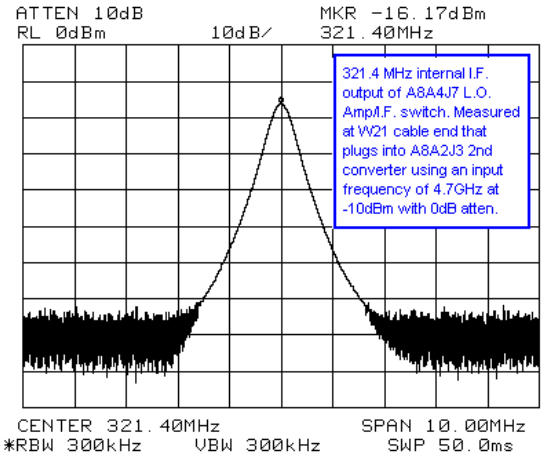

**Figure 2-33** **1st LO – A8A1A2J5**

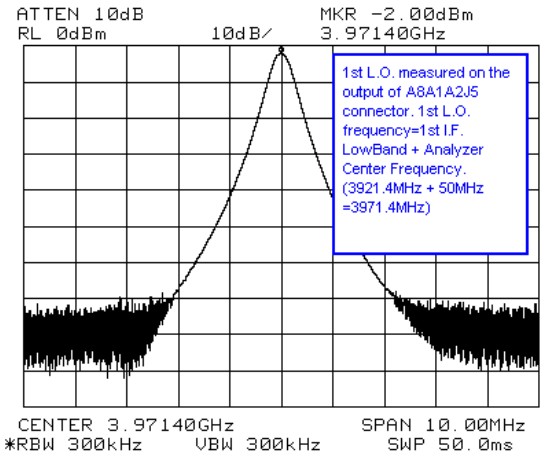


**Figure 2-34** **High Band LO - A8A4J2**

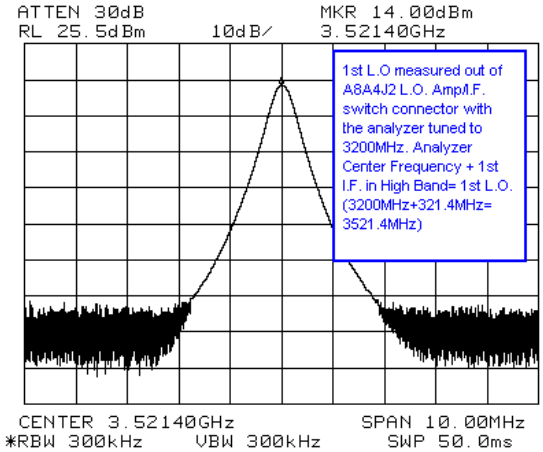

**Figure 2-35 Tracking Generator 1st LO - A8A4J4**

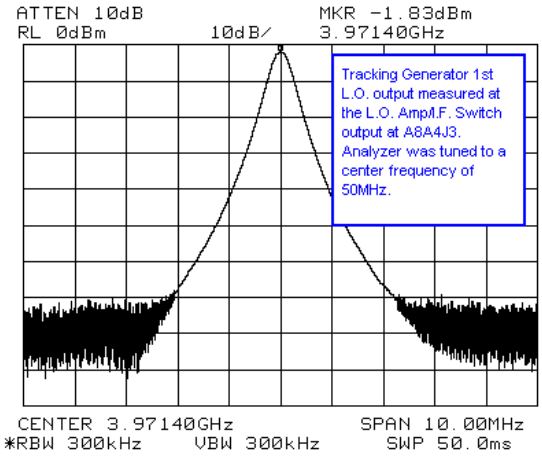


**Figure 2-36 External 1st LO Output - A8A4**

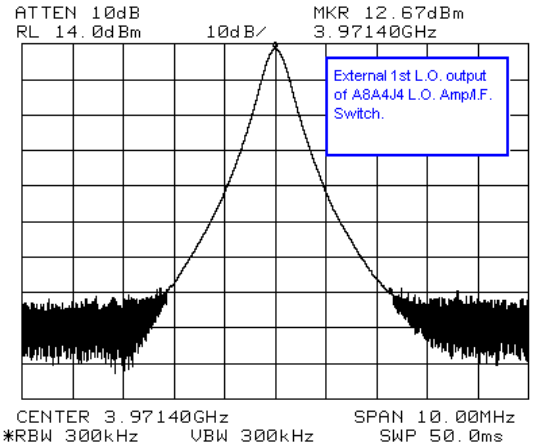

# 3 Block Diagrams

## What You Will Find in This Chapter

This chapter provides information about the operation of the analyzer that is useful when first troubleshooting a failure. Refer to the appropriate overall block diagram at the end of this chapter when reading the assembly descriptions that follow. These figures show all major assemblies in the analyzer.

The ESA series spectrum analyzers are microprocessor-controlled swept receivers with frequency ranges from 9 kHz to 1.5 GHz, 3.0 GHz, 6.5 GHz, 13.2 GHz, or 26.5 GHz, depending on the model number. This chapter briefly describes each of the following analyzer assemblies:

- "A8 1.5 GHz RF Assembly" on page 93
- "A8 RF Assembly" on page 97 which includes:
  - "A8J10 Input Connector" on page 98
  - "A8A1 3.0 GHz RF Assembly" on page 98
  - "A8A1A1 Reference/Third Converter" on page 99
  - "A8A1A2 Front End/LO" on page 99
  - "A8A2 Second Converter" on page 100
  - "A8A3 dc Block" on page 100
  - "A8A4 LO Amplifier/IF Switch (LOIS)" on page 100
  - "A8A5 Input Attenuator" on page 101
  - "A8A6 YIG-Tuned Filter/Mixer (RYTHM)" on page 101
  - "A8FL1 3.1 GHz Low-Pass Filter (LPF)" on page 101
  - "A7A4 Frequency Extension" on page 101
- "A3 IF Assembly" on page 102
- "A4 Processor Assembly" on page 104
- "A5 Power Supply Assembly" on page 108
- "A1 Display/Front Panel" on page 110

All of the board assemblies listed above are connected to the serial digital interface through the motherboard connection. All data and control information and all power supplies, are distributed through these connections. Each of these board assemblies has its own individual EEPROM with stored serial numbers and alignment data for the board.

The assemblies listed below do not have individual EEPROMs and are not connected to the serial digital interface.

- "A7 Motherboard" on page 109
- "A6 Speaker/Floppy Board Assembly" on page 110

# A8 1.5 GHz RF Assembly

(E4401B and E4411B)

The A8 RF assembly performs the following major functions:

- Provides input protection
- Provides input attenuation
- Converts RF input signals to the 21.4 MHz IF
- Generates first and second local oscillator (LO) signals for down-conversion
- Uses a fractional-N phase-locked loop for first LO stability
- Generates a 10 MHz reference signal
- Generates an internal 50 MHz amplitude reference signal and a 21.4 MHz IF alignment signal

The RF section uses a two-stage frequency conversion to convert RF signals to the 21.4 MHz final IF.

## Input Connector

The input connector is mounted directly on the RF assembly. This connector can be easily replaced without disassembling the RF section. Refer to Chapter 6 for the removal procedure.

## Input Protection

**CAUTION** Exposing the analyzer to high levels of input power over a prolonged time period can damage the circuitry.

The analyzer input circuitry can be damaged by power levels that exceed the maximum safe input level specifications. Refer to the analyzer specifications for the exact values.

Some input protection is provided by a dc-blocking capacitor after the input connector. The input relay that switches between input signals and an internal 50 MHz alignment signal also functions as an overload protection switch. The relay is driven by an overload detector that has two power trip points. When the input attenuation is less than 15 dB, the trip point is approximately +13 dBm (68 dBmV with Option 1DP) to protect the mixer. When the input attenuation is 15 dB or greater, the trip point is set to approximately +33 dBm (76 dBmV with Option 1DP) to protect the attenuator.

During an overload condition, the input signal will still be displayed, but at a lower amplitude. This condition is accompanied by a message displayed on screen informing the operator of the overload. Refer to the user's guide for your analyzer for information on how to clear the overload condition.

## Attenuator

The input attenuator provides 0 to 60 dB of attenuation in 5 dB steps. To select 10 dB attenuation, press **Preset**.

## Low-Pass Filter

The input signal passes through a 1.5 GHz low-pass filter (LPF) to eliminate unwanted signals above 1.5 GHz.

## First Mixer

The first mixer converts incoming signals to a 2.4214 GHz first IF by mixing the input signal with a 2.4214 to 3.9214 GHz first local oscillator (LO). This LO is derived by tripling the output from an 800 to 1308 MHz fractional-N phase-locked loop (PLL) synthesizer.

## First IF Amplifier/Filter/Attenuator

The overall gain of the front end is set by the digital-to-analog converter (DAC)-controlled RF variable gain amplifier. The variable gain amplifier has an input LPF, input attenuator, amplifier, output attenuator, and an output LPF. The LPFs provide rejection of harmonics of the LO in order to attenuate unwanted spurious signals. The two attenuators control the approximately 30 dB of available gain. This range is used to provide an overall gain of 0 dB from the RF input to the 21.4 MHz output to the IF assembly.

## Second Mixer

The second mixer converts the 2.4214 GHz first IF to a 21.4 MHz second and final IF, by mixing it with a 2.4 GHz second LO. The second LO is derived by tripling the frequency of an 800 MHz voltage-controlled oscillator (VCO).

## 21.4 MHz Amplifier

The 21.4 MHz amplifier has 3 functions:

- A bandpass filter (BPF) at the input, to reject signals at 10.7 MHz
- An amplifier, with a typical gain of 12 dB
- A PIN switch circuit, to switch between the IF and the 21.4 MHz IF alignment signal that is generated by the first LO

## Frequency Reference

The 10 MHz voltage-controlled crystal oscillator (VCXO) frequency reference is used to phase-lock the 800 to 1308 MHz PLL first LO, and the 800 MHz PLL second LO. It is also used for synchronization with the processor assembly for the analog-to-digital converter (ADC).

An optional oven-controlled crystal oscillator (OCXO) is also available on the E4401B as option 1D5. Option 1D5 adds a small board, A8A1 OCXO, to the basic A8 RF assembly. Cables interconnect A8A1 to A8.

## LO

### First LO

The 2.4214 to 3.9214 GHz first LO signal is derived from an 800 to 1308 MHz PLL synthesized signal that is tripled by a diode tripler/filter.

This first LO multiplier consists of three tripler/filter paths that are selected by PIN diode switches. Each path contains its own tripler/filter and the appropriate signal path is switched-in based on the desired LO frequency. The three paths are identical except for the range of their bandpass filters.

The output of the tripler is bandpass-filtered to remove the harmonics, and then sent to the output switch. It is then amplified with a limiting amplifier, before going to the first LO amplifier to drive the input mixer.

For frequency sweeps that cross over more than one path range, the two adjacent paths are enabled simultaneously during band crossings to produce a “make-before-break” type of switching action. This action is controlled by the system processor to avoid first LO power drop outs.

The first LO generates the 21.4 MHz IF alignment signal by dividing the PLL output by 40 and bandpass filtering the divided-down signal.

### Second LO

The 2.4 GHz second LO signal and the 50 MHz alignment signal are both synthesized from the 800 MHz VCO that is phase-locked to the 10 MHz reference. The 2.4 GHz signal is derived by multiplying the 800 MHz signal with the use of a tripler/filter path similar to the one used to generate the first LO signal. The 50 MHz amplitude reference signal is derived by dividing the 800 MHz signal by 16.

### A8A1 OCXO (Option 1D5)

The A8A1 OCXO (oven-controlled crystal oscillator) provides improved frequency accuracy and stability. A8A1 receives power and control via A8J2. The OCXO output is fed back to A8 via A8J4.

## Interconnections to Other Assemblies

The A8 RF assembly has three external connectors, (two at the rear of the analyzer and one at the front). It also has seven internal connectors, (four on the top of the board, two on the bottom, and one on the bandpass filter (BPF) cavity).

| | |
|---|---|
| A8J10 | RF Input (front external port) |
| A8J12 | EXT REF IN - accepts an external frequency source to provide the 10 MHz, –15 to +10 dBm frequency reference used by the analyzer. (rear external port) |
| A8J3 | 21.4 MHz IF output to the A3 IF Assembly (internal) |
| A8J11 | EXT REF OUT - provides a 10 MHz, 0 dBm minimum, time-based reference signal. (rear external port) |
| A8J5 | First LO VCO test port (internal) |
| A8J6 | Second LO VCO test port (internal) |
| A8J13 | BPF alignment port (internal) |
| A8J4 | OCXO 10 MHz REF INPUT from A8A1 |
| A8J2 | OCXO (A8A1) power and control (Option 1D5) |

### Unused

A8J7 (internal)

## A8 RF Assembly

(E4402B, E4403B, E4404B, E4405B, E4407B, and E4408B)

The A8 RF assembly performs the following major functions:

- Provides input attenuation
- Provides tracking preselection when tuned above 2.85 GHz
- Converts RF input signals to the 21.4 MHz IF
- Generates first, second and third local oscillator (LO) signals for up-conversion and down-conversion
- Uses a fractional-N phase-locked loop for first LO stability
- Generates a 10 MHz reference signal
- Generates a 50 MHz amplitude reference signal, and an internal 21.4 MHz IF alignment signal
- Provides an auxiliary first LO output and a 600 MHz signal to drive the optional 3.0 GHz tracking generator

When tuned below 3.0 GHz, the RF section up-converts the signal to a 3.9214 GHz first IF, and then down-converts it to a 321.4 MHz second IF, and finally to a 21.4 MHz third IF. When tuned above 3.0 GHz, the RF section down-converts the signal directly to the 321.4 MHz second IF and then to the 21.4 MHz third IF.

The RF Section consists of four board assemblies, and three microcircuits. Two of the board assemblies (A8A1A1 and A8A1A2) comprise the A8A1 3.0 GHz RF Assembly. Not all microcircuits and board assemblies are used in every model. Refer to the following table.

| Description | E4402B and E4403B | E4404B and E4405B | E4407B and E4408B |
|---|---|---|---|
| A8A1 3.0 GHz RF Assembly (includes A8A1A1 and A8A1A2) | X | X | X |
| A8A1A1 Reference/Third Converter (part of A8A1 3.0 GHz RF Assembly) | X | X | X |
| A8A1A2 Front End/LO (part of A8A1 3.0 GHz RF Assembly) | X | X | X |
| A8A2 Second Converter | X | X | X |
| A8A3 DC Block | X | X | X |
| A8A4 LO Amplifier/IF Switch (LOIS) | | X | X |
| A8A5 Input Attenuator | X | | X |
| A8A5 Input Attenuator with Switchable dc Block | (Option UKB) only | X | (Option UKB) only |
| A8A6 YIG-Tuned Filter/Mixer (RYTHM) | | X | X |
| A8FL1 3.1 GHz Low-Pass Filter (LPF) | X | X | X |
| A7A4 Frequency Extension | | X | X |

## A8J10 Input Connector

The input connector is mounted to the middle shield of the 3.0 GHz RF assembly. This connector can be easily replaced without disassembling the RF section. Refer to Chapter 6 for the removal procedure.

## A8A1 3.0 GHz RF Assembly

The A8A1 3.0 GHz RF Assembly is comprised of two boards, the A8A1A1 Reference/Third Converter and the A8A1A2 Front End/LO, in the same shield set. The A8J10 input connector and the Amptd Ref Out connector (part of the A8A1W4 50 MHz Amptd Ref Signal), also mount to A8A1. Refer to the following descriptions for "A8A1A1 Reference/Third Converter" and "A8A1A2 Front End/LO."

## A8A1A1 Reference/Third Converter

(Part of the A8A1 3.0 GHz RF Assembly)

The standard frequency reference is a 10 MHz VCXO. Option 1D5 adds on oven-controlled crystal oscillator (OCXO). The frequency reference is used to phase-lock a 100 MHz VCXO. This 100 MHz signal is divided by two to yield the 50 MHz amplitude reference signal, and is tripled to provide the 300 MHz third LO.

The 300 MHz third LO is then doubled to yield a 600 MHz signal which is the reference for the first LO and will be used by the A8A2 Second Converter to generate the 3.6 GHz second LO.

The second IF amplifiers provide approximately 24 dB of gain. There is also a 400 MHz low-pass filter and a 321.4 MHz bandpass filter before the third mixer. The third mixer is an active mixer, which includes an IF amplifier. The third mixer down-converts from 321.4 MHz to 21.4 MHz. A variable gain stage, controlled by a DAC, follows the third mixer. The gain is set to provide −10 dBm output at A8A1A1P5 when a −10 dBm signal is applied to the analyzer input with 0 dB input attenuation.

The third IF amplifier is followed by a switch to allow the 21.4 MHz alignment signal from A8A1A2 to be routed to the A3 IF Assembly for performing automatic IF alignments between sweeps. Either the output of the third amplifier or the 21.4 MHz alignment signal is routed to the A3 IF Assembly.

A8A1A1 also provides power and control signals for the A8A5 Input Attenuator and the A8A2 Second Converter.

## A8A1A2 Front End/LO

(Part of the A8A1 3.0 GHz RF Assembly)

A limiter at the A8A1A2 input protects the first mixer from excessive RF signals. A switch following the limiter allows the 50 MHz amplitude reference signal to be switched-in to perform automatic RF alignments. A preamplifier (available as Option 1DS on E4401B, E4402B, E4404B, E4405B, and E4407B analyzers) can be switched-in just before the first mixer. The first mixer is an active mixer with LO and IF amplifiers. A 700 MHz wide bandpass filter follows the first mixer. The variable gain first IF amplifier corrects for conversion losses in the front end.

The first LO uses a YIG-tuned oscillator in a fractional-N phase-locked loop (PLL). The 600 MHz reference from A8A1A1 is divided by 128 or 129 dual-modulus prescaler and the resulting ~4.66 MHz signal is used as the reference for the fractional-N PLL. The 21.4 MHz alignment signal is generated by dividing the first LO signal by 64 and then limiting the divided signal. The first LO signal drives a series of three directional couplers. The first directional coupler is used to drive an ALC loop to level the first LO signal. The second directional coupler provides feedback for the fractional-N PLL. The last directional coupler provides an auxiliary first LO output for driving either the optional 3.0 GHz tracking generator or the A8A4 LO Amplifier/IF Switch (LOIS), which then provides a first LO signal for the A8A6 YIG-Tuned Filter/Mixer (RYTHM).

## A8A2 Second Converter

The A8A2 Second Converter down-converts the 3.9214 GHz first IF to a 321.4 MHz second IF. In high band, it passes the 321.4 MHz first IF from A8A4 (E4404B, E4405B, E4407B, and E4408B) to the A8A1A1 Reference/Third Converter. The converter generates a 3.6 GHz second LO by multiplying a 600 MHz reference. Bandpass filters remove unwanted harmonics of the 600 MHz driving signal. First IF and second LO signals are filtered by cavity filters, which are not user adjustable.

## A8A3 dc Block

The dc block protects the input circuitry. It begins to roll off below 9 kHz, the low frequency limit of the analyzers. A8A3 is not present in analyzers with Option UKB.

## A8A4 LO Amplifier/IF Switch (LOIS)

(E4404B, E4405B, E4407B, and E4408B)

The A8A4 LO Amplifier/IF Switch (LOIS) amplifies the auxiliary LO output from A8A1A2 and levels the output, as necessary, to provide the optimum first LO amplitudes to the A8A6 YIG-Tuned Filter/Mixer (RYTHM). An output is also provided to drive the A2 3.0 GHz tracking generator (Option 1DN). An additional levelled output is available for External Mixing (Option AYZ).

The IF switch routes the 321.4 MHz IF signal from A8A6 and amplifies it before passing it along to the A8A7 Second Converter. The IF switch also allows for an external 321.4 MHz IF input. A dc bias can be applied to the external IF input signal.

The A8A4 LO Amplifier/IF Switch is controlled by the A7A4 Frequency Extension assembly.

## A8A5 Input Attenuator

The input attenuator provides 0 to 65 dB of attenuation in 5 dB steps. The attenuator in the E4402B, E4404B, E4405B, and E4407B with Option UKB also includes a dc block which can be switched out. With the dc block switched in, the analyzer can make measurements as low as 100 kHz (10 MHz for E4407B with Option UKB). With the dc block switched out, the analyzer can make measurements as low as 9 kHz (100 Hz for Option UKB). Pressing **Preset** selects 10 dB attenuation and, for analyzers with a switchable dc block, switches in the dc block.

## A8A6 YIG-Tuned Filter/Mixer (RYTHM)

(E4404B, E4405B, E4407B, and E4408B)

The A8A6 RYTHM (Routing YIG-Tuned Harmonic Mixer) is a microcircuit which combines an RF switch, a tracking preselector, and a high-band mixer. The PIN diode switch directs the RF input to the appropriate mixer in the A8A6 or the A8A1 3.0 GHz RF assembly.

The tracking preselector is a YIG-tuned filter. It functions as a tunable bandpass filter for high-band signals (2.85 GHz to either 6.5, 13.2, or 26.5 GHz). The preselector's tuned frequency is controlled by DACs on the A7A4 Frequency Extension assembly.

The high-band mixer is ac coupled. It uses the first, second, and fourth harmonics of the first LO to mix with the incoming signals to cover the frequency range.

## A8FL1 3.1 GHz Low-Pass Filter (LPF)

The A8FL1 3.1 GHz LPF precedes the 3.0 GHz RF assembly to eliminate image and out-of-band responses when in low-band. When in low-band, only signals greater than 3.1 GHz can generate image and out-of-band responses. By filtering out these signals, image and out-of-band responses are virtually eliminated.

## A7A4 Frequency Extension

(E4404B, E4405B, E4407B, and E4408B)

The A7A4 Frequency Extension provides power and control signals to the A8A4 LO Amplifier/IF Switch (LOIS) and the A8A6 YIG-Tuned Filter/Mixer (RYTHM). A DAC on A7A4 is used to control the amplitude of LO outputs on the A8A4. A variable-rate generator and sweep clock drive DACs, which control the tuning of the preselector and the A8A6. Several drivers are provided to control the PIN diode switches on A8A4 and A8A6. A DAC also provides bias to the high-band mixer in A8A6.

The flatness correction data for high-band is stored on A7A4.

# A3 IF Assembly

The A3 IF assembly uses combined crystal and LC filters to process 21.4 MHz input signals and create a video output signal.

The IF assembly provides the following main functions:

- Resolution bandwidth filtering
- Step gain amplification
- Log amplification
- Linear detection
- Frequency counter prescaling
- Down-conversion to 8.5 kHz for narrow bandwidths (Option 1DR).

## Cal Attenuator

The Cal Attenuator has 0 to 49 dB of attenuation (in 7 dB steps) to provide gain range for the log amplifier alignment. The attenuator is switched on only as part of IF alignment, not during any normal analyzer sweeps.

## 21.4 MHz Bandpass Filters

The 21.4 MHz IF filters are a series of four pole, synchronously-tuned combined crystal and LC filters with adjustable gain and bypass switches.

Nine IF bandwidths, from 1 kHz to 5 MHz, can be selected in a 1, 3, 10 sequence. There are also 9 kHz and 120 kHz 6 dB bandwidths for EMC measurements.

The resolution bandwidths are normally coupled to the center frequency of the analyzer. Sweep time is also coupled to both resolution bandwidth and span for optimum amplitude response. The resolution bandwidth, sweep time, and span can be set independently.

## Log Detector

The log detector displays the input signal logarithmically due to the successive detection log amplifier that has an overall range of 85 dB.

In log mode, the default vertical amplitude unit is dBm, (dB relative to a milliwatt) rather than volts. (The default vertical amplitude unit is dBmV with Option 1DP.)

## Linear Detector

The input signal can be displayed in linear mode, so that the vertical deflection on the screen is directly proportional to the voltage of the input signal.

## Interconnections to Other Assemblies

A3J2 Unfiltered 21.4 MHz input on SMB cable from the A8 RF assembly at −10 dBm nominal level corresponding to a full scale (top of screen) output video level of 2 V

- Filtered 21.4 MHz output to A7A1 (option A4J) at +10 dBm nominal level corresponding to a full scale (top of screen) input of −10 dBm
- Video output, nominally 0 V at bottom of screen and 2 V at top of screen
- Frequency counter output, differential output 100 mV at 10.7 MHz

## Downconverter

The narrow bandwidths (Res BW ≤ 300 Hz) are implemented digitally using digital signal processing performed by the CPU. The narrow bandwidths are only available in ESA models with Option 1DR.

The downconverter mixes the 21.4 MHz IF signal with the 21.4 MHz (approximately) VCXO signal to yield an 8.5 kHz IF. This 8.5 kHz signal is bandpass-filtered. The 8.5 kHz video signal is digitized by the ADC on the A4 processor assembly.

# A4 Processor Assembly

The A4 processor assembly provides the following main functions:

- Main CPU processing
- Memory, including boot memory and firmware
- Video filtering
- Peak detection
- Analog-to-digital conversion of the video output from A3
- Real-time clock
- IF counters
- Communicates with I/O assemblies
- Front panel interface
- LCD interface
- Digital signal processing for digitally-implemented narrow resolution bandwidths (Option 1DR).

## Analog Section

The analog section of the processor assembly controls all video processing. The analog section includes the input mux, video filter, peak detector, and analog-to-digital conversion circuitry.

### Input Multiplexers

There are two input multiplexers on the processor assembly. MUX A selects which signal passes through the video filters to the peak detectors. MUX B selects which signal is digitized by the analog-to-digital converter.

### Video Filters

There are 10 video filter bandwidths in the video section of the processor assembly. They are simple low-pass RC filters created by switching one of five different capacitors and one of two different resistors into the system. The video filters range from 1 MHz to 30 Hz in a 1, 3, 10 sequence in 10 steps.

### Peak Detectors

There are two peak detectors on the processor assembly. The positive peak detector saves the maximum value reached between measurement buckets. The negative peak detector saves the minimum value reached between measurement buckets.

### Analog-to-Digital Converter (ADC)

The analog-to-digital converter on the processor assembly has a 0 to +2 V range and uses a 12 bit conversion for normal measurements. This results in a vertical resolution of approximately 0.05 dB in log mode and 0.05% of reference level in linear mode.

### Temperature Sensor

The processor assembly has an on-board temperature sensor to give the firmware the ability to determine when the analyzer should be realigned due to temperature changes.

### Audio

There is an audio line on the motherboard that goes to the speaker assembly installed in the analyzer. A signal is sent to the audio line in order for it to be heard through the speaker or headphone jack. The processor has the ability to put two different signals onto the AUDIO line. The first is the AUX_VIDEO line; this is the signal going through the video filters. The second is the CPU_SOUND line, which is currently unused.

### Real-Time Clock

The real-time clock uses a 32 kHz crystal to keep track of the time and date. It has battery backup from the same battery and controller as the SRAM. The real-time clock and the display controller each have their own separate timers.

### IF Count

The processor counts the IF divided by two (10.7 MHz) to determine precisely where the analyzer is tuned. This is used for the frequency counter function.

## Analyzer Battery Information

The analyzers use a single 3 V lithium battery to enable the internal memory to retain data. The date that the battery was installed is displayed on a label on the rear panel of the analyzer. See Figure 3-1.

The minimum life expectancy of the battery is seven years at 25 °C. If you experience problems with the battery, or the recommended time period for battery replacement has elapsed see, “Contacting Agilent Technologies” on page 241.

If you wish to replace the battery yourself, refer to the "A4MAU58 Battery" on page 286 replacement procedure in Chapter 6. The battery is mounted onto the analyzer processor board. If the battery fails or the battery connection is broken, the real-time clock stops and all data stored in RAM is lost. This data will need to be restored after the battery is replaced. The following are examples of the data types that will need to be restored:

- GPIB address (Option A4H) or RS-232 baud rate (Option 1AX)
- Current correction factors (factory correction factors are stored on each assembly)
- Any current limit lines, and correction tables
- Any customized analyzer settings like display contrast, etc.

After replacing the analyzer battery, write the date of battery replacement on the rear panel label.

**Figure 3-1 Rear Panel Battery Information Label**

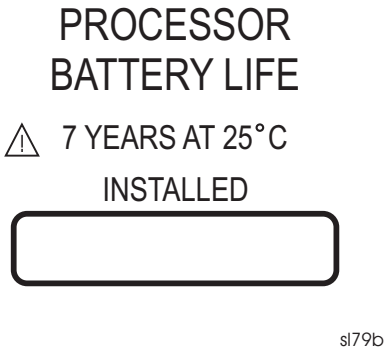


## Interconnections to Other Assemblies

There are four connectors to the rear panel:

| | |
|---|---|
| A4J7 | VGA OUTPUT - drives an external VGA-compatible monitor with a signal that has 31.5 kHz horizontal, 60 Hz vertical synchronizing rate, non-interlaced. |
| A4J1 | (service connector for factory use only) |
| A4J8 | GATE TRIG/EXT TRIG IN (TTL) - accepts the positive edge of an external voltage input that triggers the analyzer internal sweep source. |
| A4J9 | GATE/HI SWP OUT (TTL) - indicates when the analyzer is sweeping. |

The following front panel interface connector contains the signals and voltages for all front panel circuitry:

- Power supplies.
- Rotary pulse generator (RPG) interface. There are two RPGs; one for the active function and one for volume.
- Front panel keyboard interface.
- AT keyboard interface. An AT-style PC keyboard can be plugged into the front panel.
- LCD digital interface. The display controller for the processor assembly can drive an LCD (internal) and a VGA (external) CRT simultaneously.
- Front panel serial interface. This is used to communicate with the front panel of the analyzer.
- Probe power unfiltered supply (+15 V and −15 V supplies). The −15 V supply is converted to −12.6 V on the front panel interface board for the probe power connector.

## A4A1 Flash SIMM

The A4A1 Flash SIMM provides additional memory for firmware enhancements such as downloadable programs. A 4 Mbyte Flash SIMM is standard. Option B72 replaces the 4 Mbyte Flash SIMM with a 32 Mbyte Flash SIMM.

## A4A2 DRAM SIMM

The A4A2 DRAM SIMM provides additional memory for storing traces, states, limitlines, and amplitude correction (“ampcor”) sets. A 16 Mbyte DRAM is standard. Option B72 replaces the 16 Mbyte DRAM with a 32 Mbyte DRAM.

# A5 Power Supply Assembly

The A5 power supply assembly can be powered by a 90 to 140 volt or 200 to 264 volt ac supply, or an external 12 to 22 Vdc supply. It supplies the analyzer with all of the supply voltages listed below. The line module, line fuse, and the dc power connector and dc fuse are all part of the power supply assembly. Refer to the parts list in Chapter 5 for the fuse types.

If the analyzer loses power for more than 30 seconds, the controller may not retain the power-on state (On or Off) selected by the operator. When power is restored, the analyzer will normally be Off. To set the analyzer to automatically turn On when power is applied, set the switch at the rear of the analyzer. This feature is especially useful under the following conditions:

- If the analyzer is in a rack with other analyzers, the entire rack can be turned on with a single switch.
- If the analyzer is operating unattended, you may want to have measurements continue after power is restored.

The fan is mounted directly to the power supply assembly. The fan speed varies with internal analyzer temperature; as the internal temperature increases, the fan speed also increases.

**NOTE** Because of safety concerns, the power supply is not repairable.

## Interconnections to Other Assemblies

The following power supply connections can be made to other assemblies:

- +5 V, +15 V, +28 V, –5 V, and –15 V supplies to the power supply bus
- Voltage for the fan control
- Connector at the rear panel for a dc supply input

## A7 Motherboard

The A7 motherboard provides the power supply and digital bus interconnections between assemblies in the analyzer. Refer to Table 3-1 through Table 3-10 in this chapter for details on the motherboard connectors and mnemonics used.

# Miscellaneous

## A1 Display/Front Panel

### Display

The display is an LCD color flat screen with 640 × 480 VGA resolution. A connector for an external VGA display is available at the rear panel.

### A1A1 Front Panel Interface Board

The A1A1 front panel interface board provides the interface between the display generation circuitry on the processor assembly and the display. It also interfaces the front panel keyboard to the processor assembly. Any display-specific voltages (other than 5 V digital) are created on this board. The front panel interface board also includes the following:

- Main RPG
- Volume RPG
- Plug for external AT style PC keyboard
- Probe power (–12.6 Vdc, +15 Vdc, and ground)
- Circuits to digitally adjust the display

### A1A2A2 Backlight Inverter Board

The backlight supply provides the high voltage to the two backlights in the LCD display.

### A6 Speaker/Floppy Board Assembly

The speaker/floppy board assembly has an internal speaker and a front panel earphone jack which provides the capability to listen to a demodulated signal. The 3.5” floppy drive (A:) and the earphone jack can be accessed by opening the media door. The volume knob on the front panel controls the volume.

# Motherboard Mnemonics and Connectors

**Table 3-1 Motherboard Mnemonics**

| Mnemonic | Description |
|---|---|
| 10 MHZ_AC | This is the 10 MHz reference from the RF section to the A7A1 and processor. It is terminated in 50 Ω by the processor board. Signal: AC coupled 0.5 V peak to peak<br><br>Line Impedance: 50 Ω |
| 10 MHZ_TG | This is the 10 MHz reference from the RF section to the tracking generator. It is terminated in 50 Ω by the tracking generator board. Signal: AC coupled 0.5 V peak to peak<br><br>Line Impedance: 50 Ω |
| ACOM | Analog Common |
| AC_IF | Analog Card IF. An uncorrected, buffered IF signal from the output of the IF assembly.<br>Frequency: 21.4 MHz<br><br>Line Impedance: 50 Ω |
| AC_TRIG | Analog Card Trigger, provides trigger to system for option cards (E4401B, E4402B, E4404B, E4405B, and E4407). |
| ADC_SYNC | A positive-going signal that indicates when the main ADC on the video/processor assembly has started an A/D conversion. |
| ANA_TST | An analog signal from the RF section, tracking generator, or the analog card cage to the ADC of the video processor. When it is selected, the signal bypasses the video filter and peak detector sections.<br><br>Line Impedance: 50 Ω |
| AUDIO | AUDIO line to internal speaker<br><br>Line Impedance: 50 Ω |
| AUX_VIDEO | Auxiliary video: A detected video signal (0–2 V) that has passed through the video filters.<br><br>Line Impedance: 50 Ω |
| CRD_ANLG1 | Card Analog 1 provides input to CPU for option cards (E4401B, E4402B, E4404B, E4405B, and E4407B). |
| CRD_ANLG2 | Card Analog 2 provides input to CPU for option cards (E4401B, E4402B, E4404B, E4405B, and E4407B). |
| CRD_ANLG3/7 | Provides option card interconnection (E4401B, E4402B, E4404B, E4405B, and E4407B). |

**Table 3-1 Motherboard Mnemonics (Continued)**

| Mnemonic | Description |
|---|---|
| DCOM | A common ground for all digital circuitry. |
| DI_FREQ_CNT | Differential Inverted Frequency Count: 10.7 MHz signal from IF to processor to be counted for marker count function |
| DN_FREQ_CNT | Differential Non-Inverted Frequency Count: 10.7 MHz signal from IF to processor to be counted for marker count function |
| HPUP_AC | High = Processor Up Analog Card: This line will go high when power is applied and will go low before the supplies fully shut down. |
| HPUP_SYNC | (not used) |
| HPUP_PS | High = Processor Up Power Supply: This line will go high when power is applied and will go low before the supplies fully shut down. |
| HSWP_AC | High = Sweeping for analog card. A high indicates the analyzer is sweeping. (HC) |
| HSWP_CNTRL | High = Sweep Control: This signal provides control for the analyzer display sweep and retrace. |
| HWR_END_IO | High = Write_End. A signal that indicates the end of cycle for I/O card. (TTL) |
| H_SWEEP | High = Sweep for RF and TG. A high indicates the analyzer is sweeping. (HC) |
| IF_VIDEO | The detected 21.4 MHz IF signal from the detector on the IF assembly to the input multiplexer of the video processor.<br><br>Line Impedance: 50 Ω |
| IO_A(16/0) | I/O Address Lines |
| IO_D(15/0) | I/O Data Lines |
| LADDR | Low = Address, serial bus strobe for address information |
| LAS_IO | Low = Address strobe for I/O card. A TTL low indicates address valid |
| LCNTRL | Low = Control, serial bus strobe for control information |
| LCS_HIGH_IO | Low = Chip select for High I/O |
| LCS_IO | Low = Chip select for I/O card (TTL) |
| LDATA | Low = Data, serial bus strobe for sending data |
| LDS_IO | Low = Data strobe for I/O card (TTL) |
| LDTACK_IO | Low = Data acknowledge for I/O card |
| LINE_TRIG | TTL signal synchronous with AC line |

**Table 3-1 Motherboard Mnemonics (Continued)**

| Mnemonic | Description |
|---|---|
| LI_IO0/4 | Four Dedicated interrupt lines for I/O boards:<br>LI_IO0 is for the Speaker board (J20)<br>LI_IO1 is for Card Slot 1 (J21)<br>LI_IO2 is for Card Slot 2 (J22)<br>LI_IO3 is for Card Slot 3 (J23)<br>LI_IO4 is for Card Slot 3 (J24) |
| LI_IO_SLOW | I/O Card Slow Interrupt |
| LLW_IO | Low = Lower write, strobe for lower 8 bits |
| LOE_IO | Low = output enable, strobe for reading data |
| LRESET_IO | Low = reset IO card (TTL) |
| LSRQ | Low Service Request |
| LUW_IO | Low = Upper write, strobe for upper 8 bits |
| LWAIT_IO | Low = wait_IO card, low extends bus cycle |
| MB_ID3/0 | (not used) |
| MISO | Master In Slave Out serial data |
| MOSI | Master Out Slave In serial data |
| N15 | –15 volts |
| N5 | –5 volts |
| P15 | +15 volts |
| P28 | +28 volts |
| P5 | +5 volts |
| P5C | +5 volts Constant |
| P5D | +5 volts for Digital |
| PS_COM | see PS_ON |
| PS_OFF | (not used) |
| PS_ON | PS_ON line, when connected to PS_COM the analyzer will turn on |
| PS_ID0 | Power supply ID bit |
| SCK | Serial clock |
| WLR_IO | Write Low Read |
| X1 | (not used) |
| X2 | (not used) |

**Table 3-2 Mnemonic Pin Locations**

| Mnemonic | A7 Motherboard Connector | | | | | | | |
|---|---|---|---|---|---|---|---|---|
| | J1 | J2 | J4 | J6 | J7 | J10 through J16[a] | J20 | J21 through J24[b] |
| 10MHZ_AC | | | 40 | | 56 | 52 (J11 to J16) | | |
| 10MHZ_TG | | | 18 | | | 52 (J10 only) | | |
| ACOM | 25-36,75-86 | 6-10, 12-15, 17-19,32-39 | 7, 9, 11, 13-17,19,20, 33-35,37-39 | | 1, 3-7, 9-11,13-15, 17-19,21-23, 25-29,31,33, 35,37, 39-42,50,51, 53-55,57-67, 69-71,73-77, 90-92, 100 | 1-3, 5-7, 9-11,13-15, 17-19,21-232 5-27,29,3133, 40, 48, 51, 53-55, 57-59,61-636 5-67,69-7173 -75,77-7990, 98 | 42, 43, 48-50, 92, 93, 98, 100 | 1, 2, 7, 8, 51, 52, 57, 58 |
| AC_IF | | 34 | | | | 76 | | |
| ADC_SYNC | | | | | 32 | 32 | | |
| ANA_TST | | | 36 | | 12 | 56 | | |
| AUDIO | | | | | 8 | 4 | | |
| AUX_VIDEO | | | | | 72 | 72 | | |
| DCOM | 8-12, 58-62 | | | 3, 5, 7, 9, 11, 13, 15, 17,19-21, 23, 25, 27, 29, 31, 33, 35, 37, 39, 41, 43, 68, 69, 81, 93 | | 49, 99 | 1, 5, 7, 9, 11, 13, 15, 17, 19, 21, 23, 25, 27, 29, 31, 33, 35, 37, 39-41, 66, 78 | 9, 11, 13, 15, 17, 19, 21-23, 25, 27, 29, 31, 33, 35, 37, 39, 41, 43, 45, 46, 50, 72, 73, 85 |
| DI_FREQ_CNT | | 20 | | | 52 | | | |
| DN_FREQ_CNT | | 40 | | | 2 | | | |
| HPUP_AC | | 11 | | | 36 | 34 | | |
| HPUP_PS | 2 | | | 49 | | | | |
| HSWP_AC | | | | | 81 | 81 (J11 to J16) | | |
| HSWP_CNTRL | | | | | 80 | 80 | | |
| HWR_END_IO | | | | 8 | | | 38 | 10 |
| H_SWEEP | | | 8 | | 79 | 81 (J10 only) | | |

**Table 3-2 Mnemonic Pin Locations (Continued)**

| Mnemonic | A7 Motherboard Connector | | | | | | | |
|---|---|---|---|---|---|---|---|---|
| | J1 | J2 | J4 | J6 | J7 | J10 through J16[a] | J20 | J21 through J24[b] |
| IF_VIDEO | | 16 | | | 24 | 24 | | |
| IO_A(0) | | | | 32 | | | 16 | 34 |
| IO_A(1) | | | | 80 | | | 67 | 84 |
| IO_A(2) | | | | 30 | | | 18 | 32 |
| IO_A(3) | | | | 79 | | | 68 | 83 |
| IO_A(4) | | | | 78 | | | 69 | 82 |
| IO_A(5) | | | | 28 | | | 20 | 30 |
| IO_A(6) | | | | 77 | | | 70 | 81 |
| IO_A(7) | | | | 76 | | | 71 | 80 |
| IO_A(8) | | | | 26 | | | 22 | 28 |
| IO_A(9) | | | | 75 | | | 72 | 79 |
| IO_A(10) | | | | 74 | | | 73 | 78 |
| IO_A(11) | | | | 24 | | | 24 | 26 |
| IO_A(12) | | | | 73 | | | 74 | 77 |
| IO_A(13) | | | | 72 | | | 75 | 76 |
| IO_A(14) | | | | 22 | | | 26 | 24 |
| IO_A(15) | | | | 71 | | | 76 | 75 |
| IO_A(16) | | | | 70 | | | 77 | 74 |
| IO_D(0) | | | | 92 | | | 55 | 96 |
| IO_D(1) | | | | 91 | | | 56 | 95 |
| IO_D(2) | | | | 42 | | | 6 | 44 |
| IO_D(3) | | | | 90 | | | 57 | 94 |
| IO_D(4) | | | | 89 | | | 58 | 93 |
| IO_D(5) | | | | 40 | | | 8 | 42 |
| IO_D(6) | | | | 88 | | | 59 | 92 |
| IO_D(7) | | | | 87 | | | 60 | 91 |
| IO_D(8) | | | | 38 | | | 10 | 40 |
| IO_D(9) | | | | 86 | | | 61 | 90 |
| IO_D(10) | | | | 85 | | | 62 | 89 |

**Table 3-2 Mnemonic Pin Locations (Continued)**

| Mnemonic | A7 Motherboard Connector | | | | | | | |
|---|---|---|---|---|---|---|---|---|
| | J1 | J2 | J4 | J6 | J7 | J10 through J16[a] | J20 | J21 through J24[b] |
| IO_D(11) | | | | 36 | | | 12 | 38 |
| IO_D(12) | | | | 84 | | | 63 | 88 |
| IO_D(13) | | | | 83 | | | 64 | 87 |
| IO_D(14) | | | | 34 | | | 14 | 36 |
| IO_D(15) | | | | 82 | | | 65 | 86 |
| LADDR | 95 | 26 | 27 | | 89 | 89 | | |
| LAS_IO | | | | 14 | | | 32 | 16 |
| LCNTRL | 99 | 30 | 31 | | 85 | 85 | | |
| LCS_IO | | | | 10 | | | 36 | 12 |
| LDATA | 97 | 28 | 29 | | 87 | 87 | | |
| LDS_IO | | | | 62 | | | 84 | 66 |
| LDTACK_IO | | | | | | | 87 | 63 |
| LINE_TRIG | 50 | | | | 38 | | | |
| LI_IO0 | | | | 6 | | | 91 | |
| LI_IO1 | | | | 55 | | | | 59 (J21 only) |
| LI_IO2 | | | | 54 | | | | 59 (J22 only) |
| LI_IO3 | | | | 4 | | | | 59 (J23 only) |
| LI_IO4 | | | | 53 | | | | 59 (J24 only) |
| LI_IO_SLOW | | | | 56 | | | 90 | 60 |
| LLW_IO | | | | 63 | | | 83 | 67 |
| LOE_IO | | | | 60 | | | 86 | 64 |
| LRESET_IO | | | | 61 | | | 85 | 65 |
| LSRQ | 49 | | 12 | | 82 | 82 | | |
| LUW_IO | | | | 64 | | | 82 | 68 |
| LWAIT_IO | | | | 58 | | | 88 | 62 |
| MISO | 100 | 31 | 32 | | 84 | 84 | | |
| MOSI | 98 | 29 | 30 | | 86 | 86 | | |

**Table 3-2 Mnemonic Pin Locations (Continued)**

| Mnemonic | A7 Motherboard Connector | | | | | | | |
|---|---|---|---|---|---|---|---|---|
| | J1 | J2 | J4 | J6 | J7 | J10 through J16[a] | J20 | J21 through J24[b] |
| N15 | 39-44<br>89-94 | 5, 25 | 6, 26 | | 43, 44<br>93, 94 | 41, 91 | 47, 97 | 3, 53 |
| N5 | 37-38<br>87-88 | 4, 24 | 5, 25 | | 45, 95 | 42, 92 | 46, 96 | 4, 54 |
| P15 | 17-22<br>67-72 | 2, 22 | 2, 22 | | 47, 48<br>97, 98 | 45, 46<br>95, 96 | 44, 94 | 6, 56 |
| P28 | 23, 24<br>73, 74 | | 1, 21 | | 49, 99 | 47, 97 | | |
| P5 | 13-16<br>63-66 | 3, 23 | 3, 23 | | 46, 96 | 43, 44<br>93, 94 | 45, 95 | 5, 55 |
| P5C | | 1, 21 | 4, 24 | | | | | |
| P5D | 3-7<br>53-57 | | | 44-48<br>94-98 | | 50, 100 | 3, 4<br>53, 54 | 47, 48<br>97, 98 |
| PS_COM | 52 | | | 99 | | | | |
| PS_ON | 1 | | | 50 | | | | |
| PS_ID0 | 45 | | | | | | | |
| SCK | 96 | 27 | 28 | | 88 | 88 | | |
| WLR_IO | | | | 12 | | | 34 | 14 |

a. J13, J14, and J15 are not loaded on ESA-L Series motherboards.
b. J23, J24, J25, and J26 are not loaded on ESA-L Series motherboards.

**Table 3-3** **A7J1 Power Supply Connector**

| Pin | Signal | Pin | Signal |
|---|---|---|---|
| 1 | PS_ON | 51 | PS_OFF |
| 2 | HPUP_PS | 52 | PS_COM |
| 3 | P5D | 53 | P5D |
| 4 | P5D | 54 | P5D |
| 5 | P5D | 55 | P5D |
| 6 | P5D | 56 | P5D |
| 7 | P5D | 57 | P5D |
| 8 | DCOM | 58 | DCOM |
| 9 | DCOM | 59 | DCOM |
| 10 | DCOM | 60 | DCOM |
| 11 | DCOM | 61 | DCOM |
| 12 | DCOM | 62 | DCOM |
| 13 | P5 | 63 | P5 |
| 14 | P5 | 64 | P5 |
| 15 | P5 | 65 | P5 |
| 16 | P5 | 66 | P5 |
| 17 | P15 | 67 | P15 |
| 18 | P15 | 68 | P15 |
| 19 | P15 | 69 | P15 |
| 20 | P15 | 70 | P15 |
| 21 | P15 | 71 | P15 |
| 22 | P15 | 72 | P15 |
| 23 | P28 | 73 | P28 |
| 24 | P28 | 74 | P28 |
| 25 | ACOM | 75 | ACOM |
| 26 | ACOM | 76 | ACOM |
| 27 | ACOM | 77 | ACOM |
| 28 | ACOM | 78 | ACOM |
| 29 | ACOM | 79 | ACOM |

**Table 3-3** **A7J1 Power Supply Connector**

| Pin | Signal | Pin | Signal |
|---|---|---|---|
| 30 | ACOM | 80 | ACOM |
| 31 | ACOM | 81 | ACOM |
| 32 | ACOM | 82 | ACOM |
| 33 | ACOM | 83 | ACOM |
| 34 | ACOM | 84 | ACOM |
| 35 | ACOM | 85 | ACOM |
| 36 | ACOM | 86 | ACOM |
| 37 | N5 | 87 | N5 |
| 38 | N5 | 88 | N5 |
| 39 | N15 | 89 | N15 |
| 40 | N15 | 90 | N15 |
| 41 | N15 | 91 | N15 |
| 42 | N15 | 92 | N15 |
| 43 | N15 | 93 | N15 |
| 44 | N15 | 94 | N15 |
| 45 | PS_ID0 | 95 | LADDR |
| 46 | | 96 | SCK |
| 47 | FAN | 97 | LDATA |
| 48 | FAN_RTN | 98 | MOSI |
| 49 | LSRQ | 99 | LCNTRL |
| 50 | LINE_TRIG | 100 | MISO |

**Table 3-4** **A7J2 IF Assembly Connector**

| Pin | Signal | Pin | Signal |
|---|---|---|---|
| 1 | P5C | 21 | P5C |
| 2 | P15 | 22 | P15 |
| 3 | P5 | 23 | P5 |
| 4 | N5 | 24 | N5 |
| 5 | N15 | 25 | N15 |
| 6 | ACOM | 26 | LADDR |

**Table 3-4** **A7J2 IF Assembly Connector**

| Pin | Signal | Pin | Signal |
|---|---|---|---|
| 7 | ACOM | 27 | SCK |
| 8 | ACOM | 28 | LDATA |
| 9 | ACOM | 29 | MOSI |
| 10 | ACOM | 30 | LCNTRL |
| 11 | HPUP_AC | 31 | MISO |
| 12 | ACOM | 32 | ACOM |
| 13 | ACOM | 33 | ACOM |
| 14 | ACOM | 34 | AC_IF |
| 15 | ACOM | 35 | ACOM |
| 16 | IF_VIDEO | 36 | ACOM |
| 17 | ACOM | 37 | ACOM |
| 18 | ACOM | 38 | ACOM |
| 19 | ACOM | 39 | ACOM |
| 20 | DI_FREQ_CNT | 40 | DN_FREQ_CNT |

**Table 3-5** **A7J4 RF Connector**

| Pin | Signal | Pin | Signal |
|---|---|---|---|
| 1 | P28 | 21 | P28 |
| 2 | P15 | 22 | P15 |
| 3 | P5 | 23 | P5 |
| 4 | P5C | 24 | P5C |
| 5 | N5 | 25 | N5 |
| 6 | N15 | 26 | N15 |
| 7 | ACOM | 27 | LADDR |
| 8 | H_SWEEP | 28 | SCK |
| 9 | ACOM | 29 | LDATA |
| 10 | HPUP_SYNC | 30 | MOSI |
| 11 | ACOM | 31 | LCNTRL |
| 12 | LSRQ | 32 | MISO |
| 13 | ACOM | 33 | ACOM |

**Table 3-5** **A7J4 RF Connector**

| Pin | Signal | Pin | Signal |
|---|---|---|---|
| 14 | ACOM | 34 | ACOM |
| 15 | ACOM | 35 | ACOM |
| 16 | ACOM | 36 | ANA_TST |
| 17 | ACOM | 37 | ACOM |
| 18 | 10MHZ_TG | 38 | ACOM |
| 19 | ACOM | 39 | ACOM |
| 20 | ACOM | 40 | 10MHZ_AC |

**Table 3-6** **A7J6 Processor Digital Connector**

| Pin | Signal | Pin | Signal |
|---|---|---|---|
| 1 | MB_ID0 | 51 | MB_ID1 |
| 2 | MB_ID2 | 52 | MB_ID3 |
| 3 | DCOM | 53 | LI_IO4 |
| 4 | LI_IO3 | 54 | LI_IO2 |
| 5 | DCOM | 55 | LI_IO1 |
| 6 | LI_IO0 | 56 | LI_IO_SLOW |
| 7 | DCOM | 57 | LCS_HIGH_IO |
| 8 | HWR_END_IO | 58 | LWAIT_IO |
| 9 | DCOM | 59 | LDTACK |
| 10 | LCS_IO | 60 | LOE_IO |
| 11 | DCOM | 61 | LRESET_IO |
| 12 | WLR_IO | 62 | LDS_IO |
| 13 | DCOM | 63 | LLW_IO |
| 14 | LAS_IO | 64 | LUW_IO |
| 15 | DCOM | 65 | SIZ0_IO |
| 16 | LEN_DTACK_IO | 66 | SIZ1_IO |
| 17 | DCOM | 67 | X2 |
| 18 | X1 | 68 | DCOM |
| 19 | DCOM | 69 | DCOM |
| 20 | DCOM | 70 | IO_A(16) |
| 21 | DCOM | 71 | IO_A(15) |
| 22 | IO_A(14) | 72 | IO_A(13) |
| 23 | DCOM | 73 | IO_A(12) |
| 24 | IO_A(11) | 74 | IO_A(10) |
| 25 | DCOM | 75 | IO_A(9) |
| 26 | IO_A(8) | 76 | IO_A(7) |
| 27 | DCOM | 77 | IO_A(6) |
| 28 | IO_A(5) | 78 | IO_A(4) |
| 29 | DCOM | 79 | IO_A(3) |

**Table 3-6** **A7J6 Processor Digital Connector**

| Pin | Signal | Pin | Signal |
|---|---|---|---|
| 30 | IO_A(2) | 80 | IO_A(1) |
| 31 | DCOM | 81 | DCOM |
| 32 | IO_A(0) | 82 | IO_D(15) |
| 33 | DCOM | 83 | IO_D(13) |
| 34 | IO_D(14) | 84 | IO_D(12) |
| 35 | DCOM | 85 | IO_D(10) |
| 36 | IO_D(11) | 86 | IO_D(9) |
| 37 | DCOM | 87 | IO_D(7) |
| 38 | IO_D(8) | 88 | IO_D(6) |
| 39 | DCOM | 89 | IO_D(4) |
| 40 | IO_D(5) | 90 | IO_D(3) |
| 41 | DCOM | 91 | IO_D(1) |
| 42 | IO_D(2) | 92 | IO_D(0) |
| 43 | DCOM | 93 | DCOM |
| 44 | P5D | 94 | P5D |
| 45 | P5D | 95 | P5D |
| 46 | P5D | 96 | P5D |
| 47 | P5D | 97 | P5D |
| 48 | P5D | 98 | P5D |
| 49 | HPUP_PS | 99 | PS_COM |
| 50 | PS_ON | 100 | PS_OFF |

**Table 3-7** **A7J7 Processor Analog Connector**

| Pin | Signal | Pin | Signal |
|---|---|---|---|
| 1 | ACOM | 51 | ACOM |
| 2 | DN_FREQ_CNT | 52 | DI_FREQ_CNT |
| 3 | ACOM | 53 | ACOM |
| 4 | ACOM | 54 | ACOM |
| 5 | ACOM | 55 | ACOM |
| 6 | ACOM | 56 | 10MHZ_AC |
| 7 | ACOM | 57 | ACOM |
| 8 | AUDIO | 58 | ACOM |
| 9 | ACOM | 59 | ACOM |
| 10 | ACOM | 60 | ACOM |
| 11 | ACOM | 61 | ACOM |
| 12 | ANA_TST | 62 | ACOM |
| 13 | ACOM | 63 | ACOM |
| 14 | ACOM | 64 | ACOM |
| 15 | ACOM | 65 | ACOM |
| 16 | AUDIO_OUT | 66 | ACOM |
| 17 | ACOM | 67 | ACOM |
| 18 | ACOM | 68 | CRD_ANLG2 |
| 19 | ACOM | 69 | ACOM |
| 20 | CRD_ANLG1 | 70 | ACOM |
| 21 | ACOM | 71 | ACOM |
| 22 | ACOM | 72 | AUX_VIDEO |
| 23 | ACOM | 73 | ACOM |
| 24 | IF_VIDEO | 74 | ACOM |
| 25 | ACOM | 75 | ACOM |
| 26 | ACOM | 76 | ACOM |
| 27 | ACOM | 77 | ACOM |
| 28 | ACOM | 78 | GATE_AC |
| 29 | ACOM | 79 | H_SWEEP |

**Table 3-7** **A7J7 Processor Analog Connector**

| Pin | Signal | Pin | Signal |
|---|---|---|---|
| 30 | AC_TRIG | 80 | HSWP_CNTRL |
| 31 | ACOM | 81 | HSWP_AC |
| 32 | ADC_SYNC | 82 | LSRQ |
| 33 | ACOM | 83 | NC |
| 34 | HPUP_SYNC | 84 | MISO |
| 35 | ACOM | 85 | LCNTRL |
| 36 | HPUP_AC | 86 | MOSI |
| 37 | ACOM | 87 | LDATA |
| 38 | LINE_TRIG | 88 | SCK |
| 39 | ACOM | 89 | LADDR |
| 40 | ACOM | 90 | ACOM |
| 41 | ACOM | 91 | ACOM |
| 42 | ACOM | 92 | ACOM |
| 43 | N15 | 93 | N15 |
| 44 | N15 | 94 | N15 |
| 45 | N5 | 95 | N5 |
| 46 | P5 | 96 | P5 |
| 47 | P15 | 97 | P15 |
| 48 | P15 | 98 | P15 |
| 49 | P28 | 99 | P28 |
| 50 | ACOM | 100 | ACOM |

**Table 3-8** **A7J10 through A7J16 Analog Card/ J10 Tracking Generator Connector**

| Pin | Signal | Pin | Signal |
|---|---|---|---|
| 1 | ACOM | 51 | ACOM |
| 2 | ACOM | 52 | 10MHz_AC/10MHz_TG |
| 3 | ACOM | 53 | ACOM |
| 4 | AUDIO | 54 | ACOM |
| 5 | ACOM | 55 | ACOM |
| 6 | ACOM | 56 | ANA_TST |
| 7 | ACOM | 57 | ACOM |
| 8 | CRD_ANLG7 | 58 | ACOM |
| 9 | ACOM | 59 | ACOM |
| 10 | ACOM | 60 | CRD_ANLG6 |
| 11 | ACOM | 61 | ACOM |
| 12 | CRD_ANLG5 | 62 | ACOM |
| 13 | ACOM | 63 | ACOM |
| 14 | ACOM | 64 | CRD_ANLG4 |
| 15 | ACOM | 65 | ACOM |
| 16 | CRD_ANLG3 | 66 | ACOM |
| 17 | ACOM | 67 | ACOM |
| 18 | ACOM | 68 | CRD_ANLG2 |
| 19 | ACOM | 69 | ACOM |
| 20 | CRD_ANLG1 | 70 | ACOM |
| 21 | ACOM | 71 | ACOM |
| 22 | ACOM | 72 | AUX_VIDEO |
| 23 | ACOM | 73 | ACOM |
| 24 | IF_VIDEO | 74 | ACOM |
| 25 | ACOM | 75 | ACOM |
| 26 | ACOM | 76 | AC_IF |
| 27 | ACOM | 77 | ACOM |
| 28 | GATE_AC | 78 | ACOM |
| 29 | ACOM | 79 | ACOM |

**Table 3-8** **A7J10 through A7J16 Analog Card/ J10 Tracking Generator Connector**

| Pin | Signal | Pin | Signal |
|---|---|---|---|
| 30 | AC_TRIG | 80 | HSWP_CNTRL |
| 31 | ACOM | 81 | HSWP_AC/H_SWEEP |
| 32 | ADC_SYNC | 82 | LSRQ |
| 33 | ACOM | 83 | HPUP_SYNC |
| 34 | HPUP_AC | 84 | MISO |
| 35 | AC_ID0 | 85 | LCNTRL |
| 36 | AC_ID1 | 86 | MOSI |
| 37 | AC_ID2 | 87 | LDATA |
| 38 | AC_ID3 | 88 | SCK |
| 39 | AC_ID4 | 89 | LADDR |
| 40 | ACOM | 90 | ACOM |
| 41 | N15 | 91 | N15 |
| 42 | N5 | 92 | N5 |
| 43 | P5 | 93 | P5 |
| 44 | P5 | 94 | P5 |
| 45 | P15 | 95 | P15 |
| 46 | P15 | 96 | P15 |
| 47 | P28 | 97 | P28 |
| 48 | ACOM | 98 | ACOM |
| 49 | DCOM | 99 | DCOM |
| 50 | P5D | 100 | P5D |

**Table 3-9** **A7J20 Speaker Board Connector**

| Pin | Signal | Pin | Signal |
|---|---|---|---|
| 1 | DCOM | 51 | IO_ID0 |
| 2 | IO_ID1 | 52 | IO_ID2 |
| 3 | P5D | 53 | P5D |
| 4 | P5D | 54 | P5D |
| 5 | DCOM | 55 | IO_D(0) |
| 6 | IO_D(2) | 56 | IO_D(1) |
| 7 | DCOM | 57 | IO_D(3) |
| 8 | IO_D(5) | 58 | IO_D(4) |
| 9 | DCOM | 59 | IO_D(6) |
| 10 | IO_D(8) | 60 | IO_D(7) |
| 11 | DCOM | 61 | IO_D(9) |
| 12 | IO_D(11) | 62 | IO_D(10) |
| 13 | DCOM | 63 | IO_D(12) |
| 14 | IO_D(14) | 64 | IO_D(13) |
| 15 | DCOM | 65 | IO_D(15) |
| 16 | IO_A(0) | 66 | DCOM |
| 17 | DCOM | 67 | IO_A(1) |
| 18 | IO_A(2) | 68 | IO_A(3) |
| 19 | DCOM | 69 | IO_A(4) |
| 20 | IO_A(5) | 70 | IO_A(6) |
| 21 | DCOM | 71 | IO_A(7) |
| 22 | IO_A(8) | 72 | IO_A(9) |
| 23 | DCOM | 73 | IO_A(10) |
| 24 | IO_A(11) | 74 | IO_A(12) |
| 25 | DCOM | 75 | IO_A(13) |
| 26 | IO_A(14) | 76 | IO_A(15) |
| 27 | DCOM | 77 | IO_A(16) |
| 28 | X1 | 78 | DCOM |
| 29 | DCOM | 79 | X2 |

**Table 3-9** **A7J20 Speaker Board Connector**

| Pin | Signal | Pin | Signal |
|---|---|---|---|
| 30 | LEN_DTACK_IO | 80 | SIZ1_IO |
| 31 | DCOM | 81 | SIZ0_IO |
| 32 | LAS_IO | 82 | LUW_IO |
| 33 | DCOM | 83 | LLW_IO |
| 34 | WLR_IO | 84 | LDS_IO |
| 35 | DCOM | 85 | LRESET_IO |
| 36 | LCS_IO | 86 | LOE_IO |
| 37 | DCOM | 87 | LDTACK_IO |
| 38 | HWR_END_IO | 88 | LWAIT_IO |
| 39 | DCOM | 89 | LCS_HIGH_IO |
| 40 | DCOM | 90 | LI_IO_SLOW |
| 41 | DCOM | 91 | LI_IO0 |
| 42 | ACOM | 92 | ACOM |
| 43 | ACOM | 93 | ACOM |
| 44 | P15 | 94 | P15 |
| 45 | P5 | 95 | P5 |
| 46 | N5 | 96 | N5 |
| 47 | N15 | 97 | N15 |
| 48 | ACOM | 98 | ACOM |
| 49 | ACOM | 99 | AUDIO_OUT |
| 50 | ACOM | 100 | ACOM |

**Table 3-10** **A7J21 and A7J24 I/O Assembly Connector**

| Pin | Signal | Pin | Signal |
|---|---|---|---|
| 1 | ACOM | 51 | ACOM |
| 2 | ACOM | 52 | ACOM |
| 3 | N15 | 53 | N15 |
| 4 | N5 | 54 | N5 |
| 5 | P5 | 55 | P5 |
| 6 | P15 | 56 | P15 |
| 7 | ACOM | 57 | ACOM |
| 8 | ACOM | 58 | ACOM |
| 9 | DCOM | 59 | LI_IO1/2/3/4 |
| 10 | HWR_END_IO | 60 | LI_IO_SLOW |
| 11 | DCOM | 61 | LCS_HIGH_IO |
| 12 | LCS_IO | 62 | LWAIT_IO |
| 13 | DCOM | 63 | LDTACK_IO |
| 14 | WLR_IO | 64 | LOE_IO |
| 15 | DCOM | 65 | LRESET_IO |
| 16 | LAS_IO | 66 | LDS_IO |
| 17 | DCOM | 67 | LLW_IO |
| 18 | LEN_DTACK_IO | 68 | LUW_IO |
| 19 | DCOM | 69 | SIZ0_IO |
| 20 | X1 | 70 | SIZ1_IO |
| 21 | DCOM | 71 | X2 |
| 22 | DCOM | 72 | DCOM |
| 23 | DCOM | 73 | DCOM |
| 24 | IO_A(14) | 74 | IO_A(16) |
| 25 | DCOM | 75 | IO_A(15) |
| 26 | IO_A(11) | 76 | IO_A(13) |
| 27 | DCOM | 77 | IO_A(12) |
| 28 | IO_A(8) | 78 | IO_A(10) |
| 29 | DCOM | 79 | IO_A(9) |

**Table 3-10 A7J21 and A7J24 I/O Assembly Connector**

| Pin | Signal | Pin | Signal |
|---|---|---|---|
| 30 | IO_A(5) | 80 | IO_A(7) |
| 31 | DCOM | 81 | IO_A(6) |
| 32 | IO_A(2) | 82 | IO_A(4) |
| 33 | DCOM | 83 | IO_A(3) |
| 34 | IO_A(0) | 84 | IO_A(1) |
| 35 | DCOM | 85 | DCOM |
| 36 | IO_D(14) | 86 | IO_D(15) |
| 37 | DCOM | 87 | IO_D(13) |
| 38 | IO_D(11) | 88 | IO_D(12) |
| 39 | DCOM | 89 | IO_D(10) |
| 40 | IO_D(8) | 90 | IO_D(9) |
| 41 | DCOM | 91 | IO_D(7) |
| 42 | IO_D(5) | 92 | IO_D(6) |
| 43 | DCOM | 93 | IO_D(4) |
| 44 | IO_D(2) | 94 | IO_D(3) |
| 45 | DCOM | 95 | IO_D(1) |
| 46 | DCOM | 96 | IO_D(0) |
| 47 | P5D | 97 | P5D |
| 48 | P5D | 98 | P5D |
| 49 | IO_ID1 | 99 | IO_ID2 |
| 50 | DCOM | 100 | IO_ID0 |

## Graphic Symbols Used On Block Diagrams

Bus Line

Indicates a plug-in connection (F) to (M)

Connection symbol indicating plug (movable)

Connection symbol indicating jack (movable)

Heavy line indicates path and direction of main signal

Color code for cable

Variable Gain Amplifier

Amplifier Buffer

Inverter Buffer

Limiter

Variable Integrator

Op Amplifier

Summer

Phase Frequency Detector

Mixer

Oscillator or Generator

Capacitor

Resistor

Variable Resistor

Switch Open

Diode

Analog Digital Convertor

Digital Analog Convertor

Band Pass Filter

High Pass Filter

Low Pass Filter

Band Reject Filter

Common Return

Numbered Test Point. Measurement aid provided.

Lettered Test Point. No Measurement aid provided.

Slide, Toggle, or Rocker, Switch

Grounded Coaxial Sheilding

Directional Coupler

formt123

# ESA-E SERIES BLOCK DIAGRAM

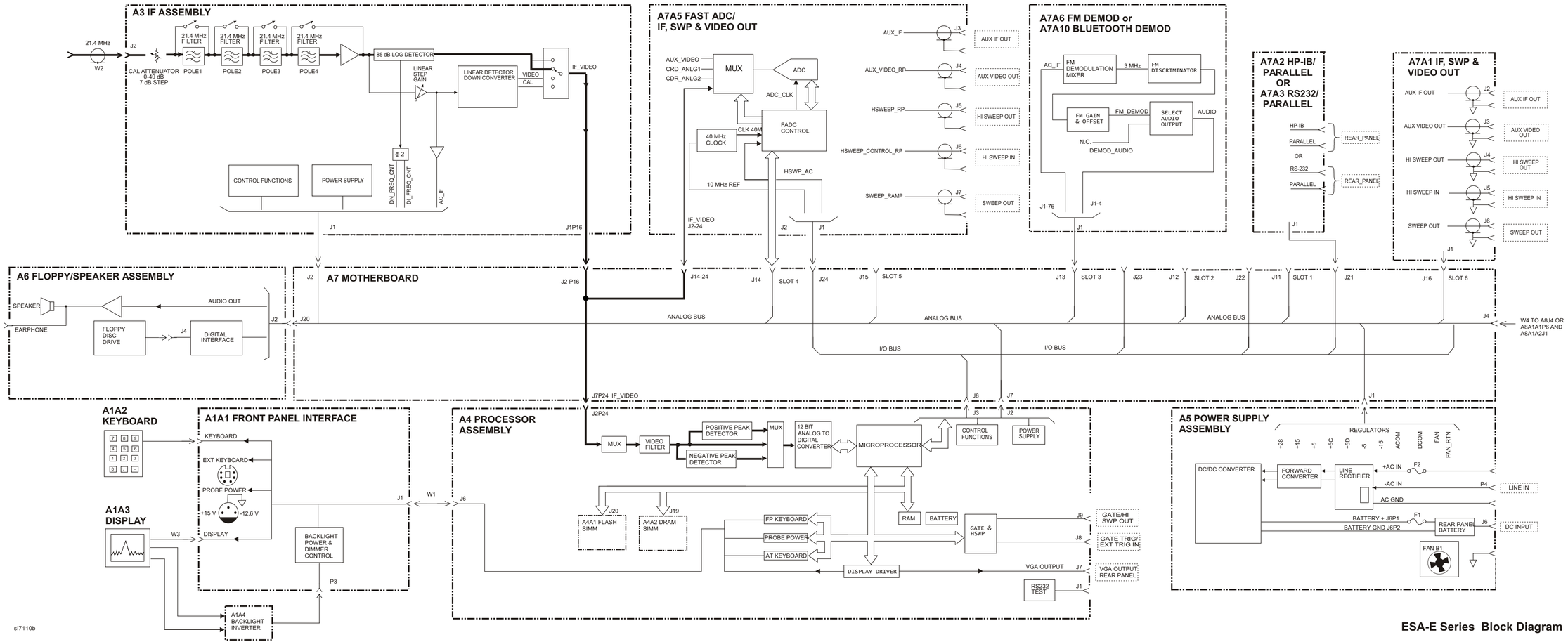


ESA-E Series Block Diagram

# E4402B/E4403B RF SECTION BLOCK DIAGRAM

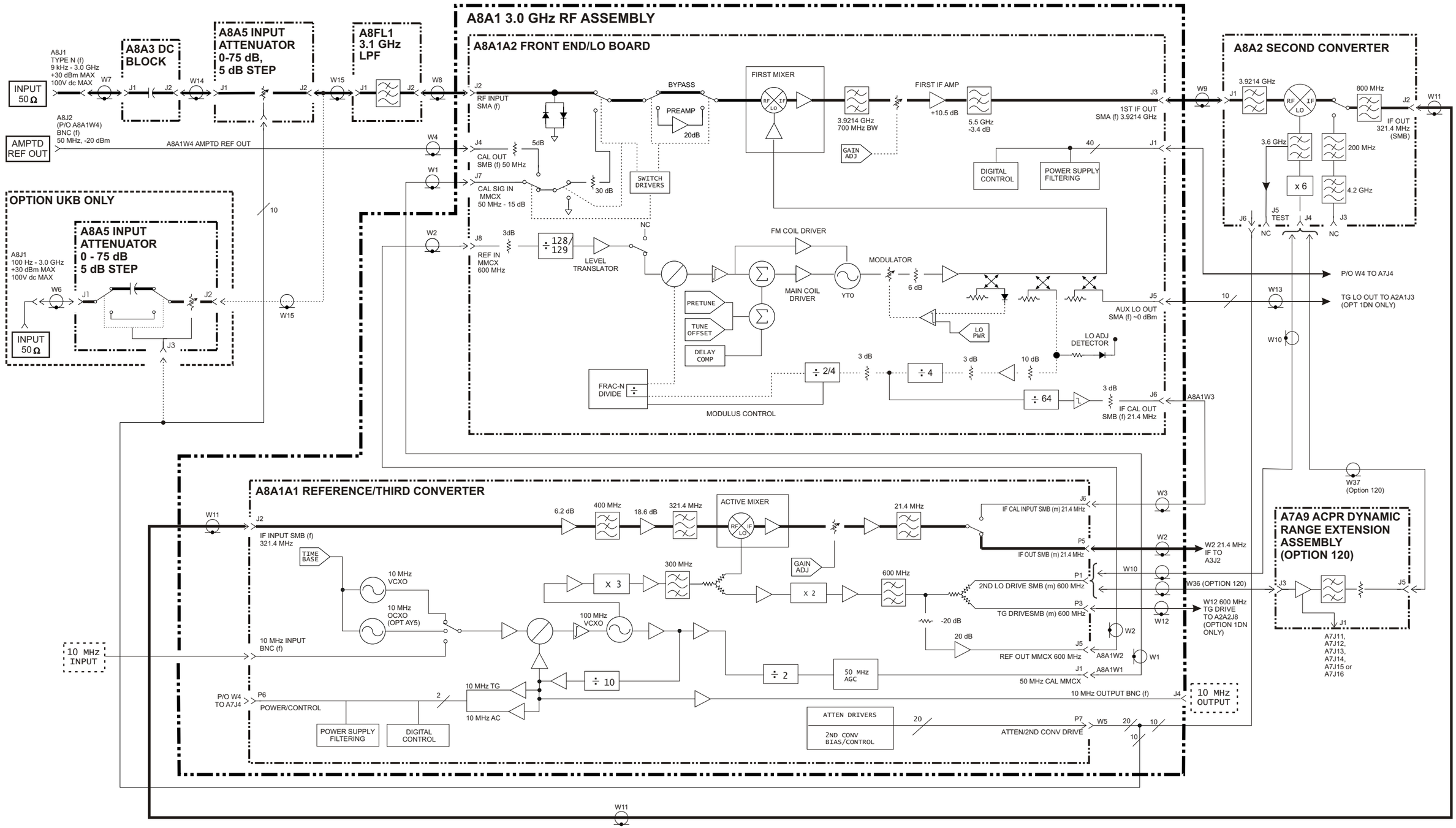


sl7101b

E4402B/E4403B RF SECTION BLOCK DIAGRAM

# E4404B, E4405B, E4407B, AND E4408B RF SECTION BLOCK DIAGRAM

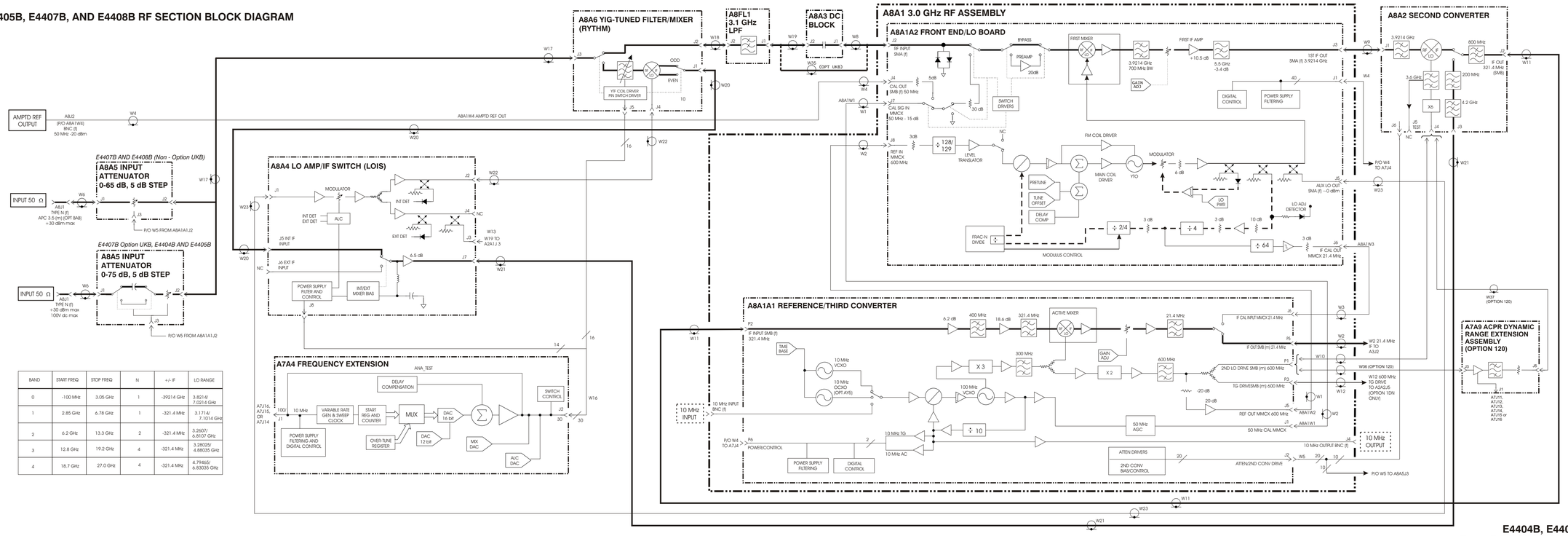


| BAND | START FREQ | STOP FREQ | N | +/- IF | LO RANGE |
|---|---|---|---|---|---|
| 0 | -100 MHz | 3.05 GHz | 1 | -39214 GHz | 3.8214/ 7.0214 GHz |
| 1 | 2.85 GHz | 6.78 GHz | 1 | -321.4 MHz | 3.1714/ 7.1014 GHz |
| 2 | 6.2 GHz | 13.3 GHz | 2 | -321.4 MHz | 3.2607/ 6.8107 GHz |
| 3 | 12.8 GHz | 19.2 GHz | 4 | -321.4 MHz | 3.28035/ 4.88035 GHz |
| 4 | 18.7 GHz | 27.0 GHz | 4 | -321.4 MHz | 4.79465/ 6.83035 GHz |

s7109b

E4404B, E4405B, E4407B, AND E4408B RF SECTION BLOCK DIAGRAM

# Tracking Generator Block Diagrams

**Figure 3-2** **A2 1.5 GHz Tracking Generator Block Diagram, E4401B and E4411B**

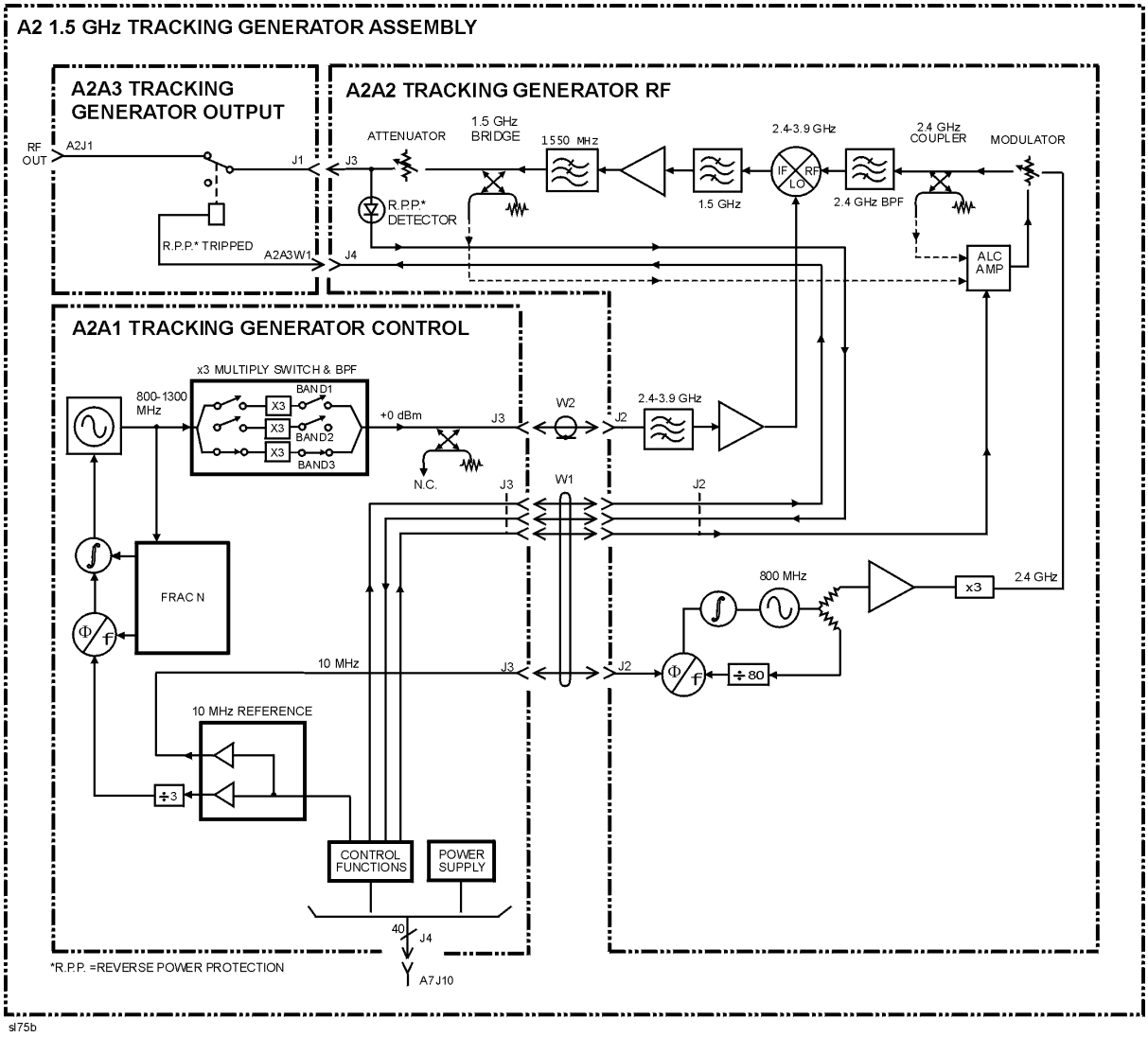

**Figure 3-3** **A2 3.0 GHz Tracking Generator Block Diagram, E4402B, E4403B, E4404B, E4405B, E4407B, and E4408B**

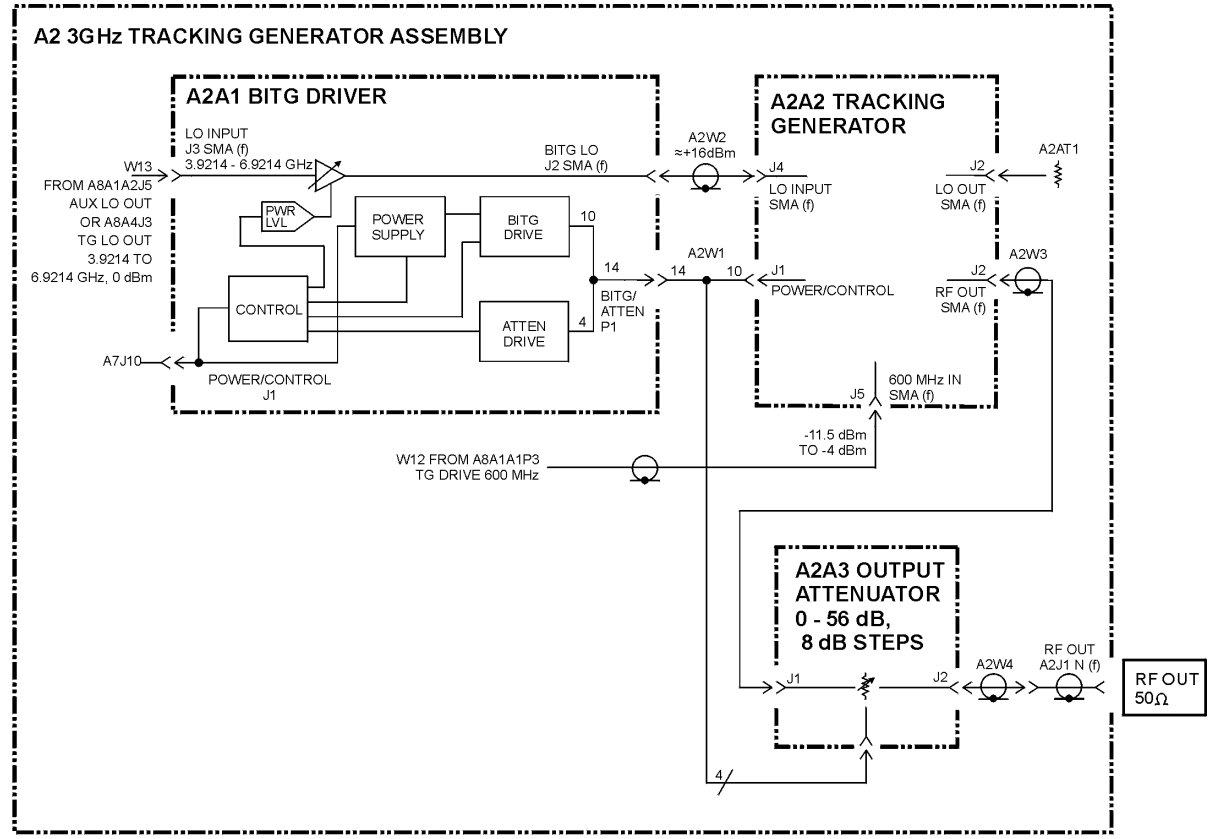

# Digital Demod DSP/Fast ADC Block Diagram

**Figure 3-4** **A7A7 DSP Block Diagram, E4402B, E4404B, E4405B, and E4407B**

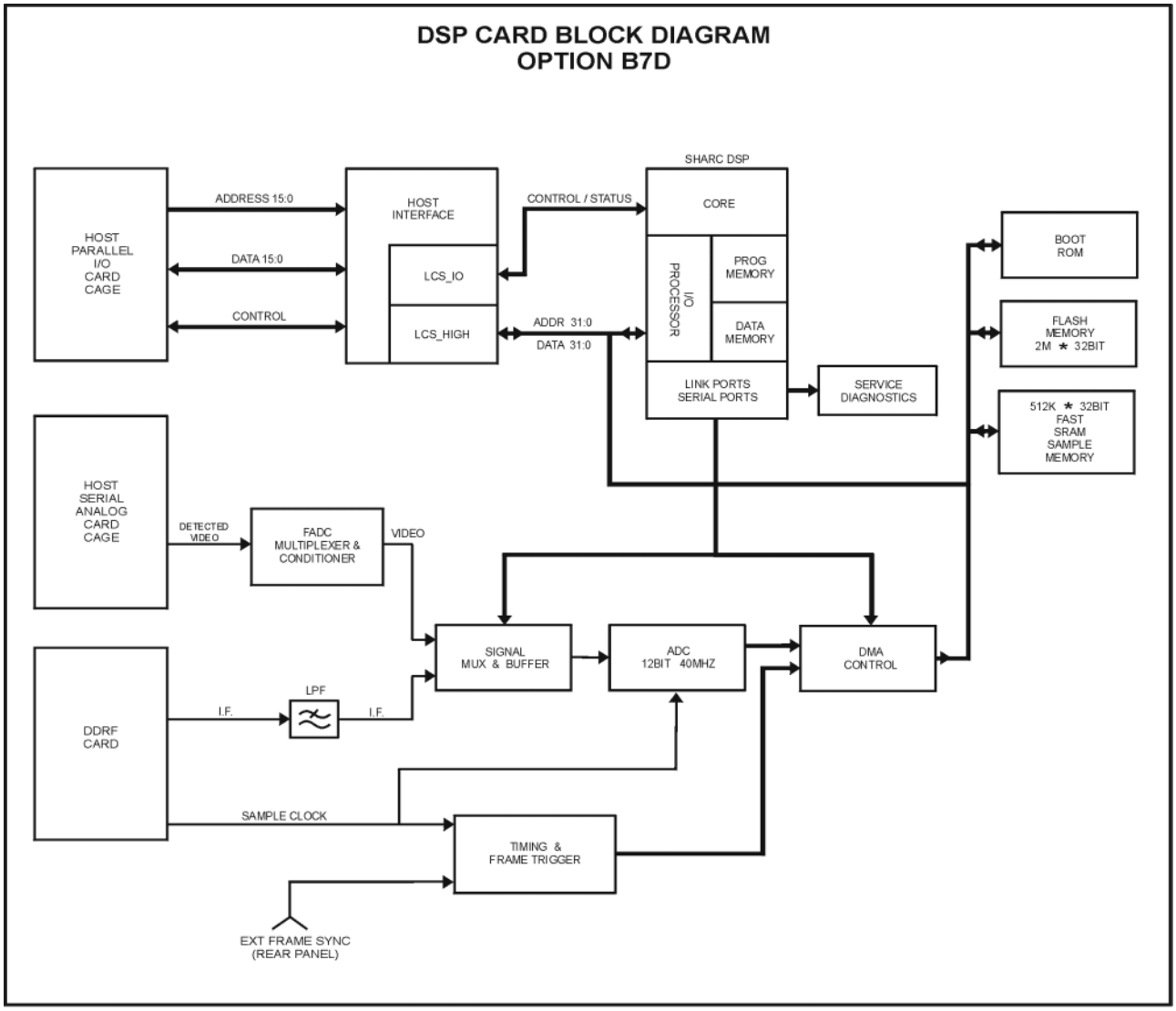


sl78c

# Digital Demod RF Block Diagram

**Figure 3-5** **A7A8 DD RF Block Diagram, E4402B, E4404B, E4405B, and E4407B**

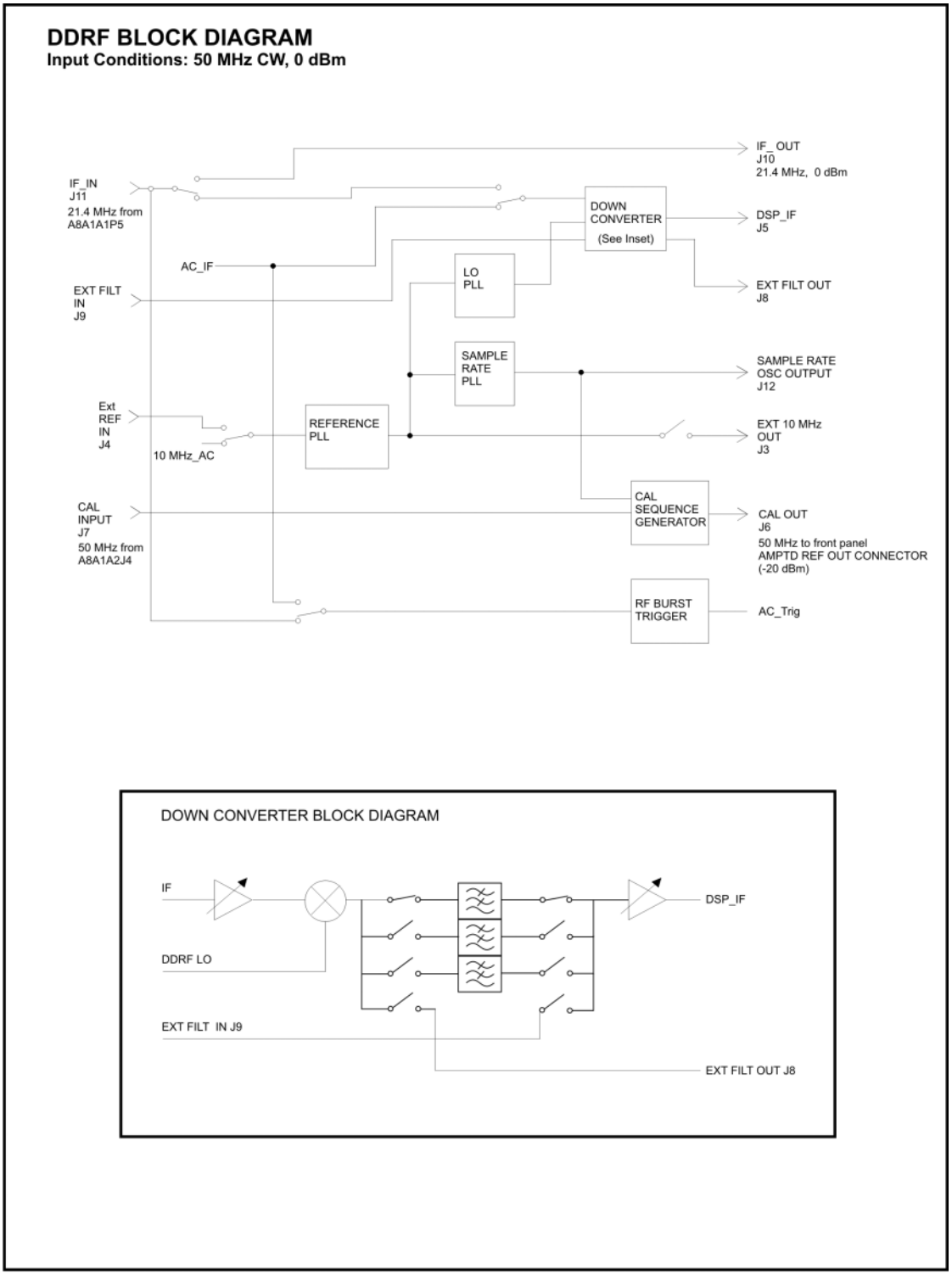


sl77c

# 4 Options and Accessories

This chapter lists the options and accessories that can be ordered along with your analyzer. The Option Table on the following page shows which options are available for your particular product.

**Table 4-1 Option Table**

| Option | | E4411B | E4401B | E4402B | E4403B | E4404B | E4405B | E4407B | E4408B |
|---|---|---|---|---|---|---|---|---|---|
| 042 | Gray Backpack carrying case | • | • | • | • | • | • | • | • |
| 044 | Yellow Backpack carrying case | • | • | • | • | • | • | • | • |
| 049 | Color Display[1] | • | | | • | | | | • |
| 060 | Low Emission[2,3] | | • | • | | • | • | • | |
| 106 | Bluetooth FM Demodulation[4] | | | • | | • | • | • | |
| 120 | ACPR Dynamic Range Extension | | | • | | • | • | • | |
| 219 | Noise Figure Measurement Personality and Hardware | | • | • | | • | • | • | |
| 225 | Distance to Fault Measurement Personality | | • | • | | • | • | • | |
| 226 | Phase Noise Measurement Personality | | • | • | | • | • | • | |
| 227 | Cable TV Measurement Personality | | • | • | | • | • | • | |
| 228 | Bluetooth Measurement Personality | | | • | | • | • | • | |
| 230 | Benchlink Web Remote Control Software[5] | • | • | • | • | • | • | • | • |
| 266 | 8566 Series Programming Code Compatibility | • | • | • | • | • | • | • | • |
| 303 | Bluetooth General Purpose Bundle | | | • | | • | • | • | |
| 304 | Bluetooth Premium Bundle | | | • | | • | • | • | |
| 0B0 | Delete Manual Set | • | • | • | • | • | • | • | • |
| 0B1 | Add Manual Set | • | • | • | • | • | • | • | • |
| 0BV | Service Documentation, Component Level | • | • | • | • | • | • | • | • |
| 0BW | Service Documentation, Assembly Level | • | • | • | • | • | • | • | • |
| 1AX | RS-232 and Parallel Interface[6] | • | • | • | • | • | • | • | • |
| 1CP | Rack Mount with Handles | • | • | • | • | • | • | • | • |
| 1D5 | High Stability Frequency Reference | | • | • | | • | • | • | |
| 1D6 | Time-Gated Spectrum Analysis | | • | • | | • | • | • | |
| 1D7 | 50 to 75 Ohm Matching Pad | • | • | • | • | • | • | • | • |
| 1DN | 50 Ohm Tracking Generator | • | • | • | • | • | • | • | • |
| 1DP | 75 Ohm input[7] | • | • | | | | | | |
| 1DR | Narrow Resolution Bandwidths | • | • | • | • | • | • | • | • |

**Table 4-1 Option Table (Continued)**

| Option | | E4411B | E4401B | E4402B | E4403B | E4404B | E4405B | E4407B | E4408B |
|---|---|---|---|---|---|---|---|---|---|
| 1DQ | 75 Ohm Tracking Generator[8] | • | • | | | | | | |
| 1DS | RF Preamplifier | | • | • | | • | • | • | |
| A4H | GPIB and Parallel Interface[9] | • | • | • | • | • | • | • | • |
| A4J | IF, Video and Sweep Ports | • | • | • | • | • | • | • | • |
| A5D | DC Power Cable | • | • | • | • | • | • | • | • |
| AXT | Transit Case | • | • | • | • | • | • | • | • |
| AYT | Gray Soft Carrying/Operating Case | • | • | • | • | • | • | • | • |
| AYU | Yellow Carrying/Operating Case | • | • | • | • | • | • | • | • |
| AYX | Fast Time Domain Sweeps | | • | • | | • | • | • | |
| AYZ | External Mixing | | | | | | | • | |
| B70 | Benchlink Spectrum Analyzer | • | • | • | • | • | • | • | • |
| B72 | Enhanced Memory Upgrade | | • | • | | • | • | • | |
| B74 | RF and Digital Communications Hardware | | | • | | • | • | • | |
| B75 | Performance Bundle[7] | | • | • | | • | • | • | |
| B7B | TV Trigger and Picture on Screen[10] | | • | • | | • | • | • | |
| B7D | Digital Signal Processing and Fast ADC | | | • | | • | • | • | |
| B7E | RF Communications Hardware | | | • | | • | • | • | |
| B7K | Distance to Fault Accessory Kit | | | • | | • | • | • | |
| BAA | FM Demodulation[11] | | • | • | | • | • | • | |
| BAB | APC 3.5 Input Connector | | | | | | | • | • |
| BAC | cdmaOne Measurement Personality | | | • | | • | • | • | |
| BAH | GSM Measurement Personality | | | • | | • | • | • | |
| UE2 | Firmware Upgrade Kit | • | • | • | • | • | • | • | • |
| UKB | Low Frequency Extension[12] | | | • | | • | • | • | |
| UK6 | Commercial Calibration[7] | • | • | • | • | • | • | • | • |
| UK9 | Front Panel Cover | • | • | • | • | • | • | • | • |
| W30 | 3 Year Service Support | • | • | • | • | • | • | • | • |

**Table 4-1 Option Table (Continued)**

| Option | | E4411B | E4401B | E4402B | E4403B | E4404B | E4405B | E4407B | E4408B |
|---|---|---|---|---|---|---|---|---|---|
| W32 | 3 Year Calibration Contract | • | • | • | • | • | • | • | • |
| W50 | 5 Year Service Support | • | • | • | • | • | • | • | • |
| W52 | 5 Year Calibration Contract | • | • | • | • | • | • | • | • |

1. Option 049 is standard on newer ESA-L Series analyzers.
2. This option is incompatible with Option B7B.
3. This option operates only with ac input power. Battery or dc power will not enable this option on the analyzer.
4. Option 106 is incompatible with Option BAA.
5. This option requires Option A4H or 1AX.
6. Option 1AX is incompatible with Option A4H.
7. This option is only available at time of purchase.
8. This option has a 75 Ohm output impedance, and is only available with Option 1DP.
9. Option A4H is incompatible with Option 1AX.
10. Option B7B requires Option BAA.
11. Option BAA is incompatible with Option 106
12. Option UKB requires Option 1DR.

# Options

Options can be ordered by option number when you order your analyzer. Some of the options are also available as kits that can be ordered and installed after you have received your spectrum analyzer. Refer to Table 4-1 on page 144 to determine which options are available for your particular product.

# How to Order Options

At the time of instrument purchase, options can be ordered using your product number and the number of the option you are ordering. For example, if you are ordering Option 1D6 for an Agilent E4401B, you would order E4401B 1D6.

If you are ordering an option after the purchase of your analyzer, you will need to add a U (for upgrade) to the product number and then specify which option you are ordering.

The options are listed in alphabetical order by name below for your review. If you know the option you wish to order, refer to Table 4-1 on page 144 which is in ascending order by option number.

## 12 Vdc Power Cable (Option A5D)

Option A5D provides a 12 Vdc power cable that allows your analyzer to be powered from 12 V automotive or truck batteries.

## 3 Year Calibration Contract (Option W32)

Option W32 provides your analyzer with a 3 year instrument calibration contract.

## 3 Year Service Support (Option W30)

Option W30 provides your analyzer with a total of 3 years of service support. This adds a 2 year service contract to the analyzer's base 1 year warranty.

## 5 Year Calibration Contract (Option W52)

Option W52 provides your analyzer with a 5 year instrument calibration contract.

## 5 Year Service Support (Option W50)

Option W50 provides your analyzer with a total of 5 years of service support. This adds a 4 year service contract to the analyzer's base 1 year warranty.

## 50 Ω to 75 Ω Matching Pad (Option 1D7)

This option provides a 50 Ω to 75 Ω matching pad with dc block to be used on the analyzer input. The pad has a frequency range of 9 MHz to 2 GHz. It adapts your standard 50 Ω analyzer to be compatible with a 75 Ω system under test. Connector types are 50 Ω Type-N (m) to 75 Ω BNC (f).

## 50 Ohm Tracking Generator (Option 1DN)

Option 1DN provides a 9 kHz to 1.5 GHz built-in tracking generator for the Agilent E4401B and the Agilent E4411B. Option 1DN provides a 9 kHz to 3 GHz

built-in tracking generator for the Agilent E4402B, E4403B, E4404B, E4405B, E4407B and E4408B. This source creates a source-receiver combination that allows insertion-loss, frequency response, and return-loss measurements. The tracking generator has a wide distortion-free dynamic range, plus good sensitivity and selectivity.

## 75 Ohm Input Impedance (Option 1DP)

This option provides a 75 Ω input impedance instead of the standard 50 Ω impedance. Analyzers with this option use cables, circuit boards, and front panels that are different from the standard units. Option 1DP is only available on the Agilent E4401B and E4411B.

Option 1DP is not available after the purchase of your analyzer.

## 75 Ohm Tracking Generator (Option 1DQ)

Option 1DQ provides a 1 MHz to 1.5 GHz built-in tracking generator for the Agilent E4401B and the Agilent E4411B. Option 1DQ provides a 1 MHz to 3 GHz built-in tracking generator for the Agilent E4402B, E4403B, E4404B, E4405B, and E4407B. This source creates a source-receiver combination that allows insertion-loss, frequency response, and return-loss measurements. The tracking generator has a wide distortion-free dynamic range, plus good sensitivity and selectivity.

Option 1DQ has a 75 Ω output impedance, and is only available with Option 1DP.

## 8566 Series Programming Code Compatibility (Option 266)

Option 266 allows use of a limited set of 8566 Series programming commands to control the ESA Series analyzers. When this option is enabled, SCPI commands are disabled if the remote language selected is not SCPI.

## ACPR Dynamic Range Extension (Option 120)

Option 120 provides extended dynamic range for ACPR measurements by improving phase noise at offsets 800 kHz to 8 MHz.

## Additional Manual Set (Option 0B1)

Option 0B1 provides an additional copy of the *Agilent ESA Spectrum Analyzers User's Guide, Agilent ESA Spectrum Analyzers Calibration Guide*, *Agilent ESA Spectrum Analyzers Specifications Guide - E Series* or *Agilent ESA Spectrum Analyzers Specifications Guide - L Series*, and the *Agilent ESA Spectrum Analyzers Reference Guide*.

## APC 3.5 Input Connector (Option BAB)

The type-N female connector is replaced with an APC 3.5 mm male connector. An

APC 3.5 (f) to APC 3.5 (f), and BNC (f) to SMA (m) adapters are included for alignment purposes.

## Backpack Operating and Carrying Cases (Option 042/044)

Options 042 and 044 are protective soft operating and backpack carrying cases. Option 042 is made of gray rip-stop nylon and Option 044 is made of yellow rip-stop nylon. An outside pocket holds manuals or other accessories. Reinforced adjustable padded shoulder straps provides ergonomic distribution between your shoulder. The front and rear panel soft covers adjust to be compatible with the front panel protective hard cover (Option UK9) and snap on battery pack (Agilent E1779BA). Side ventilation allows for operation without removal, but the maximum operating temperature is reduced to 45 °C.

## Benchlink Spectrum Analyzer (Option B70)

Option B70 provides the Benchlink Spectrum Analyzer software which can be used to capture screen images and trace data using a personal computer (PC). The captured information can then be used in other PC applications, including word processing and spread sheets.

## Benchlink Web Remote Control Software (Option 230)

Option 230 provides software which can be used to control the analyzer remotely over the web. When the analyzer is connected via GP-IB to one personal computer (PC), access to the analyzer is available through any internet connection by specifying the IP address of the physically connected PC. The following analyzer functions are available through remote web access:

- front panel control
- capture screen images
- capture trace data
- remote programming commands (SCPI)

## Bluetooth FM Demodulation (Option 106)

Option 106 is required to perform FM demodulation on signals measured with the Bluetooth Measurement Personality (Option 228).

Option 106 allows you to demodulate, display and measure deviation on Bluetooth FM modulated signals. You can listen to audio signals on a built-in speaker or with an earphone.

Option 106 provides the following additional port:

EXT VIDEO OUT - provides a detected video output (before the analog-to-digital conversion) proportional to the vertical deflection of the trace (75 Ω).

## Bluetooth General Purpose Bundle (Option 303)

Option 303 provides

- Bluetooth FM Demodulation (Option 106)
- Bluetooth Measurement Personality (Option 228)
- Fast Digitized Time Domain Sweeps (Option AYX)
- Enhanced Memory Upgrade (Option B72)

## Bluetooth Measurement Personality (Option 228)

Option 228 provides transmitter and receiver measurements required to test Bluetooth devices. The set of Bluetooth measurements includes:

- Modulation Overview
- Output Power
- Carrier Frequency Drift
- Monitor Band/Channel
- Initial Carrier Frequency Tolerance
- Modulation Characteristics

Option 228 includes: Bluetooth user's guide, Bluetooth quick reference card, Bluetooth measurement guide, and Bluetooth programming commands manual.

Bluetooth FM Demodulation (Option 106) is required for full functionality of this personality.

## Bluetooth Premium Bundle (Option 304)

Option 304 provides the following:

- Bluetooth demodulator board (Option 106)
- Bluetooth measurement personality (Option 228)
- high stability frequency reference (Option 1D5)
- digital signal processing and fast ADC (Option B7D)
- RF communications hardware (Option B7E)
- enhanced memory upgrade (Option B72)
- RF preamplifier (Option 1DS)

## Cable TV Measurement Personality (Option 227)

Option 227 provides measurement capabilities necessary for installation and service of cable TV.

## cdmaOne Measurement Personality (Option BAC)

Option BAC provides transmitter and receiver measurements that comply with various international digital communications standards, including TIA/EIA/IS-95-A, TIA/EIA-95-B, TIA/EIA/IS-97-A, TIA/EIA-97-B, TIA/EIA/IS-98-A, TIA/EIA-98-B, J-STD-008, J-STD-018, J-STD-019, ARIB STD-T53, CKOR, and PKOR. The set of cdmaOne measurements includes:

- channel power
- receiver channel power
- modulation accuracy (RHO)
- code domain power
- receiver spurious
- out-of-band spurious
- harmonics
- occupied bandwidth
- monitor channel/band
- close-in spur

Option BAC includes a cdmaOne user's guide, cdmaOne quick reference card, cdmaOne measurement guide and cdmaOne programming commands manual.

**NOTE** For optimum performance of this personality, installation of "RF and Digital Communications Hardware (Option B74)" is recommended.

## Color Display (Option 049)

Option 049 provides a color display on ESA-L Series analyzers (E4403B, E4408B, and E4411B). Option 049 is standard on all newer ESA-L Series analyzers and may be retrofitted into older analyzers.

## Commercial Calibration with Test Data (Option UK6)

Option UK6 provides the factory calibration test data and the standard commercial calibration certificate on the initial analyzer shipment.

Option UK6 is only available at time of purchase.

## Component Level Service Documentation (Option 0BV)

Option 0BV provides a copy of the *Agilent ESA Spectrum Analyzers Component-Level Information*. The component-level information includes parts lists, component-location diagrams, and schematic diagrams for selected repairable assemblies.

## Delete Manual Set (Option 0B0)

Option 0B0 deletes copies of the *Agilent ESA Spectrum Analyzers User's Guide, Agilent ESA Spectrum Analyzers Calibration Guide*, *Agilent ESA Spectrum Analyzers Specifications Guide - E Series* or *Agilent ESA Spectrum Analyzers Specifications Guide - L Series*, and the *Agilent ESA Spectrum Analyzers Reference Guide.*

## Digital Signal Processing and Fast ADC (Option B7D)

Option B7D provides digital signal processing and fast ADC. This option is required for many of the mobile communication measurements in the GSM and cdmaOne measurement personalities. Option B7D must be ordered with Option B7E (RF communications hardware) and Option 1D5 (high stability frequency reference).

For A.07.00 firmware revisions and later, either this option or Option AYX (Fast Digitized Time Domain Sweeps) is required to perform the PowerStat Complementary Cumulative Distribution Function (PowerStat CCDF) for all radio standards. It is also required to perform the ACP measurement when the NADC radio standard is selected.

## Distance to Fault Accessory Kit (Option B7K)

Option B7K includes the 86205A (RF bridge), 11636A (power divider), 909A (coax termination), 11512A (coax short), 8120-8687 (coax cable), and 9211-0050 (padded case).

## Distance to Fault Measurement Personality (Option 225)

Option 225 performs a Fast Fourier Transform to calculate the distance to a cable fault. This option must be ordered with 50 Ω Tracking Generator (Option 1DN). This measurement includes on-screen instructional dialog to guide set up and calibration. Velocity factor and cable loss can be user-defined or selected from several different pre-defined cable types.

## Enhanced Memory Upgrade (Option B72)

Option B72 provides 2 SIMMS which increases the analyzer's RAM to 32 MBytes and its flash or data storage memory to 16 MBytes (10 MBytes of which are available to the user for data storage).

## External Mixing (Option AYZ)

Option AYZ allows the use of Agilent 11970 Series, and Agilent 11974 external mixers with the Agilent E4407B analyzer to extend the frequency range to 110 GHz. Operation to 325 GHz is also possible with non-Agilent mixers.

## Fast Digitized Time Domain Sweeps (Option AYX)

Option AYX allows fast digitized sweep times as fast as 20 µsec in spans of 0 Hz. This option is required to perform the Complementary Cumulative Distribution Function (CCDF) available in A.07.00 firmware revisions and later. Refer to the **Sweep** key description in the user's guide for information about possible sweep times. It also provides the following additional inputs and outputs:

Option AYX - provides the analyzer with additional inputs and outputs. They are as follows: SWP OUT, HI SWP OUT (TTL), HI SWP IN (TTL), AUX VIDEO OUT, and AUX IF OUT.

SWP OUT - sweep ramp output, provides a voltage ramp proportional to the sweep of the analyzer (0 V to 10 V).

HI SWP OUT (TTL) - provides the HI SWP TTL signal as an output (TTL high during a sweep, TTL low during a retrace). It indicates when the analyzer is sweeping

HI SWP IN (TTL) - allows external sweep control. It can be grounded to stop and reset the sweep.

AUX VIDEO OUT - provides detected video output (before the analog-to-digital conversion) proportional to vertical deflection of the trace.

AUX IF OUT - provides a 50 Ω, 21.4 MHz IF output that is the down-converted signal of the RF input of the analyzer.

For A.07.00 firmware revisions and later, either this option or Option B7D (Digital Signal Processing and Fast ADC) is required to perform the PowerStat Complementary Cumulative Distribution Function (PowerStat CCDF) for all radio standards. It is also required to perform the ACP measurement when the NADC radio standard is selected.

## Firmware Upgrade Kit (Option UE2)

Option UE2 provides the most current ESA spectrum analyzer firmware on 3-1/2 inch floppy disks.

## FM Demodulation (Option BAA)

Option BAA allows you to demodulate, display and measure deviation on FM modulated signals. You can listen to audio signals on a built-in speaker or with an earphone.

Option BAA provides the following additional port:

EXT VIDEO OUT - provides a detected video output (before the analog-to-digital conversion) proportional to the vertical deflection of the trace (75 Ω).

## Front Panel Protective Cover (Option UK9)

The cover assembly snaps onto the front of your analyzer to protect the front panel during travel and when the unit is not in use. The front panel protective cover includes a storage compartment to house small accessories or cables.

## GPIB and Parallel Interface (Option A4H)

Option A4H allows you to control your analyzer from a computer that uses a general purpose interface bus (GPIB). Option A4H includes an GPIB connector, a parallel interface connector for printers, a CD-ROM containing IntuiLink Toolbar software[1], and the *Agilent ESA Spectrum Analyzers Programmer's Guide*.

Option A4H allows the analyzer to copy its display to a printer.

## GSM Measurement Personality (Option BAH)

Option BAH provides transmitter and receiver measurements that comply with various international digital communications standards, including ETS 300 607-1, ETS 300 609-1, ETS 300 910, and J-STD-007. The set of GSM measurements includes, transmit power, power steps, power versus time, spurious emissions suite, intermodulation attenuation suite, phase and frequency error, cable fault location suite, slow frequency hopping cycle verification, monitor suite, and output RF spectrum suite. Option BAH includes a GSM user's guide, GSM quick reference card, GSM measurement guide, and programming commands manual.

## Hard Transit Case (Option AXT)

Option AXT provides a hard transit case. The hard transit case will survive commercial transportation. This rugged case has two wheels and an extendible handle for easy transport. The case can also accommodate two battery packs and ac adapters.

## High Stability Frequency Reference (Option 1D5)

Option 1D5 improves the frequency reference accuracy. The analyzer's synthesizer is phase locked to an oven controlled crystal oscillator (OCXO), instead of the standard VCXO.

## IF, Sweep and Video Ports (Option A4J)

Option A4J provides the analyzer with additional inputs and outputs. They are as follows: SWP OUT, HI SWP OUT (TTL), HI SWP IN (TTL), AUX VIDEO OUT, and AUX IF OUT.

SWP OUT - sweep ramp output, provides a voltage ramp proportional to the sweep

1. This program allows you to download spectrum analyzer display or data files to a personal computer using Microsoft® Word or Microsoft® Excel. Benchlink installation instructions are included with the CD-ROM.

of the analyzer (0 V to 10 V).

HI SWP OUT (TTL) - provides the HI SWP TTL signal as an output (TTL high during a sweep, TTL low during a retrace). It indicates when the analyzer is sweeping.

HI SWP IN (TTL) - allows external sweep control. It can be grounded to stop sweeping.

AUX VIDEO OUT - provides detected video output (before the analog-to-digital conversion) proportional to vertical deflection of the trace.

AUX IF OUT - provides a 50 Ω, 21.4 MHz IF output that is the down-converted signal of the RF input of the analyzer.

## Low Emission (Option 060)

Option 060 provides reduced radiated and conducted emissions to comply with EN55011 Class B requirements. This option applies during ac operation only.

Option 060 is incompatible with TV Trigger (Option B7B).

## Low Frequency Extension (Option UKB)

Option UKB extends the frequency range of the analyzer on the low end to 100 Hz when DC coupling is selected. This option requires installation of "Narrow Resolution Bandwidth (Option 1DR)" on ESA models E4402B, E4404B, E4405B, and E4407B.

## Narrow Resolution Bandwidth (Option 1DR)

This option provides additional narrow resolution bandwidths of 10 Hz, 30 Hz, 100 Hz, and 300 Hz and 200 Hz EMI. These bandwidths improve the analyzer sensitivity and allow you to resolve closely spaced signals.

## Noise Figure Measurement Personality and Hardware (Option 219)

This option provides noise figure and gain measurement capability on the ESA-E Series spectrum analyzers. Support for Agilent Technologies SNS Series Noise Sources, and for normal noise sources, such as the HP/Agilent 346-Series noise sources, is provided.

## Operating and Carrying Cases (Option AYT/AYU)

Options AYT and AYU are protective soft operating and carrying cases. Option AYT is made of gray rip-stop nylon and Option ATU is made of yellow rip-stop nylon. An outside pocket holds manuals or other accessories. A reinforced adjustable padded shoulder strap provides ergonomic distribution between your hand and shoulder. The front and rear panel soft covers adjust to be compatible with the front panel protective hard cover (Option UK9) and snap on battery pack

(Agilent E1779B). Side ventilation allows for operation without removal, but the maximum operating temperature is reduced to 45 °C.

## Performance Bundle (Option B75)

Option B75 provides the pre-amplifier, narrow resolution bandwidths, and high stability frequency reference. Refer to Options 1DS, 1DR, and 1D5 for details.

This option is only available at time of purchase.

## Phase Noise Measurement Personality (Option 226)

Option 226 provides an automatic log plot display of phase noise (dBc/Hz) vs. log offset frequency. It includes spot frequency and RMS noise. High Stability Frequency Reference (*Option 1D5*) is recommended.

## Pre-amplifier (Option 1DS)

The pre-amplifier improves the analyzer's sensitivity (lowers the noise floor) by approximately 16 dB.

## Rack Mount Kit With Handles (Option 1CP)

Option 1CP provides the parts necessary to mount the analyzer in an Agilent System II cabinet or in a standard 19 inch (482.6 mm) equipment rack. It includes front handles and rack slides for added convenience.

## RF and Digital Communications Hardware (Option B74)

Option B74 includes the RF Communications Hardware (*Option B7E*), Digital Signal Processing and Fast ADC (*Option B7D*), Time-Gated Spectrum Analysis (*Option 1D6*), Memory Extension (*Option B72*), High Stability Frequency Reference (*Option 1D5*), Preamplifier (*Option 1DS*), and Narrow Resolution Bandwidth (*Option 1DR*) assemblies. These assemblies are required for optimum performance of the cdmaOne (*Option BAC*) or GSM measurement personality (*Option BAH*).

## RF Communications Hardware (Option B7E)

Option B7E provides the communications hardware required for many digital communication measurements. Option B7E must be ordered with Option B7D (digital signal processing and fast ADC) and Option 1D5 (high stability frequency reference).

## RS-232 and Parallel Interface (Option 1AX)

Option 1AX allows you to control your analyzer from a computer that uses an RS-232 interface. It includes a 2.5 meter 9-pin (f) to 9-pin (f) connector RS-232

cable (Agilent 5182-4794), a parallel interface connector for printers, a CD-ROM containing IntuiLink Toolbar software[1], and the *Agilent ESA Spectrum Analyzers Programmer's Guide*.

Option 1AX allows the analyzer to copy its display to a printer.

## Service Documentation (Option 0BW)

Option 0BW provides a paper copy and PDF on CDROM version of the *Agilent ESA Spectrum Analyzers Service Guide*. Also included is the ESA Specifications Guide, Calibration Guide, and Instrument Messages and Functional Tests, and the ESA Documentation Set on CDROM.

## Time-Gated Spectrum Analysis (Option 1D6)

Option 1D6 allows you to selectively measure the spectrum of signals that may overlap in the frequency domain, but are separated in the time domain. By adjusting a time gate based on a user-supplied trigger signal, you can significantly increase the diagnostic capability of your spectrum analyzer for time-interleaved signals.

## TV Trigger and Picture on Screen (Option B7B)

*Option B7B requires Option BAA*.

Option B7B allows you to trigger the analyzer sweep on a TV line of a demodulated TV waveform and view TV images in NTSC, PAL and SECAM standards on the analyzer display.

Option B7B provides the following additional ports:

EXT VIDEO IN/TV TRIG OUT - provides a shared baseband video input and a TTL output for the TV trigger (output through 75 Ω source impedance).

EXT VIDEO OUT - provides a detected video output (before the analog-to-digital conversion) proportional to the vertical deflection of the trace (similar to Option BAA alone), and provides passthrough of the signal at EXT VIDEO IN/TV TRIG OUT, if selected (75 Ω).

1. This program allows you to download spectrum analyzer display or data files to a personal computer using Microsoft® Word or Microsoft® Excel. Benchlink installation instructions are included with the CD-ROM.

# Accessories

A number of accessories are available from Agilent Technologies to help you configure your analyzer for your specific applications. They can be ordered through your local Agilent Sales and Service Office and are listed below in alphabetical order by name.

## 50 Ω/75 Ω Minimum Loss Pad

The Agilent 11852B is a low VSWR minimum loss pad that allows you to make measurements on 75 Ω devices using an analyzer with a 50 Ω input. It is effective over a frequency range of dc to 2 GHz.

## 75 Ω Matching Transformer

The Agilent 11694A allows you to make measurements in 75 Ω systems using an analyzer with a 50 Ω input. It is effective over a frequency range of 3 to 500 MHz.

## AC Probe

The Agilent 85024A high frequency probe performs in-circuit measurements without adversely loading the circuit under test. The probe has an input capacitance of 0.7 pF shunted by 1 MΩ of resistance and operates over a frequency range of 300 kHz to 3 GHz. High probe sensitivity and low distortion levels allow measurements to be made while taking advantage of the full dynamic range of the spectrum analyzer.

The Agilent 41800A low frequency probe has a low input capacitance and a frequency range of 5 Hz to 500 MHz.

## Broadband Preamplifiers and Power Amplifiers

Preamplifiers and power amplifiers can be used with your spectrum analyzer to enhance measurements of very low-level signals.

The Agilent 8447D preamplifier provides a minimum of 25 dB gain from 100 kHz to 1.3 GHz.

The Agilent 87405A preamplifier provides a minimum of 22 dB gain from 10 MHz to 3 GHz. (Power is supplied by the probe power output of the analyzer.)

The Agilent 85905A CATV 75 ohm preamplifier provides a minimum of 18 dB gain from 45 MHz to 1 GHz. (Power is supplied by the probe power output of the analyzer.)

The 11909A low noise preamplifier provides a minimum of 32 dB gain from 9 kHz to 1 GHz and a typical noise figure of 1.8 dB.

## Carrying Strap (Part Number E4401-60028)

This carrying strap comes with Options AYT and AYU. It can also be ordered separately and used with Agilent ESA spectrum analyzers.

## External Keyboard

The HP C1405B keyboard is an IBM AT compatible keyboard that can be connected to the external keyboard connector on the front panel of the analyzer. You may use any IBM AT compatible keyboard with a mini DIN connector. Screen titles and filenames can be entered with the external keyboard.

## GPIB Cable

For use with Option A4H. The Agilent 10833 Series GPIB cables interconnect GPIB devices and are available in four different lengths. GPIB cables are used to connect controllers to a spectrum analyzer.

## Agilent 11970 Series Harmonic Mixers

The 11970 Series harmonic mixers are available to extend the frequency range of analyzers with Option AYZ (external mixing) up to 110 GHz. The following six models are available:

**Table 4-2**

| Agilent Model Number | Frequency Range |
|---|---|
| 11970K | 18.0 to 26.5 GHz |
| 11970A | 26.5 to 40.0 GHz |
| 11970Q | 33.0 to 50.0 GHz |
| 11970U | 40.0 to 60.0 GHz |
| 11970V | 50.0 to 75.0 GHz |
| 11970W | 75.0 to 110 GHz |

## Agilent 11974 Series Preselected Millimeter Mixers

11974 Series preselected millimeter mixers are available to extend the frequency range of analyzers with Option AYZ (external mixing) up to 75 GHz. Preselection reduces mixer overload from broadband signals, reduces radiation of local oscillator harmonics back to the device under test, and reduces the level of image

and multiple responses displayed. The following four models are available:

**Table 4-3**

| Agilent Model Number | Frequency Range |
|---|---|
| 11974A | 26.5 to 40.0 GHz |
| 11974Q | 33.0 to 50.0 GHz |
| 11974U | 40.0 to 60.0 GHz |
| 11974V | 50.0 to 75.0 GHz |

## Agilent E1779BA Battery Pack

The E1779BA is a battery pack that will power an Agilent ESA spectrum analyzer for 80 to 114 minutes, depending on the options installed in the analyzer. Refer to the *E1779BA Battery Pack User's Guide* for more information.

## Parallel Interface Cable

For use with Option A4H and 1AX. The Agilent C2950A parallel interface cable is a 36-pin to 25-pin male-to-male 2 meter cable used to connect supported printers to a spectrum analyzer. This cable is IEEE-1284 compliant.

## Printer

**For use with Option A4H or 1AX.** The DeskJet personal printers provide black and white or color printing for another form of permanent records of your test results. The HP LaserJet series printers are also compatible. The printers connect to the parallel interface installed on the spectrum analyzer with either Option A4Hor 1AX.

## RF and Transient Limiters

The Agilent 11867A and 11693A RF Limiters protect the spectrum analyzer input circuits from damage due to high power levels. The 11867A operates over a frequency range of dc to 1800 MHz and begins reflecting signal levels over 1 mW up to 10 W average power and 100 watts peak power. The 11693A microwave limiter (0.1 to 12.4 GHz, usable to 18 GHz) guards against input signals over 1 milliwatt up to 1 watt average power and 10 watts peak power.

The 11947A Transient Limiter protects the spectrum analyzer input circuits from damage due to signal transients. It specifically is needed for use with a line impedance stabilization network (LISN). It operates over a frequency range of 9 kHz to 200 MHz, with 10 dB of insertion loss.

## RF Bridges

The Agilent 86205A 50 Ω RF bridge and 86207A 75 Ω RF bridge can be used to make reflection measurements using an analyzer with tracking generator Option 1DN or 1DQ or with an external signal generator. These external directional bridges offer high directivity and excellent port match. The 86205A operates over a frequency range of 300 kHz to 6 GHz. The 86207A operates over a frequency range of 300 kHz to 3 GHz.

## RS-232 Cable

For use with Option 1AX. The HP 24542G is a 3 meter 9-pin (f) to 25-pin (m) RS-232 cable. The HP 24542U is a 3 meter 9-pin (f) to 9-pin (f) RS-232 cable for serial 9-pin PC connection to an analyzer. The modem cable required is HP 24542M 9-pin (f) to 25-pin (m), and the PC cable is HP 24542U. The Agilent 5182-4794 is a 2.5 meter 9-pin (f) to 9-pin (f) RS-232 cable for serial 9-pin PC connection to an analyzer (included with Option 1AX).

# 5 Parts List

## What You Will Find in This Chapter

This chapter contains information for identifying and ordering replacement assemblies.

Major assembly location information is provided in Chapter 6.

Component level information containing material lists, schematics, and component location diagrams, is available separately.

The following tables are included in this chapter:

- Table 5-1 lists reference designator descriptions.
- Table 5-2 lists abbreviations used in the parts list.
- Table 5-3 lists value multipliers.
- Table 5-4 lists replacement parts.

# How to Order Parts

To order an assembly or mechanical part listed in this chapter, quote the Agilent Technologies, Inc. part number and indicate the quantity required.

To order a part that is *not* listed, include the following information with the order:

- Analyzer model number.
- Analyzer serial number.
- Description of where the part is located, what it looks like, and its function (if known).
- Quantity needed

Parts can be ordered by addressing the order to the nearest Agilent Technologies, Inc. office. Customers within the USA can also use either the direct mail-order system, or the direct phone-order system described below. The direct phone-order system has a toll-free phone number available.

## Direct Mail-Order System

Within the USA, Agilent Technologies, Inc. can supply parts through a direct mail-order system. Advantages of using the system are as follows:

- Direct ordering and shipment from Agilent Technologies, Inc.
- No maximum or minimum on any mail order. (There is a minimum order amount for parts ordered through a local Agilent Technologies, Inc. office when the orders require billing and invoicing.)
- Prepaid transportation. (There is a small handling charge for each order.)
- No invoices.

To provide these advantages, a check or money order must accompany each order. Mail-order forms and specific ordering information are available through your local Agilent Technologies, Inc. office.

## Direct Phone-Order System

Within the USA, a phone order system is available for regular and hotline replacement parts service. A toll-free phone number is available, and Mastercard and Visa are accepted. Outside the USA, get in touch with your local sales and service office. Refer to "Contacting Agilent Technologies" on page 241.

### General Information

**Table 5-1 Reference Designations**

| REFERENCE DESIGNATIONS | | | | | |
|---|---|---|---|---|---|
| A | Assembly | F | Fuse | T | Transformer |
| AT | Attenuator, Isolator, Limiter, Termination | FL | Filter | TB | Terminal Board |
| | | HY | Circulator | TC | Thermocouple |
| B | Fan, Motor | J | Electrical Connector (Stationary Portion), Jack | TP | Test Point |
| BT | Battery | | | U | Integrated Circuit, Microcircuit |
| C | Capacitor | | | | |
| CP | Coupler | K | Relay | V | Electron Tube |
| CR | Diode, Diode Thyristor, Step Recovery Diode, Varactor | L | Coil, Inductor | VR | Breakdown Diode (Zener), Voltage Regulator |
| | | M | Meter | | |
| | | MP | Miscellaneous Mechanical Part | | |
| DC | Directional Coupler | P | Electrical Connector (Movable Portion), Plug | W | Cable, Wire, Jumper |
| DL | Delay Line | | | X | Socket |
| DS | Annunciator, Lamp, Light Emitting Diode (LED), Signaling Device (Visible) | Q | Silicon Controlled Rectifier (SCR), Transistor, Triode Thyristor | Y | Crystal Unit (Piezoelectric, Quartz) |
| | | | | Z | Tuned Cavity, Tuned Circuit |
| | | R | Resistor | | |
| E | Miscellaneous Electrical Part | RT | Thermistor | | |
| | | S | Switch | | |

**Table 5-2 Abbreviations**

| | |
|---|---|
| **A** | |
| A | Across Flats, Acrylic, Air (Dry Method), Ampere |
| ADJ | Adjust, Adjustment |
| ANSI | American National Standards Institue (formerly USASI-ASA) |
| ASSY | Assembly |
| AWG | American Wire Gage |
| **B** | |
| BCD | Binary Coded Decimal |
| BD | Board, Bundle |
| BE-CU | Beryllium Copper |
| BNC | Type of Connector |
| BRG | Bearing, Boring |
| BRS | Brass |
| BSC | Basic |
| BTN | Button |
| **C** | |
| C | Capacitance, Capacitor, Center Tapped, Cermet, Cold, Compression |
| CCP | Carbon Composition Plastic |
| CD | Cadmium, Card, Cord |
| CER | Ceramic |
| CHAM | Chamfer |
| CHAR | Character, Characteristic, Charcoal |
| CMOS | Complementary Metal Oxide Semiconductor |
| CNDCT | Conducting, Conductive, Conductivity, Conductor |
| CONT | Contact, Continuous Control, Controller |

**Table 5-2 Abbreviations (Continued)**

| | |
|---|---|
| CONV | Converter |
| CPRSN | Compression |
| CUP-PT | Cup Point |
| CW | Clockwise, Continuous Wave |
| **D** | |
| D | Deep, Depletion, Depth, Diameter, Direct Current |
| DA | Darlington |
| DAP-GL | Diallyl Phthalate Glass |
| DBL | Double |
| DCDR | Decoder |
| DEG | Degree |
| D-HOLE | D-Shaped Hole |
| DIA | Diameter |
| DIP | Dual In-Line Package |
| DIP-SLDR | Dip Solder |
| D-MODE | Depletion Mode |
| DO | Package Type Designation |
| DP | Deep, Depth, Diametric Pitch, Dip |
| DP3T | Double Pole Three Throw |
| DPDT | Double Pole Double Throw |
| DWL | Dowell |
| **E** | |
| E-R | E-Ring |
| EXT | Extended, Extension, External, Extinguish |
| **F** | |
| F | Fahrenheit, Farad, Female, Film (Resistor), Fixed, Flange, Frequency |

**Table 5-2 Abbreviations (Continued)**

| | |
|---|---|
| FC | Carbon Film/Composition, Edge of Cutoff Frequency, Face |
| FDTHRU | Feedthrough |
| FEM | Female |
| FIL-HD | Fillister Head |
| FL | Flash, Flat, Fluid |
| FLAT-PT | Flat Point |
| FR | Front |
| FREQ | Frequency |
| FT | Current Gain Bandwidth Product (Transition Frequency), Feet, Foot |
| FXD | Fixed |
| **G** | |
| GEN | General, Generator |
| GND | Ground |
| GP | General Purpose, Group |
| **H** | |
| H | Henry, High |
| HDW | Hardware |
| HEX | Hexadecimal, Hexagon, Hexagonal |
| HLCL | Helical |
| HP | Hewlett-Packard Company, High Pass |
| **I** | |
| IC | Collector Current, Integrated Circuit |
| ID | Identification, Inside Diameter |
| IF | Forward Current, Intermediate Frequency |
| IN | Inch |
| INCL | Including |

**Table 5-2 Abbreviations (Continued)**

| | |
|---|---|
| INT | Integral, Intensity, Internal |
| **J** | |
| J-FET | Junction Field Effect Transistor |
| JFET | Junction Field Effect Transistor |
| **K** | |
| K | Kelvin, Key, Kilo, Potassium |
| KNRLD | Knurled |
| KVDC | Kilovolts Direct Current |
| **L** | |
| LED | Light Emitting Diode |
| LG | Length, Long |
| LIN | Linear, Linearity |
| LK | Link, Lock |
| LKG | Leakage, Locking |
| LUM | Luminous |
| **M** | |
| M | Male, Maximum, Mega, Mil, Milli, Mode |
| MA | Milliampere |
| MACH | Machined |
| MAX | Maximum |
| MC | Molded Carbon Composition |
| MET | Metal, Metallized |
| MHz | Megahertz |
| MINTR | Miniature |
| MIT | Miter |
| MLD | Mold, Molded |
| MM | Magnetized Material, Millimeter |
| MOM | Momentary |
| MTG | Mounting |

**Table 5-2 Abbreviations (Continued)**

| | |
|---|---|
| MTLC | Metallic |
| MW | Milliwatt |
| **N** | |
| N | Nano, None |
| N-CHAN | N-Channel |
| NH | Nanohenry |
| NM | Nanometer, Nonmetallic |
| NO | Normally Open, Number |
| NOM | Nominal |
| NPN | Negative Positive Negative (Transistor) |
| NS | Nanosecond, Non-Shorting, Nose |
| NUM | Numeric |
| NYL | Nylon (Polyamide) |
| **O** | |
| OA | Over-All |
| OD | Outside Diameter |
| OP AMP | Operational Amplifier |
| OPT | Optical, Option, Optional |
| **P** | |
| PA | Picoampere, Power Amplifier |
| PAN-HD | Pan Head |
| PAR | Parallel, Parity |
| PB | Lead (Metal), Pushbutton |
| PC | Printed Circuit |
| PCB | Printed Circuit Board |
| P-CHAN | P-Channel |
| PD | Pad, Power Dissipation |
| PF | Picofarad, Power Factor |
| PKG | Package |

**Table 5-2 Abbreviations (Continued)**

| | |
|---|---|
| PLSTC | Plastic |
| PNL | Panel |
| PNP | Positive Negative Positive (Transistor) |
| POLYC | Polycarbonate |
| POLYE | Polyester |
| POT | Potentiometer |
| POZI | Pozidrive Recess |
| PREC | Precision |
| PRP | Purple, Purpose |
| PSTN | Piston |
| PT | Part, Point Pulse Time |
| PW | Pulse Width |
| **Q** | |
| Q | Figure of Merit |
| **R** | |
| R | Range, Red, Resistance, Resistor, Right, Ring |
| REF | Reference |
| RES | Resistance, Resistor |
| RF | Radio Frequency |
| RGD | Rigid |
| RND | Round |
| RR | Rear |
| RVT | Rivet, Riveted |
| **S** | |
| SAWR | Surface Acoustic Wave Resonator |
| SEG | Segment |
| SGL | Single |
| SI | Silicon, Square Inch |
| SL | Slide, Slow |

**Table 5-2 Abbreviations (Continued)**

| | |
|---|---|
| SLT | Slot, Slotted |
| SMA | Subminiature, A Type (Threaded Connector) |
| SMB | Subminiature, B Type (Slip-on Connector) |
| SMC | Subminiature, C-Type (Threaded Connector) |
| SPCG | Spacing |
| SPDT | Single Pole DoubleThrow |
| SPST | Single Pole SingleThrow |
| SQ | Square |
| SST | Stainless Steel |
| STL | Steel |
| SUBMIN | Subminiature |
| SZ | Size |
| **T** | |
| T | Teeth, Temperature, Thickness,Time, Timed, Tooth, Typical |
| TA | Ambient Temperature, Tantalum |
| TC | Temperature Coefficient |
| THD | Thread, Threaded |
| THK | Thick |
| TO | Package Type Designation |
| TPG | Tapping |
| TR-HD | Truss Head |
| TRMR | Trimmer |
| TRN | Turn, Turns |
| TRSN | Torsion |
| **U** | |
| UCD | Microcandela |
| UF | Microfarad |

**Table 5-2 Abbreviations (Continued)**

| | |
|---|---|
| UH | Microhenry |
| UL | Microliter, Underwriters' Laboratories, Inc. |
| UNHDND | Unhardened |
| **V** | |
| V | Variable, Violet, Volt, Voltage |
| VAC | Vacuum, Volts—Alternating Current |
| VAR | Variable |
| VDC | Volts— Direct Current |
| **W** | |
| W | Watt, Wattage, White, Wide,Width |
| W/SW | With Switch |
| WW | Wire Wound |
| **X** | |
| X | By (Used with Dimensions), Reactance |
| **Y** | |
| YIG | Yttrium-Iron-Garnet |
| **Z** | |
| ZNR | Zener |

**Table 5-3 Multipliers**

| MULTIPLIERS | | | | | |
|---|---|---|---|---|---|
| Abbreviation | Prefix | Multiple | Abbreviation | Prefix | Multiple |
| T | tera | $10^{12}$ | m | milli | $10^{-3}$ |
| G | giga | $10^{9}$ | µ | micro | $10^{-6}$ |
| M | mega | $10^{6}$ | n | nano | $10^{-9}$ |
| k | kilo | $10^{3}$ | p | pico | $10^{-12}$ |
| da | deka | 10 | f | femto | $10^{-15}$ |
| d | deci | $10^{-1}$ | a | atto | $10^{-18}$ |
| c | centi | $10^{-2}$ | | | |

# Replaceable Parts

**Table 5-4 Assembly Level Replaceable Parts**

| Reference Designator | Description | Agilent Part Number | E4401B/ E4411B | E4402B/ E4403B | E4404B | E4405B | E4407B/ E4408B |
|---|---|---|---|---|---|---|---|
| A1A1 | Front Panel Interface Board Kit | E4401-60241 | X | X | X | X | X |
| A1A1A1 | Rotary Pulse Generator | 1990-1865 | X | X | X | X | X |
| A1A1MP1 | Backlight Inverter Shield | E4401-00046 | X | X | X | X | X |
| A1A1W1 | Backlight Inverter Cable | 8120-8482 | X | X | X | X | X |
| A1A1A2 | Volume Rotary Pulse Generator | 0960-0892 | X | X | X | X | X |
| A1A2 | Liquid Crystal Display Assembly Kit (Serial Prefix ≥US4119) | E4401-60242 | X | X | X | X | X |
| | Liquid Crystal Display Assembly Kits (one each required) (Serial Prefix <US4119) | E4401-60241 | X | X | X | X | X |
| | | E4401-60242 | X | X | X | X | X |
| A1A2A2 | Backlight Inverter Board | 0950-3644 | X | X | X | X | X |
| A1A2DS1 | Display Backlight, Upper<br>• LCD with white backing on rear of LCD. | E4401-60241 & E4401-60242 | X | X | X | X | X |
| | • LCD with metal backing and a distinct 1/4” step backlight is 2090-0380. | 2090-0380 | | | | | |
| A1A2DS2 | Display Backlight, Lower | E4401-60241 & E4401-60242 2090-0380 | X | X | X | X | X |
| A1A2MP1 | LCD Bracket | E4401-00034 | X | X | X | X | X |
| A1A3 | Front Frame Assembly *(except Option 060)* (includes A1A3MP9) | E4401-60257 | X | X | X | X | X |
| | Front Frame Assembly (50 Ω) *(Option 060)* (includes A1A3MP9) | E4401-60259 | X | X | X | X | X |
| A1A3MP9 | Lens/Keypad Assembly *(except Option 060)* | E4401-60127 | X | X | X | X | X |
| | Lens/Keypad Assembly *(Option 060)* | E4401-60256 | X | X | X | X | X |
| A1A4 | Rear Frame Assembly | E4401-60160 | X | X | X | X | X |
| A1A5 | Shock Spreader Assembly | E4403-60032 | | X | X | X | X |

**Table 5-4 Assembly Level Replaceable Parts**

| Reference Designator | Description | Agilent Part Number | E4401B/ E4411B | E4402B/ E4403B | E4404B | E4405B | E4407B/ E4408B |
|---|---|---|---|---|---|---|---|
| A1MP3 | Subpanel Kit | E4401-60104 | X | X | X | X | X |
| A1MP4 | Flex Circuit, Main | E4401-60198 | X | X | X | X | X |
| A1MP5 | Main Keypad | E4401-40002 | X | X | X | X | X |
| A1MP7 | RPG Knob | 0370-3229 | X | X | X | X | X |
| A1MP8 | Volume Knob | 0370-3230 | X | X | X | X | X |
| A1MP10 | Front Panel Connector Cover | E4401-40006 | X | X | X | X | X |
| A1MP12 | Media Bezel with Gasket | E4401-60197 | X | X | X | X | X |
| A1MP13 | Volume Knob Gasket | E4401-20044 | X | X | X | X | X |
| A1MP14 | Media Door | E4401-40004 | X | X | X | X | X |
| A1MP15 | Tracking Generator I/O Hole Plug | E4401-40020 | X | X | X | X | X |

**Table 5-4 Assembly Level Replaceable Parts**

| Reference Designator | Description | Agilent Part Number | E4401B/ E4411B | E4402B/ E4403B | E4404B | E4405B | E4407B/ E4408B |
|---|---|---|---|---|---|---|---|
| A1MP16 | Model ID Nameplate, 1.5 GHz (50 Ω) *(E4411B)* | E4411-80012 | X | | | | |
| | Model ID Nameplate, 1.5 GHz (75 Ω) *(E4411B) (Option 1DP)* | E4411-80013 | X | | | | |
| | Model ID Nameplate, 1.5 GHz (75 Ω) (E4411B) (Option $HD_x$) | E4411-80014 | X | | | | |
| | Model ID Nameplate, 1.5 GHz (50 Ω) *(E4401B)* | E4401-80027 | X | | | | |
| | Model ID Nameplate, 1.5 GHz (75 Ω) Option 1DP *(E4401B)* | E4401-80028 | X | | | | |
| | Model ID Nameplate, 3.0 GHz (50 Ω) *(E4402B)* | E4402-80002 | | X | | | |
| | Model ID Nameplate, 3.0 GHz (50 Ω) *(E4402B) (Option UKB)* | E4403-80016 | | X | | | |
| | Model ID Nameplate, 3.0 GHz (50 Ω) *(E4403B)* | E4403-80008 | | X | | | |
| | Model ID Nameplate, 6.7 GHz (50 Ω) *(E4404B)* | E4404-80004 | | | X | | |
| | Model ID Nameplate, 6.7 GHz (50 Ω) *(E4404B) (Option UKB)* | E4404-80008 | | | X | | |
| | Model ID Nameplate, 13.2 GHz (50 Ω) *(E4405B)* | E4405-80003 | | | | X | |
| | Model ID Nameplate, 13.2 GHz (50 Ω) *(E4405B) (Option UKB)* | E4405-80006 | | | | X | |
| | Model ID Nameplate, 26.5 GHz (50 Ω) *(E4407B)* | E4407-80003 | | | | | X |
| | Model ID Nameplate, 26.5 GHz (50 Ω) *(E4407B) (Option UKB)* | E4407-80006 | | | | | X |
| | Model ID Nameplate, 26.5 GHz (50 Ω) *(E4408B)* | E4408-80003 | | | | | X |
| A1MP17 | Front Frame Grounding Clip Kit (5 pieces) | E4401-00054 | X | X | X | X | X |
| A1MP18 | RF Input Connector Gasket (50 Ω) | E4403-20046 | X | X | X | X | X |
| A1MP19 | TG Output Connector Gasket (50 Ω) *(Option 1DN)* | E4403-20046 | X | X | X | X | X |
| A1MP20 | Amptd Ref Out/Ext Mixer Gasket | E4401-20089 | X | X | X | X | X |

**Table 5-4 Assembly Level Replaceable Parts**

| Reference Designator | Description | Agilent Part Number | E4401B/ E4411B | E4402B/ E4403B | E4404B | E4405B | E4407B/ E4408B |
|---|---|---|---|---|---|---|---|
| A1MP21 | Connector Label, (50 Ω) | E4401-80003 | X | | | | |
| | Connector Label, (75 Ω) | E4401-80002 | X | | | | |
| | Connector Label, 3 GHz *(except Option UKB)* | E4403-80002 | | X | | | |
| | Connector Label, 3 GHz *(Option UKB) (E4402B)* | E4403-80015 | | X | | | |
| | Connector Label, 6.7GHz *(except Option UKB)* | E4404-80001 | | | X | | |
| | Connector Label, 6.7GHz *(Option UKB)* | E4404-80007 | | | X | | |
| | Connector Label, 13.2 GHz *(except Option UKB)* | E4405-80001 | | | | X | |
| | Connector Label, 13.2 GHz *(Option UKB)* | E4405-80005 | | | | X | |
| | Connector Label, 26.5GHz | E4407-80001 | | | | | X |
| | Connector Label, External Mixing Connector *(E4407B) (Option AYZ)* | E4407-80005 | | | | | X |
| | Connector Label, 26.5GHz *(E4407B) (Option UKB)* | E4407-80007 | | | | | X |
| | Connector Label, 26.5GHz *(E4407B) (Options UKB and AYZ)* | E4407-80008 | | | | | X |
| A2 | 1.5 GHz Tracking Generator Assembly (50 Ω) *(Option 1DN)* | E4401-60128 | X | | | | |
| | 1.5 GHz Tracking Generator Assembly (75 Ω) *(Option 1DQ)* | E4401-60129 | X | | | | |
| A2A1 | 1.5 GHz Tracking Generator Control Board Kit, *(Option 1DN/1DQ)* | E4401-60131 | X | | | | |
| | 3.0 GHz Tracking Generator Driver Board Assy with shields, *(Option 1DN)* | E4403-60043 | | X | X | X | X |
| | 3.0 GHz Tracking Generator Driver Board Assy with shields, *(Option 1DN)* exchange | E4403-69043 | | X | X | X | X |

**Table 5-4 Assembly Level Replaceable Parts**

| Reference Designator | Description | Agilent Part Number | E4401B/ E4411B | E4402B/ E4403B | E4404B | E4405B | E4407B/ E4408B |
|---|---|---|---|---|---|---|---|
| A2A2 | 1.5 GHz Tracking Generator RF Board Kit (50 Ω) *(Option 1DN)* | E4401-60133 | X | | | | |
| | 1.5 GHz Tracking Generator RF Board Kit (75 Ω) *(Option 1DQ)* | E4401-60134 | X | | | | |
| | 3.0 GHz BITG Microcircuit Assembly, *(Option 1DN and not HSB)* | E4403-60089 | | X | X | X | X |
| | 3.0 GHz BITG Microcircuit, *(Option HSB)* | 5087-7705 | | X | X | X | X |
| A2A3 | 1.5 GHz TG Output Board (50 Ω) *(Option 1DN)* | E4401-60135 | X | | | | |
| | 1.5 GHz TG Output Board (75 Ω) *(Option 1DQ)* | E4401-60136 | X | | | | |
| | 3.0 GHz TG Output Attenuator (without Bracket A2MP5), *(Option 1DN)* | 0955-0679 | | X | X | X | X |
| A2J1 | Type-N Connector, 1.5 GHz TG RF Output (50 Ω) *(Option 1DN)* | 1250-2514 | X | | | | |
| | BNC Connector, 1.5 GHz TG RF Output (75 Ω) *(Option 1DQ)* | 1250-2792 | X | | | | |
| | Type-N Connector Kit, 3.0 GHz TG RF Output, *(Option 1DN)* | E4403-60015 | | X | X | X | X |
| A2MP1 | Gasket–BNC, 1.5 GHz TG RF Output Connector (75 Ω) *(Option 1DN/1DQ)* | E4401-20024 | X | | | | |
| A2MP2 | 3.0 GHz TG Support Shield, *(Option 1DN)* | E4403-60007 | | X | X | X | X |
| A2MP3 | 3.0 GHz TG Cover Shield, *(Option 1DN)* | E4403-60006 | | X | X | X | X |
| A2MP4 | 1.5 GHz TG Center Shield, *(Options 1DN/1DQ)* | E4401-60052 | X | | | | |
| A2MP5 | 3.0 GHz Attenuator Bracket *(Option 1DN)* | E4403-00004 | | X | X | X | X |
| A2MP7 | 1.5 GHz TG Control Shield, *(Options 1DN/1DQ)* | E4401-60051 | X | | | | |
| A2MP9 | 1.5 GHz TG RF Shield, *(Options 1DN/1DQ)* | E4401-60050 | X | | | | |

**Table 5-4 Assembly Level Replaceable Parts**

| Reference Designator | Description | Agilent Part Number | E4401B/ E4411B | E4402B/ E4403B | E4404B | E4405B | E4407B/ E4408B |
|---|---|---|---|---|---|---|---|
| A2W1 | Cable Assembly, 1.5 GHz TG (Internal Ribbon) *(Options 1DN/1DQ)* | 8120-6944 | X | | | | |
| | Cable Assembly, 3.0 GHz TG Power and Control (Wire Harness) *(Option 1DN)* | E4403-60025 | | X | X | X | X |
| A2W2 | Cable Assembly, 1.5 GHz TG (Internal Coaxial) *(Options 1DN/1DQ)* | 8120-6384 | X | | | | |
| | Cable Assembly, 3.0 GHz TG LO Drive (Semi-rigid) *(Option 1DN)* | E4403-20072<br>E4403-20083 | | X | X | X | X |
| A2W3 | Cable Assembly, 3.0 GHz TG RF Output (Semi-rigid) *(Option 1DN)* | E4403-20073 | | X | X | X | X |
| A2W4 | Cable Assembly, 3.0 GHz TG Attenuator RF Output (Semi-rigid) *(Option 1DN)* | E4403-20022 | | X | X | X | X |
| A3 | IF Assembly with Shields | E4401-60401 | X | X | X | X | X |
| A4 | Processor Assembly, Enhanced Memory *(Option B72)* | E4401-60233 | X | X | X | X | X |
| A4A1 | 12 MB Flash SIMM, *(Option B72)* | E4401-60081 | X | X | X | X | X |
| | 4 MB Flash SIMM | E4401-60105 | X | X | X | X | X |
| A4A2 | 32 MB DRAM SIMM, *(Option B72)* | 1818-6431 | X | X | X | X | X |
| | 16 MB DRAM SIMM | 1818-6430C | X | X | X | X | X |
| A4MAU58 | 3 V Lithium Battery | 1420-0556 | X | X | X | X | X |
| A5 | Power Supply Assembly | E4401-60222 | X | X | X | X | X |
| A5B1 | Fan | 3160-0866 | X | X | X | X | X |
| A5F1 | Fuse (dc) 20 A, 32 V | 2110-1317 | X | X | X | X | X |
| | DC Fuse kit w/label | E4401-60286 | X | X | X | X | X |
| A5F2 | Fuse (Line) 5 A, 250 V | 2110-0709 | X | X | X | X | X |
| A5MP1–4 | Plastic Rivet | 0361-1814 | X | X | X | X | X |
| A6 | Speaker/Floppy Assembly | E4401-60368 | X | X | X | X | X |
| A6MP1 | Transportation Disk | 1150-1806 | X | X | X | X | X |
| A7 | Motherboard (ESA E-Series) | E4401-60107 | X | X | X | X | X |
| | Motherboard (ESA L-Series) | E4411-60013 | X | X | | | X |
| A7A1 | IF Video Sweep Ports, *(Option A4J)* | E4401-60096 | X | X | X | X | X |

**Table 5-4 Assembly Level Replaceable Parts**

| Reference Designator | Description | Agilent Part Number | E4401B/ E4411B | E4402B/ E4403B | E4404B | E4405B | E4407B/ E4408B |
|---|---|---|---|---|---|---|---|
| A7A2 | GPIB Assembly, *(Option A4H)* | E4401-60367 | X | X | X | X | X |
| A7A3 | RS-232 Assembly, *(Option 1AX)* | E4401-60366 | X | X | X | X | X |
| A7A4 | Frequency Extension Assembly | E4404-60001 | | | X | X | X |
| A7A5 | Fast ADC Assembly, *(Option AYX)*[a] | E4401-60083 | X | X | X | X | X |
| A7A6 | FM Demod Assembly, *(Option BAA)*[a] | E4401-60343[b] | X | X | X | X | X |
| A7A7 | Digital Demod DSP Assembly, *(Option B7D)*[c] | E4401-60088 | | X | X | X | X |
| A7A8 | Digital Demod RF Assembly, *(Option B7E)*[d] | E4401-60295 | | X | X | X | X |
| A7A9 | ACPR Dynamic Range Extension Assembly, *(Option 120)* | E4403-60065 | | X | X | X | X |
| A7A10 | Bluetooth FM Demodulator | E4401-60223 | | X | X | X | X |
| A7A11 | Quasi Peak Detector Assembly, *(Option HYQ)* | E7401-60003 | X | X | X | X | X |
| A7A12 | IF Out Assembly *(Option H55)* | E4403-60076 | X | X | X | X | X |
| | IF Out Assembly *(Option H70)* | E4404-60034 | X | X | X | X | X |
| A7A13 | Noise Source Driver, *(part of Option 219)* | E4401-60123 | X | X | X | X | X |
| A8 | 1.5 GHz RF Assembly (50 Ω) | E4401-60402 | X | | | | |
| | 1.5 GHz RF Exchange Assembly (50 Ω) | E4401-69294 | X | | | | |
| | 1.5 GHz RF Assembly (75 Ω) *(Option 1DP)* | E4401-60100 | X | | | | |
| A8A1 | Precision Frequency Reference, *(Option 1D5)*[e] | E4401-60036 | X | | | | |
| | 3 GHz RF Complete Assy with Precision Frequency Reference | E4403-60087 | | X | X | X | X |
| A8A1W1 | Cable Assy, 50 MHz Amptd Reference Signal (Braided Coax) | E4403-60020 | | X | X | X | X |
| A8A1W2 | Cable Assy, 600 MHz Reference Signal (Braided Coax) | E4403-60020 | | X | X | X | X |
| A8A1W3 | Cable Assy, 21.4 MHz Cal Signal (Braided Coax) | E4403-60020 | | X | X | X | X |

**Table 5-4 Assembly Level Replaceable Parts**

| Reference Designator | Description | Agilent Part Number | E4401B/ E4411B | E4402B/ E4403B | E4404B | E4405B | E4407B/ E4408B |
|---|---|---|---|---|---|---|---|
| A8A1W4 | Cable/Connector Assy, 50 MHz External Amptd Ref Out Signal | 5062-0721 | | X | X | X | X |
| A8A2 | Second Converter | 5086-7958 | | X | X | X | X |
| A8A3 | dc Block *(except Option UKB)* | E4403-60026 | | X | X | X | X |
| A8A4 | LO Amplifier/IF Switch (LOIS) | E4404-60030 | | | X | X | X |
| | LO Amplifier/IF Switch (LOIS) | E4404-69030 | | | X | X | X |
| A8A5 | 3 GHz Input Attenuator *(except Option UKB)* | 33321-60051 | | X | | | |
| | 3 GHz Input Attenuator *(Option UKB)* | 33321-60052 | | X | | | |
| | 6.7/13.2 GHz Input Attenuator | 33321-60052 | | | X | X | |
| | 26.5 GHz Input Attenuator *(except Option UKB)* | 33321-60057 | | | | | X |
| | 26.5 GHz Input Attenuator *(Option UKB)* | 33321-60061 | | | | | X |
| A8A6 | 6.7/13.2 GHz YIG-Tuned Harmonic Mixer (RYTHM) | 5087-7034 | | | X | X | |
| | 6.7/13.2 GHz YIG-Tuned Harmonic Mixer (RYTHM) Exchange | 5087-6034 | | | X | X | |
| | 26.5 GHz YIG-Tuned Harmonic Mixer (RYTHM) | 5087-7031 | | | | | X |
| | 26.5 GHz YIG-Tuned Harmonic Mixer (RYTHM) Exchange | 5087-6031 | | | | | X |
| A8FL1 | 3.1 GHz Low Pass Filter (LPF) | 0955-0988 | | X | X | X | X |
| A8J1 | RF Input Type-N Connector Kit (50 Ω) *(except Option 060)* | E4403-60015 | | X | X | X | X |
| | RF Input Type-N Connector (50 Ω) *(Option 060)* | 86290-60005 | | X | X | X | X |
| | RF Input APC-3.5 Connector Kit, *(Option BAB)* | E4407-60002 | | | | | X |
| A8J10 | Type-N Connector, RF Input (50 Ω) | 1250-2514 | X | | | | |
| | BNC Connector, RF Input (75 Ω) | 1250-2792 | X | | | | |
| A8MP1 | Micro Bracket | E4404-00001 | | | X | X | X |
| | Micro Bracket *(Option UKB)* | E4404-00001 | | X | | | |

**Table 5-4 Assembly Level Replaceable Parts**

| Reference Designator | Description | Agilent Part Number | E4401B/ E4411B | E4402B/ E4403B | E4404B | E4405B | E4407B/ E4408B |
|---|---|---|---|---|---|---|---|
| A8MP2 | Sub Bracket | E4404-00003 | | | X | X | X |
| | Sub Bracket *(Option UKB)* | E4404-00003 | | X | | | |
| A8MP3 | Filter Clamp | 5022-3619 | | | X | X | X |
| | Filter Clamp *(Option UKB)* | 5022-3619 | | X | | | |
| A8MP4 | Attenuator Bracket *(except Option UKB)* | E4403-00001 | | X | | | |
| A8MP5 | Filter Bracket *(except Option UKB)* | E4403-00007 | | X | | | |
| A8MP15 | Connector Cover, 1.5 GHz RF Input | E4401-00021 | X | | | | |
| A8MP24 | Type-N Connector Gasket, RF Input (50 Ω) | E4403-20046 | X | | | | |
| | BNC Connector Gasket, RF Input (75 Ω) | E4401-20024 | X | | | | |
| MP1 | Chassis Cover, Inner Shield (Serial ≥US/MY41060000) | E4401-00067 | X | X | X | X | X |
| | Chassis & Dress Cover Kit, (Serial <US41060000) | E4401-60265 | X | X | X | X | X |
| MP4 | Dress Cover Kit (Serial ≥US41060000) | E4401-60266 | X | X | X | X | X |
| MP5 | Ergonomic Handle Including Dress Cover Hardware Kit to mount handle. | E4401-60246 | X | X | X | X | X |
| MP6 | Chassis | E4401-00045 | X | X | X | X | X |
| MP7 | Vibration Support | E4401-40026 | X | X | X | X | X |
| MP8 | Rear Blank Panel | E4401-00059 | X | X | X | X | X |
| MP9 | Handle Assembly, Ergonomic Design | E4401-60246 | X | X | X | X | X |
| MP10 | Dress Cover Hardware (For mounting ergonomic handle) | E4401-60409 | X | X | X | X | X |
| W1 | Cable Assembly, Processor to Front Panel Interface (Ribbon Cable) | 8120-6919 | X | X | X | X | X |
| W2 | Cable Assembly, 21.4 MHz IF, RF to IF (Flexible Coaxial) | 8120-6153 | X | | | | |
| | Cable Assembly, 21.4 MHz IF, RF to IF (Flexible Coaxial) | E4402-60020 | | X | X | X | X |

**Table 5-4 Assembly Level Replaceable Parts**

| Reference Designator | Description | Agilent Part Number | E4401B/ E4411B | E4402B/ E4403B | E4404B | E4405B | E4407B/ E4408B |
|---|---|---|---|---|---|---|---|
| W3[f] | Cable Assembly, Front Panel Interface to Display (Ribbon Cable) (Serial < US41190000) | E4401-60198 | X | X | X | X | X |
| | Cable Assembly, Front Panel Interface to Display (Ribbon Cable) (Serial ≥ US41190000) | E4401-60243 | X | X | X | X | X |
| W4 | Cable Assembly, RF Power and Control (Ribbon Cable) | 8120-6943 | X | | | | |
| | Cable Assembly, RF Power and Control (Ribbon Cable) | E4403-60018 | | X | X | X | X |
| W5 | Cable Assembly, Attenuator and 2nd Converter Power and Control (Ribbon Cable) | E4403-60019 | | X | | | X |
| | Cable Assembly, Attenuator and 2nd Converter Power and Control (Ribbon Cable) *(E4407B Option UKB)* | E4404-60004 | | X | | | |
| | Cable Assembly, Attenuator and 2nd Converter Power and Control (Ribbon Cable) | E4404-60004 | | | X | X | |
| W6 | Cable Assembly, RF Input (Semi-rigid Coaxial) | E4404-20009 | | | X | X | |
| | Cable Assembly, RF Input (Semi-rigid Coaxial) *(Option UKB)* | E4404-20009 | | X | | | X |
| | Cable Assembly, RF Input (Semi-rigid Coaxial) | E4404-20022 | | | | | X |
| | Cable Assembly, RF Input (Semi-rigid Coaxial) *(Option BAB)* | E4404-20017 | | | | | X |
| W7 | Cable Assembly, RF Input (Semi-rigid Coaxial) *(except Option UKB)* | E4403-20026 | | X | | | |
| W8 | Cable Assembly, Filtered Low Band RF Input (Semi-rigid Coaxial) *(except Option UKB)* | E4403-20028 | | X | | | |
| | Cable Assembly, Filtered Low Band RF Input (Semi-rigid Coaxial) *(Option UKB)* | E4403-20058 | | X | | | |
| | Cable Assembly, Filtered Low Band RF Input (Semi-rigid Coaxial) *(except Option UKB)* | E4404-20015 | | | X | X | X |

**Table 5-4 Assembly Level Replaceable Parts**

| Reference Designator | Description | Agilent Part Number | E4401B/ E4411B | E4402B/ E4403B | E4404B | E4405B | E4407B/ E4408B |
|---|---|---|---|---|---|---|---|
| W9 | Cable Assembly, 3.9107 GHz IF (Semi-rigid Coaxial) | E4403-20029 | | X | X | X | X |
| W10 | Cable Assembly, 600 MHz 2nd LO Drive (Flexible Coaxial) | 8120-8674 | | X | X | X | X |
| W11 | Cable Assembly, 2nd Converter 321.4 MHz IF Output (Flexible Coaxial) | 8120-8674 | | X | X | X | X |
| W12 | Cable Assembly, 600 MHz TG Drive (Flexible Coaxial) *(Option 1DN)* | E4402-60022 | | X | X | X | X |
| W13 | Cable Assembly, 3.0 GHz TG 1st LO Drive (Braided Coaxial), *(Option 1DN)* | E4403-20023 | | X | X | X | X |
| W14 | Cable Assembly, DC Blocked RF Input (Semi-rigid Coaxial) *(except Option UKB)* | E4403-20030 | | X | | | |
| W15 | Cable Assembly, RF Attenuator Output (Semi-rigid Coaxial) *(except Option UKB)* | E4403-20027 | | X | | | |
| | Cable Assembly, RF Attenuator Output (Semi-rigid Coaxial) *(Option UKB)* | E4403-20059 | | X | | | |
| W16 | Cable Assembly, RYTHM/LOIS Power and Control | E4404-60003 | | | X | X | X |
| W17 | Cable Assembly, RF Attenuator Output (Semi-rigid Coaxial) *(E4407B Option UKB)* | E4404-20014 | | | X | X | X |
| | Cable Assembly, RF Attenuator Output (Semi-rigid Coaxial) *(except Option UKB)* | E4404-20018 | | | | | X |
| W18 | Cable Assembly, RYTHM Low Band Output (Semi-rigid Coaxial) | E4404-20003 | | | X | X | X |
| W19 | Cable Assembly, DC Blocked RF Input (Semi-rigid Coaxial) *(except Option UKB)* | E4404-20004 | | | X | X | X |
| W20 | Cable Assembly, RYTHM 321.4 MHz IF Output (Flexible Coaxial) | 8120-8674 | | | X | X | X |
| W21 | LOIS 321.4 MHz IF Output (Flexible Coaxial) | E4404-60008 | | | X | X | X |
| W22 | Cable Assembly, RYTHM LO (Semi-rigid Coaxial) | E4404-20005 | | | X | X | X |

**Table 5-4 Assembly Level Replaceable Parts**

| Reference Designator | Description | Agilent Part Number | E4401B/ E4411B | E4402B/ E4403B | E4404B | E4405B | E4407B/ E4408B |
|---|---|---|---|---|---|---|---|
| W23 | Cable Assembly, Auxiliary LO Output (Semi-rigid Coaxial) | E4404-20008 | | | X | X | X |
| W25 | Cable Assembly, OCXO (Power and Control) *(Option 1D5)* | E4401-60043 | X | | | | |
| W26 | Cable Assembly, OCXO (Flexible Coaxial) *(Option 1D5)* | 8120-5024 | X | | | | |
| W29 | Digital Demod RF Input (Flexible Coaxial) *(Option B7E)* | E4402-60024 | | X | X | X | X |
| W30 | 50 MHz External Amptd Ref Out Kit Signal (Flexible Coaxial) *(Option B7E)* | E4402-60023 | | X | X | X | X |
| W31 | Digital Demod IF Input (Flexible Coaxial) *(Option B7E)* | E4402-60021 | | X | X | X | X |
| W32 | Digital Demod IF Output (Flexible Coaxial) *(Option B7E)* | 8120-8866 | | X | X | X | X |
| W33 | Digital Demod DSP Sample Rate (Flexible Coaxial) *(Option B7D)* | 8120-8867 | | X | X | X | X |
| W34 | Digital Demod DSP IF (Flexible Cable) *(Option B7D)* | E4402-60027 | | X | X | X | X |
| W35 | Cable Assembly, Filtered Low Band RF Input (semi-rigid coaxial) *(Option UKB)* | E4403-20058 | | X | | | |
| | Cable Assembly, Filtered Low Band RF Input (semi-rigid coaxial) *(Option UKB)* | E4404-20026 | | | X | X | X |
| W36 | Cable Assembly, Filtered 600 MHz 2nd LO Drive (flexible cable) *(Option 120)* | E4402-60026[g] | | X | X | X | X |
| W37 | Cable Assembly, 600 MHz 2nd LO Drive (flexible cable) *(Option 120)* | E4402-60025[g] | | X | X | X | X |
| W38 | Cable Assembly, Ext Mixer LO OUT *(Option AYZ)* | E4404-20006 | | | | | X |
| W39 | Cable Assembly, Ext Mixer IF INPUT *(Option AYZ)* | 8120-5141 | | | | | X |
| W40 | Cable Assembly, 2nd Converter Out *(Option H55, H70)* | E4440-60411 | X | X | X | X | X |
| W41 | Cable Assembly, A7A12 321.4 MHz Out *(Option H55, H70)* | E4440-60411 | X | X | X | X | X |

**Table 5-4 Assembly Level Replaceable Parts**

| Reference Designator | Description | Agilent Part Number | E4401B/ E4411B | E4402B/ E4403B | E4404B | E4405B | E4407B/ E4408B |
|---|---|---|---|---|---|---|---|
| W42 | Cable Assembly, Downconverted IF Out *(Option H55, H70)* | E4440-60413 | X | X | X | X | X |

a. ESA-E Series (E4401B, E4402B, E4404B, E4405B, and E4407B only).
b. E4401-60343 includes E4401-60338 BAA ROM kit.
c. Requires Option B7E, (E4402B, E4404B, E4405B, and E4407B only).
d. Requires Option B7D, (E4402B, E4404B, E4405B, and E4407B only).
e. Serial prefix ≥ MY5014 & SG5014 added diode batches and epoxy to the driver board to reduce EMF spikes. The attenuator part number did not change.
f. Place adhesive on each end of cable connector and LCD connector to eliminate the risk of the cable unplugging.
g. ESA-E Series part (E4402B, E4404B, E4405B, and E4407B only)

**Figure 5-1 Front Frame with Hardware, E4411B, and E4401B**

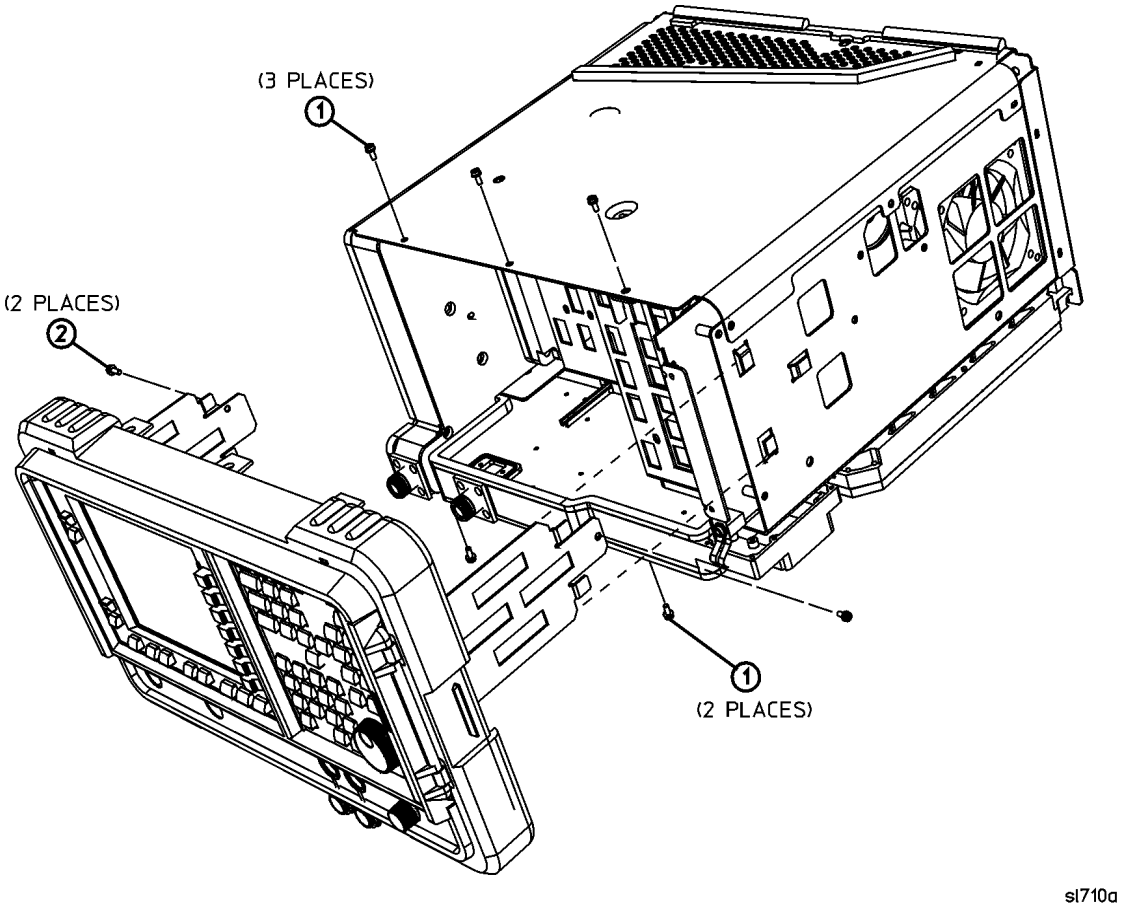


Table 5-5 provides a schematic reference designation, a description, and a part number for the items called out in Figure 5-1.

**Table 5-5**

| Item | Description | Part Number |
|---|---|---|
| 1 | Screw - M3 X 10 mm<br>(TORX Flat Head) | 0515-2600 |
| 2 | Screw - M3 X 8 mm<br>(TORX Pan Head with Crest Washer) | 0515-0372 |

**Figure 5-2** **Front Frame with Hardware, E4402B, E4403B, E4404B, E4405B, E4407B, and E4408B**

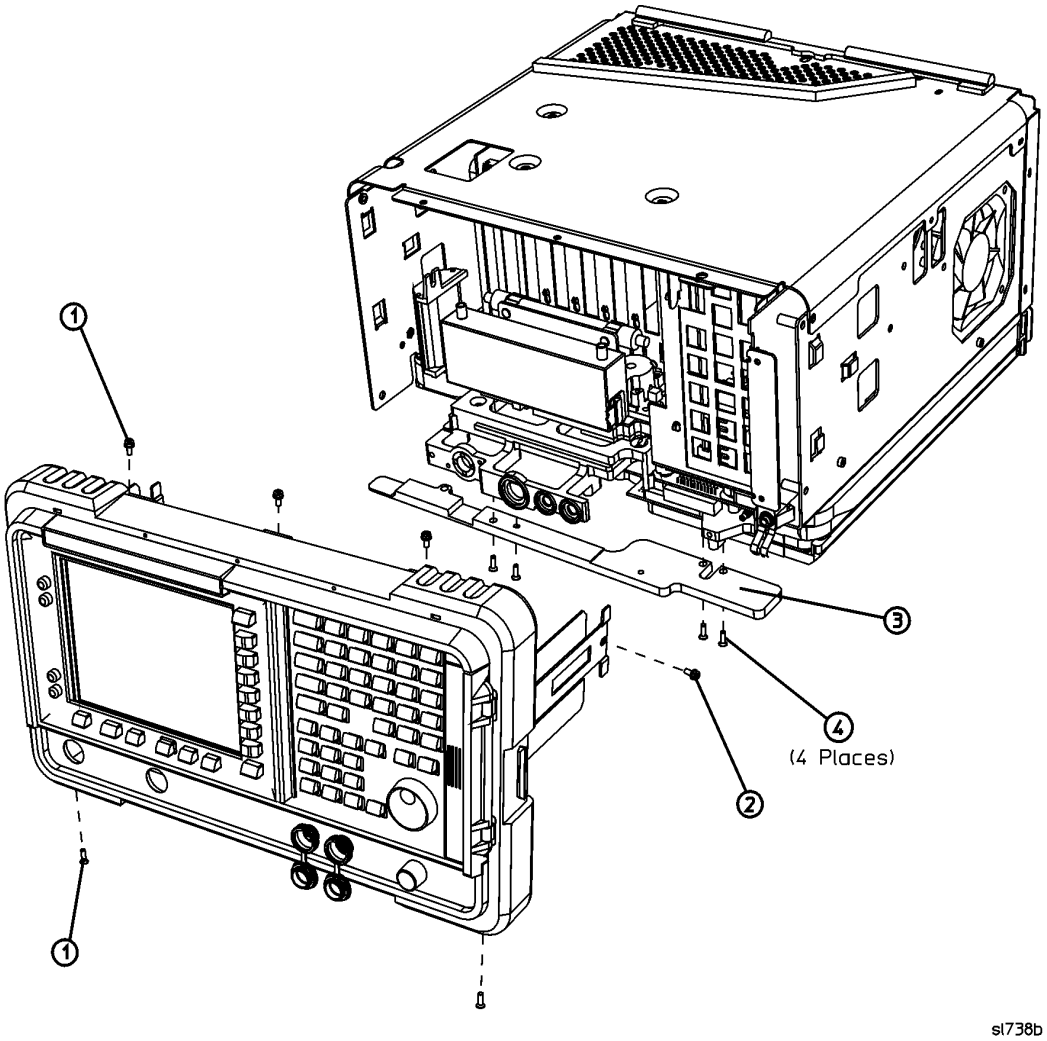


Table 5-6 provides a schematic reference designation, a description, and a part number for the items called out in Figure 5-2.

**Table 5-6**

| Item | Reference Designator | Description | Part Number |
|---|---|---|---|
| 1 | | Screw - M3 X 10 mm (TORX Flat Head) | 0515-2600 |
| 2 | | Screw - M3 X 8 mm (TORX Pan Head with Crest Washer) | 0515-0372 |
| 3 | A1A5 | Shock Spreader Assembly | E4403-60032 |
| 4 | | Screw - M4 X 12 mm | 0515-0943 |

**Figure 5-3 Front Panel Parts**

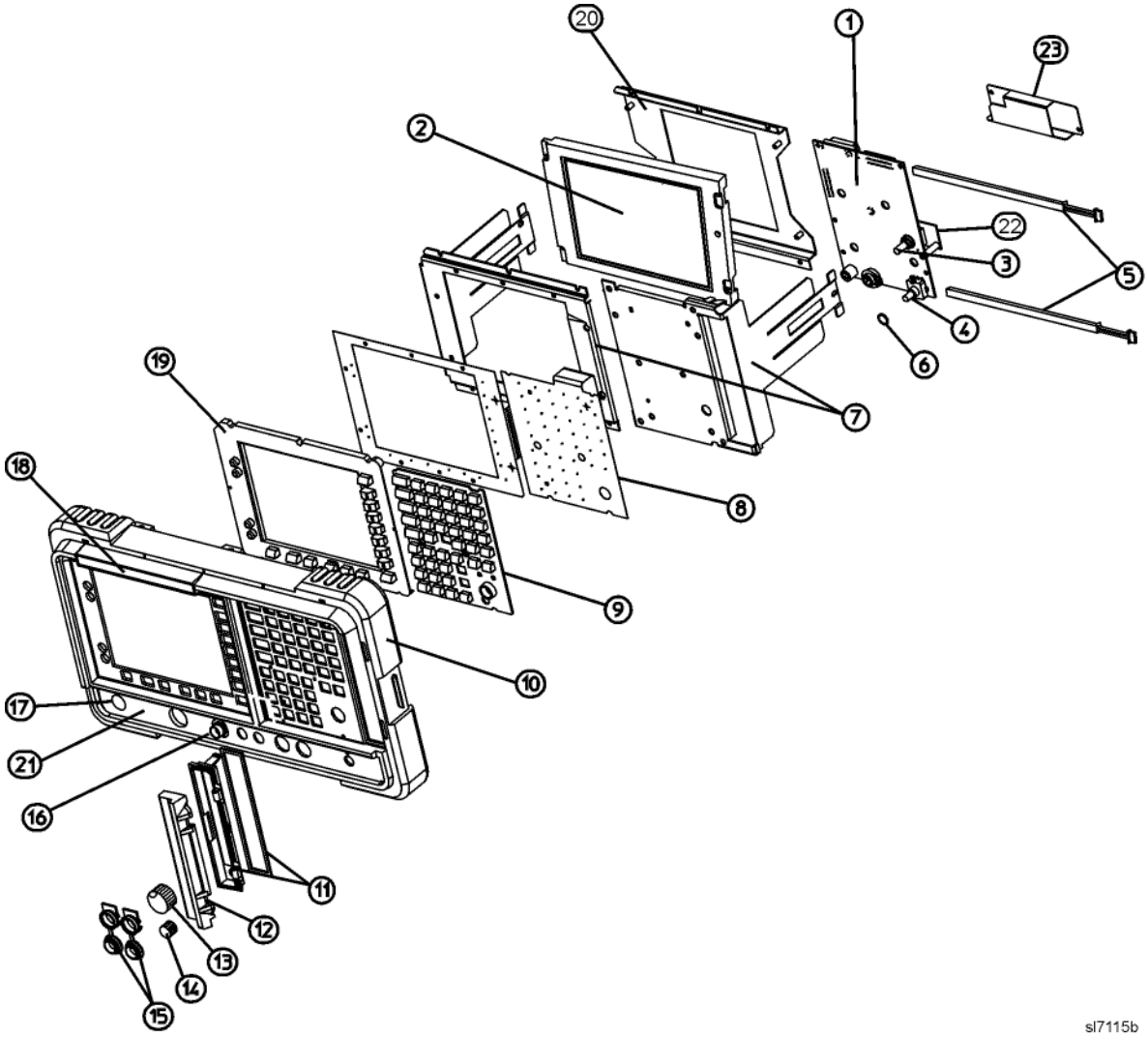


Table 5-7 provides a schematic reference designation, a description, and a part number for the items called out in Figure 5-3.

**Table 5-7**

| Item | Reference Designator | Description | Part Number |
|---|---|---|---|
| 1 | A1A1 | Front Panel Interface Assembly | E4401-60241 |
| 2 | A1A2 | Liquid Crystal Display Assembly Kit<br>(Serial Prefix ≥US4119)<br>(includes Backlights and Inverter Board) | E4401-60242 |
| | | Liquid Crystal Display Assembly Kits (one each required)<br>(Serial Prefix <US4119)<br>(includes Backlights and Inverter Board) | E4401-60241, and<br>E4401-60242 |
| 3 | A1A1A1 | Rotary Pulse Generator | 1990-1865 |
| 4 | A1A1A2 | Volume Rotary Pulse Generator | 0960-0892 |
| 5 | A1A2DS1<br>and A1A2DS2 | Display Backlights | E4401-60241 &<br>E4401-60242<br>2090-0380 |
| 6 | A1MP13 | Gasket–Volume RPG | E4401-20044 |
| 7 | A1MP3 | Sub Panel (2 pieces)<br>Front Panel Interface Board Subpanel<br>and LCD Subpanel | E4401-60104 |
| 8 | A1MP4 | Flex Circuit, Main | E4401-60198 |
| 9 | A1MP5 | Main Keypad | E4401-40002 |
| 10 | A1A3[a] | Front Frame Assembly *(except Option 060)* | E4401-60257 |
| | | Front Frame Assembly *(Option 060)* | E4401-60259 |
| 11 | A1MP12 | Media Bezel with Gasket | E4401-60197 |
| 12 | A1MP14 | Media Door | E4401-40004 |
| 13 | A1MP7 | RPG Knob | 0370-3229 |
| 14 | A1MP8 | Volume Knob | 0370-3230 |
| 15 | A1MP10 | Front Panel Connector Cover | E4401-40006 |
| 16 | A8A1W4 | Amptd Ref Out Connector | 5062-0721 |
| 17 | A1MP15 | Tracking Generator I/O Hole Plug | E4401-40020 |

**Table 5-7 (Continued)**

| Item | Reference Designator | Description | Part Number |
|---|---|---|---|
| 18 | A1MP16 | Nameplate 1.5 GHz (50 Ω)*(E4401B)* | E4401-80027 |
| | | Nameplate 1.5 GHz (75 Ω) *(E4401B)* | E4401-80028 |
| | | Nameplate 3.0 GHz *(E4402B) (except Option UKB)* | E4402-80002 |
| | | Nameplate 3.0 GHz *(E4402B) (Option UKB)* | E4403-80016 |
| | | Nameplate 3.0 GHz *(E4403B)* | E4403-80008 |
| | | Nameplate 6.7 GHz *(E4404B) (except Option UKB)* | E4404-80004 |
| | | Nameplate 6.7 GHz *(E4404B) (Option UKB)* | E4404-80008 |
| | | Nameplate 13.2 GHz *(E4405B) (except Option UKB)* | E4405-80003 |
| | | Nameplate 13.2 GHz *(E4405B) (Option UKB)* | E4405-80006 |
| | | Nameplate 26.5 GHz *(E4407B) (except Option UKB)* | E4407-80003 |
| | | Nameplate 26.5 GHz *(E4407B) (Option UKB)* | E4407-80006 |
| | | Nameplate 26.5 GHz *(E4408B)* | E4408-80003 |
| | | Nameplate 1.5 GHz *(E4411B)* (50 Ω) | E4411-80012 |
| | | Nameplate 1.5 GHz *(E4411B)* (75 Ω) | E4411-80013 |
| 19 | A1A3MP9 | Lens/Keypad Assembly (50 Ω) | E4401-60127 |
| | | Lens/Keypad Assembly (50 Ω) *(Option 060)* | E4401-60256 |
| 20 | A1A2MP1 | LCD Bracket | E4401-00034 |

**Table 5-7 (Continued)**

| Item | Reference Designator | Description | Part Number |
|---|---|---|---|
| 21 | A1A2MP21 | Connector Label, 1.5 GHz (50 Ω) *(E4401B, E4411B)* | E4401-80003 |
| | | Connector Label, 1.5 GHz (75 Ω) *(E4401B, E4411B)* | E4401-80002 |
| | | Connector Label, 3 GHz *(except Option UKB) (E4402B, E4403B)* | E4403-80002 |
| | | Connector Label, 3 GHz *(Option UKB) (E4402B)* | E4403-80015 |
| | | Connector Label, 6.7 GHz *(except Option UKB) (E4404B)* | E4404-80001 |
| | | Connector Label, 6.7 GHz *(Option UKB) (E4404B)* | E4404-80007 |
| | | Connector Label, 13.2 GHz *(except Option UKB) (E4405B)* | E4405-80001 |
| | | Connector Label, 13.2 GHz *(Option UKB) (E4405B)* | E4405-80005 |
| | | Connector Label, 26.5 GHz *(E4407B, E4408B)* | E4407-80001 |
| | | Connector Label, 26.5 GHz *(Option AYZ) (E4407B)* | E4407-80005 |
| | | Connector Label, 26.5 GHz *(Option UKB) (E4407B)* | E4407-80007 |
| | | Connector Label, 26.5 GHz *(Option UKB and AYZ) (E4407B)* | E4407-80008 |
| 22 | A1A2A2 | Backlight Inverter Board | 0950-3644 |
| 23 | A1A1MP1 | Backlight Inverter Board Shield | E4401-00046 |

a. Front Frame Assembly also includes the following:
Front Frame
Main Keypad Label (the piece around the outside of the keys)
Media Bezel with Gasket *(see A1MP12)*
Media Door *(see A1MP14)*
Front Panel Connector Cover *(see A1MP10)*
Tracking Generator I/O Hole Plug *(see A1MP15)*
RF Input Connector Gasket (see A1MP18)
Tracking Generator Output Connector Gasket (see A1MP19)
Amptd Ref Out/Ext Mixer Gasket *(E4402B, E4403B, E4404B, E4405B, E4407B, E4408B)* (see A1MP20)
Lens/keypad assembly (see A1A3MP9)
Grounding Clip (see A1MP17)

**Figure 5-4 Rear Frame with Hardware**

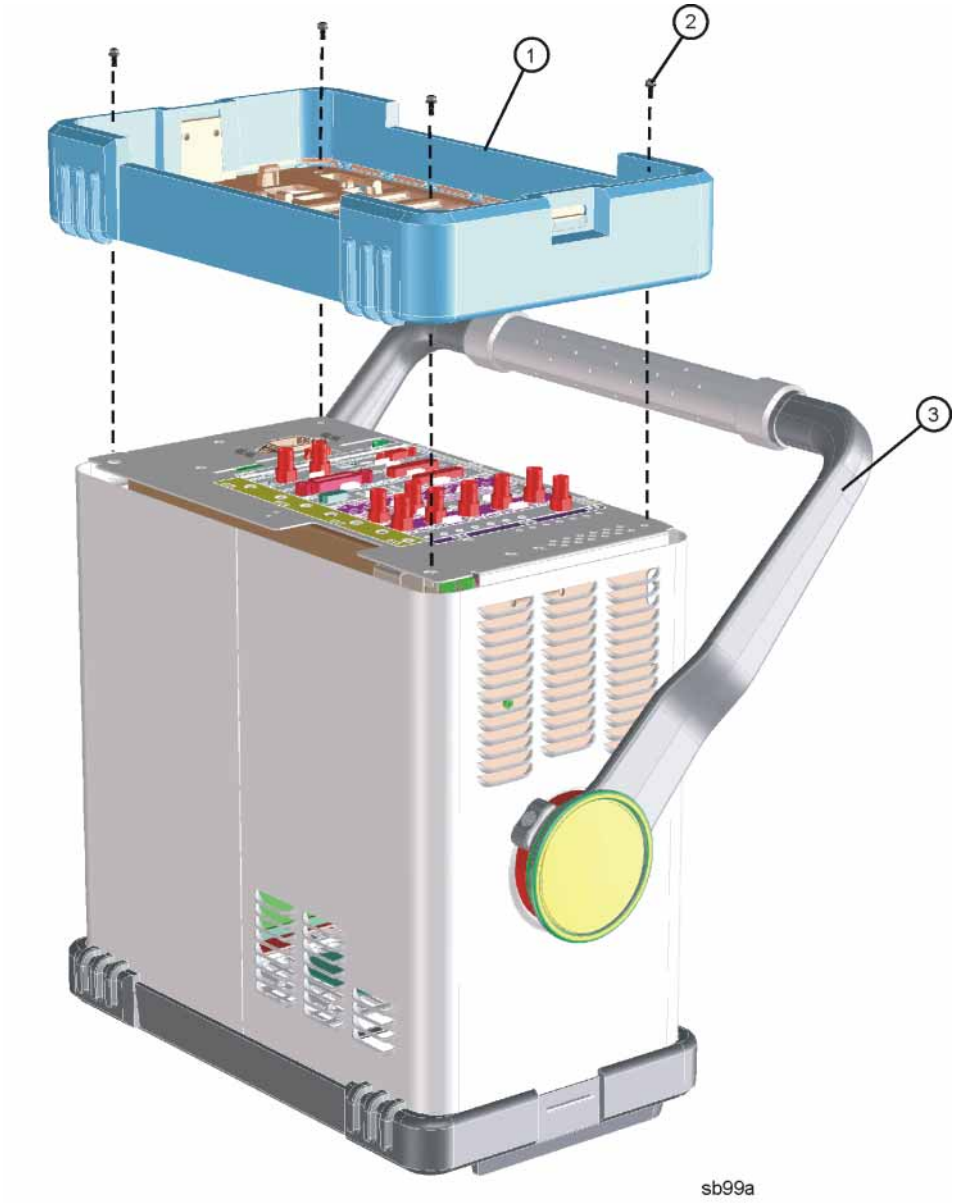

Table 5-8 provides a schematic reference designation, a description, and a part number for the items called out in Figure 5-4.

**Table 5-8**

| Item | Reference Designator | Description | Part Number |
|---|---|---|---|
| 1 | A1A4 | Rear Frame Assy | E4401-60160 |
| 2 | | Screw–M4 X 12 mm *(4 required)* (TORX Pan Head with Crest Washer) | 0515-0382 |
| 3 | | Handle assembly | E4401-60246 |

**Figure 5-5 Front Panel with Hardware**

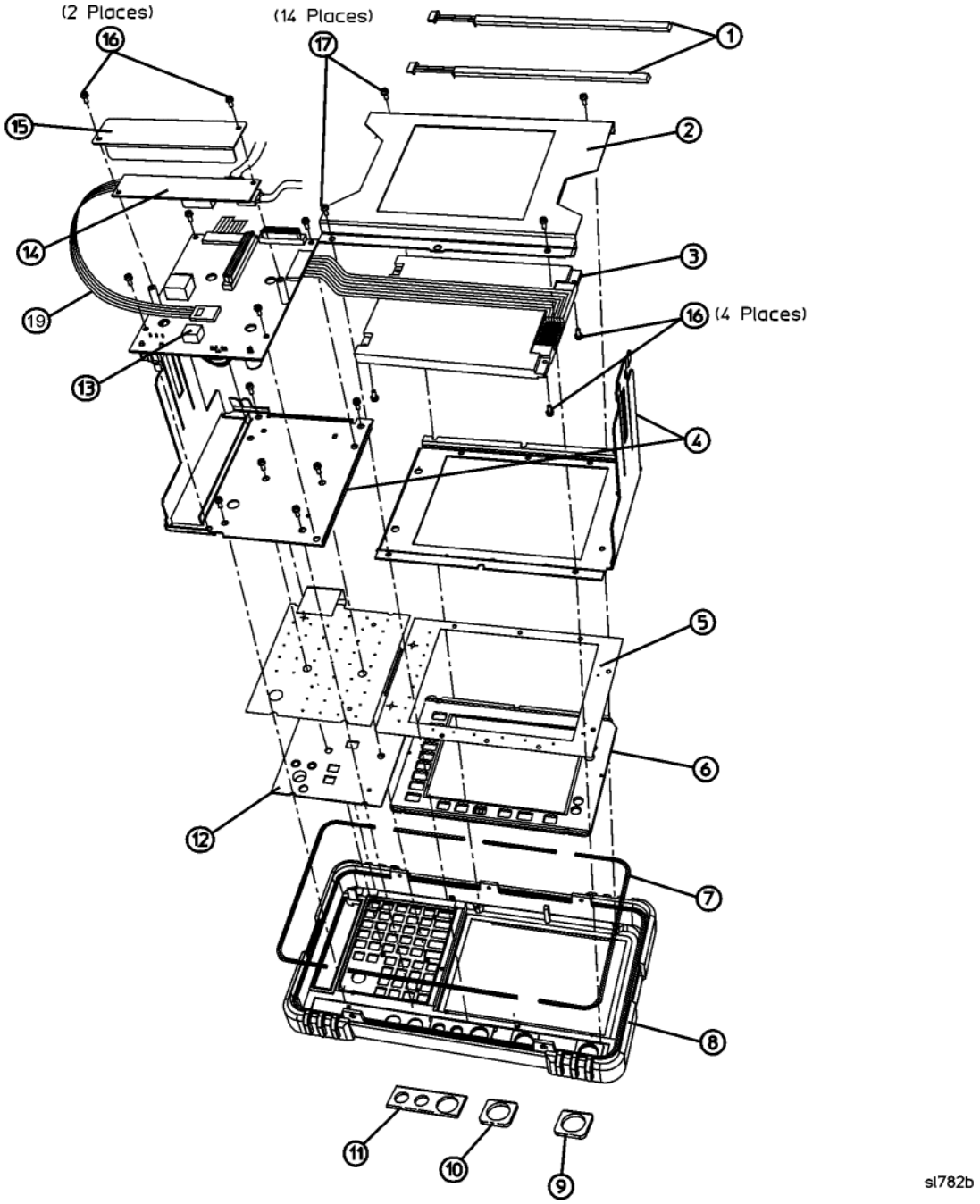


Table 5-9 provides a schematic reference designation, a description, and a part number for the items called out in Figure 5-5.

**Table 5-9**

| Item | Reference Designator | Description | Part Number |
|---|---|---|---|
| 1 | A1A2DS1 and A1A2DS2 | Display Backlights | E4401-60241 & E4401-60242 2090-0380 |
| 2 | A1A2MP1 | LCD Bracket | E4401-00034 |
| 3 | A1A2 | Liquid Crystal Display Assembly Kit (Serial Prefix ≥US4119) (includes Backlights and Inverter Board) | E4401-60242 |
| | | Liquid Crystal Display Assembly Kits (one each required) (Serial Prefix <US4119) (includes Backlights and Inverter Board) | E4401-60241 (A1A1), and E4401-60242 |
| 4 | A1MP3 | Sub Panel (2 pieces) Front Panel Interface Board Subpanel and LCD Subpanel | E4401-60104 |
| 5 | A1MP4 | Flex Circuit, Main | E4401-60198 |
| 6 | A1A3MP9 | Lens/Keypad Assembly *(except Option 060)* | E4401-60127 |
| | | Lens/Keypad Assembly, *(Option 060)* | E4401-60256 |
| 7 | A1MP17 | Grounding Clip Kit (5 pieces) | E4401-00054 |
| 8 | A1A3 | Front Frame Assembly *(except Option 060)* | E4401-60257 |
| | | Front Frame Assembly *(Option 060)* | E4401-60259 |
| 9 | A1MP18 | RF Input Connector Gasket | E4403-20046 |
| 10 | A1MP19 | TG Output Connector Gasket | E4403-20046 |
| 11 | A1MP20 | Amptd Ref Out/Ext Mixer Gasket | E4401-20089 |
| 12 | A1MP5 | Main Keypad | E4401-40002 |
| 13 | A1A1 | Front Panel Interface Board Assy | E4401-60241 |
| 14 | A1A2A2 | Backlight Inverter Board for 2090-0379 | 0950-3644 |
| 15 | A1A1MP1 | Backlight Inverter Board Shield | E4401-00046 |
| 16 | | Screws - M2.5 X 6 *(6 required)* (TORX Pan Head) | 0515-0366 |
| 17 | | Screws - M3 X 8 mm *(14 required)* (TORX Pan Head with Crest Washer) | 0515-0372 |
| 18 | A1MP13 | Gasket - Volume RPG | E4401-20044 |
| 19 | A1A1W1 | Cable, Backlight Inverter Board to Front Panel Interface Board | 8120-8482 |

**Figure 5-6 Inner Shield with Hardware**

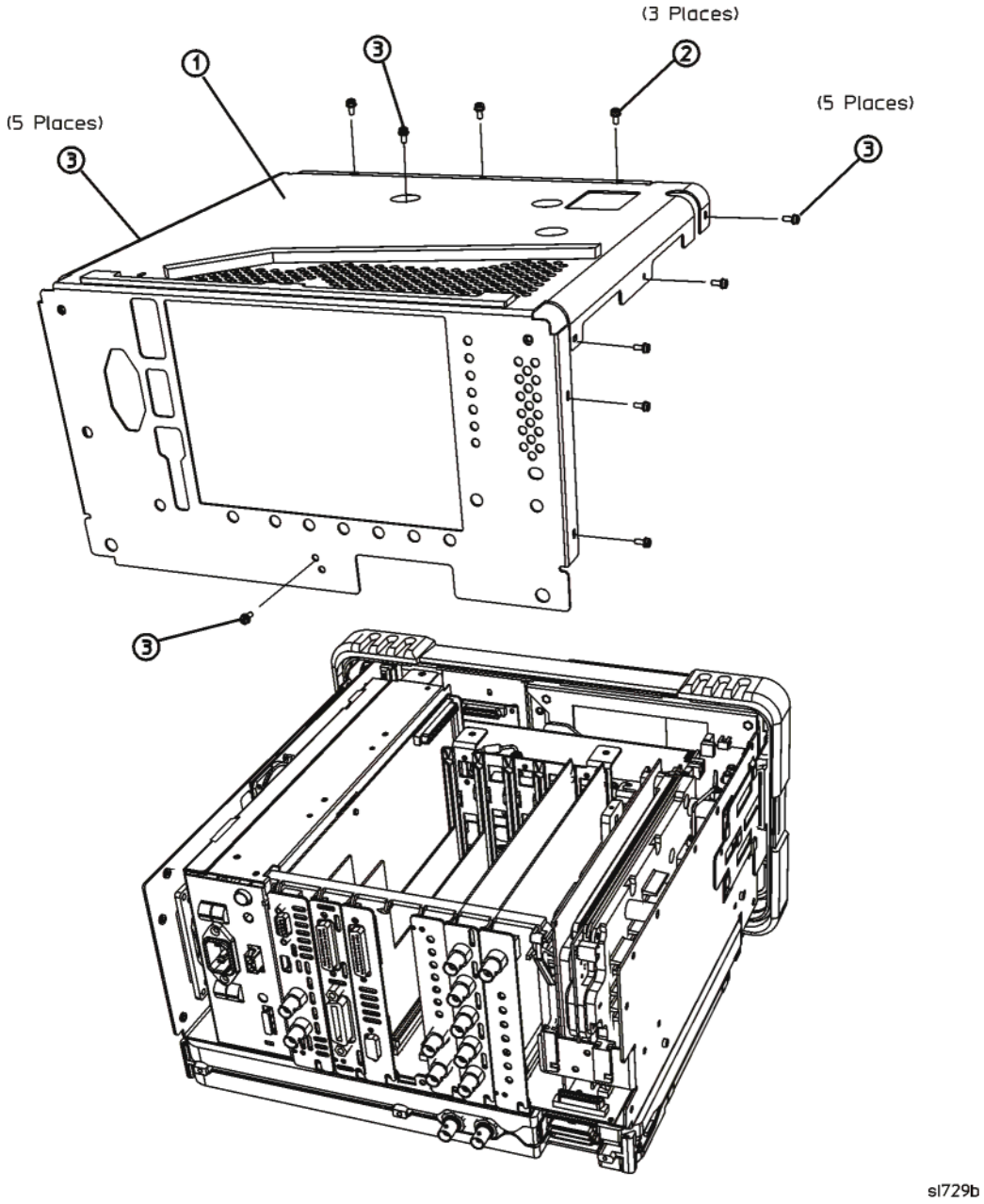


Table 5-10 provides a schematic reference designation, a description, and a part number for the items called out in Figure 5-6.

**Table 5-10**

| Item | Reference Designator | Description | Part Number |
|---|---|---|---|
| 1 | MP1 | Chassis Cover (Inner Shield) | E4401-00067 |
| 2 | | Screw - M3 X 10 mm *(3 required)*<br>(TORX Flat Head) | 0515-2600 |
| 3 | | Screw - M3 X 8 mm *(12 required)*<br>(TORX Pan Head with Crest Washer) | 0515-0372 |

**Figure 5-7 Motherboard Hardware**

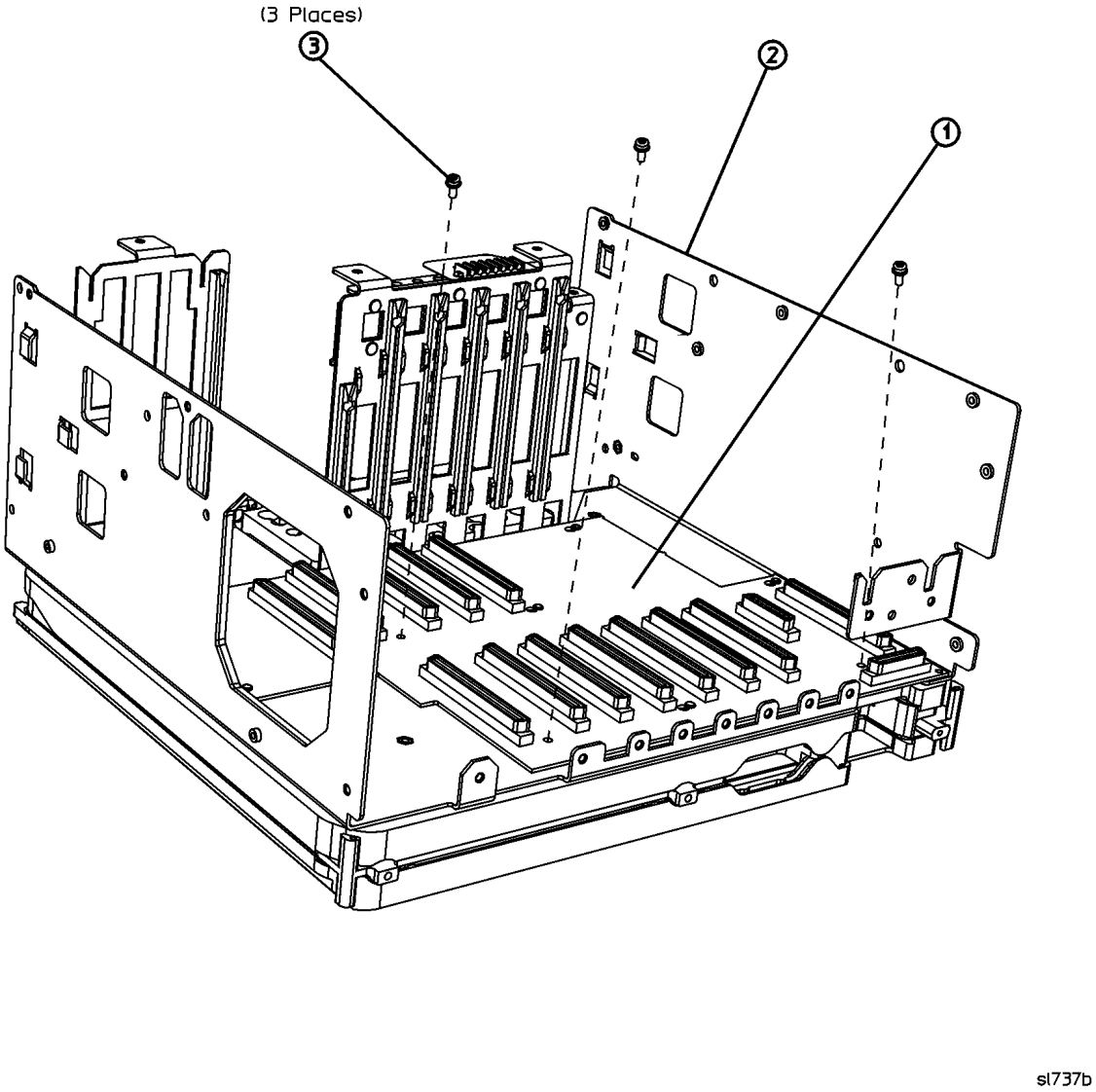


Table 5-11 provides a schematic reference designation, a description, and a part number for the items called out in Figure 5-7.

**Table 5-11**

| Item | Reference Designator | Description | Part Number |
|---|---|---|---|
| 1 | A7 | Motherboard, ESA-E Series (shown here) | E4401-60107 |
| | | Motherboard, ESA-L Series | E4411-60013 |
| 2 | MP6 | Chassis | E4401-00045 |
| 3 | | Screw - M3 X 8 mm (TORX Pan Head with Crest Washer) | 0515-0372 |

**Figure 5-8 Rear Panel with Hardware**

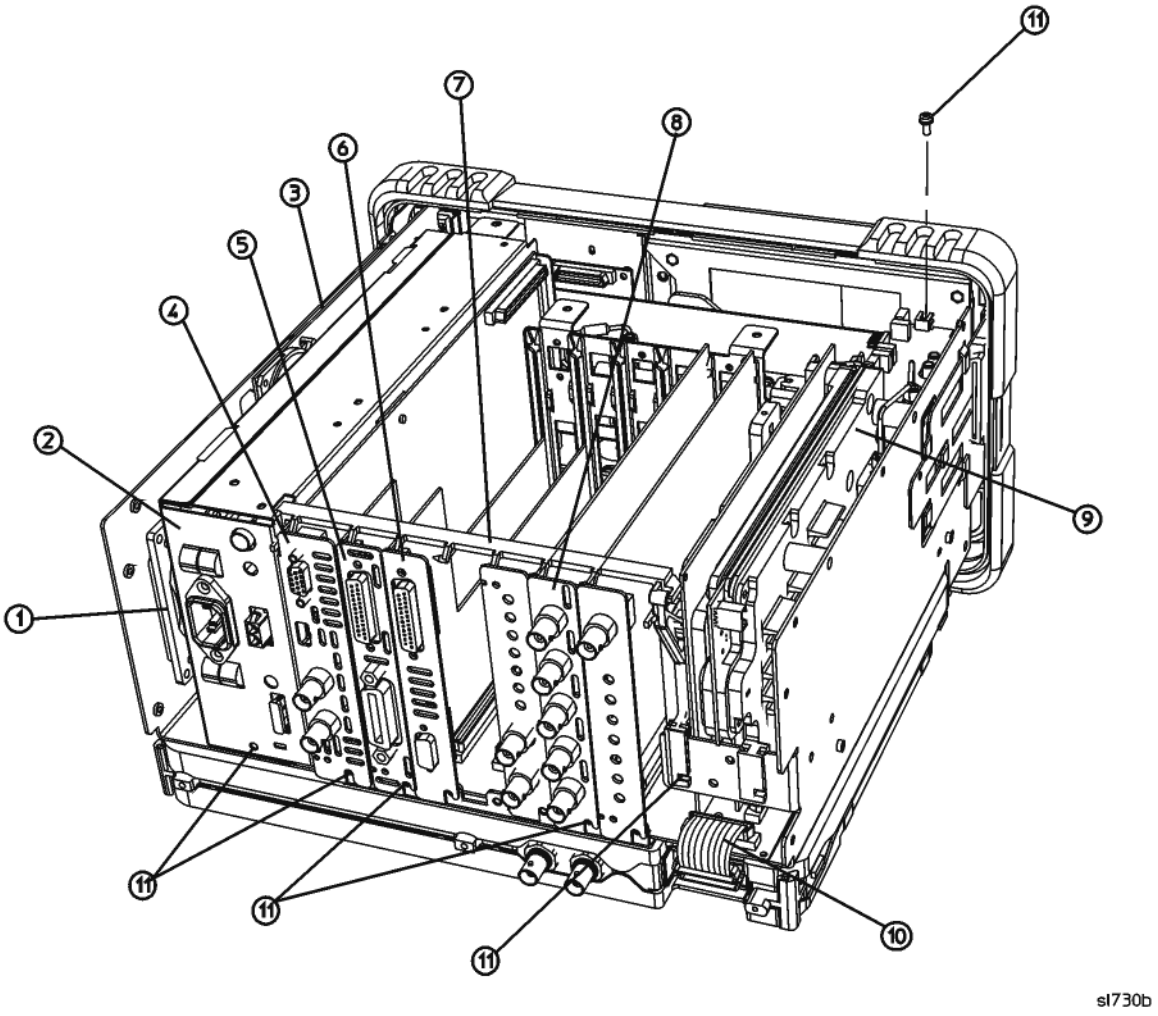


Table 5-12 provides a schematic reference designation, a description, and a part number for the items called out in Figure 5-8.

**Table 5-12**

| Item | Reference Designator | Description | Part Number |
|---|---|---|---|
| 1 | A5B1 | Fan | 3160-0866 |
| 2 | A5 | Power Supply Assy | E4401-60222 |
| 3 | A6 | Speaker/Floppy Assembly | E4401-60008 |
| 4 | A4 | Main Processor Board | E4401-60233 |
| | | Main Processor Board with Enhanced Memory | E4401-60233 |
| 5 | A7A2 | GPIB Board Assembly, *(Option A4H)* | E4401-60367 |
| 6 | A7A3 | RS 232 Assembly, *(Option 1AX)* | E4401-60366 |
| Not shown | MP8 | Rear Blank Panels | E4401-00059 |
| 7 | MP7 | Vibration Support Bar | E4401-40026 |
| 8 | A7A1 | IF Video Sweep Ports, *(Option A4J)* | E4401-60096 |
| 9 | A2 | Tracking Generator Assembly<br>1.5 GHz 50 Ω, *(Option 1DN)* | E4401-60128 |
| | | Tracking Generator Assembly<br>1.5 GHz 75 Ω, *(Option 1DQ)* | E4401-60129 |
| 10 | W4 | RF Power and Control Ribbon Cable,<br>*A7J4 to A8A1A1P6 & A8A1A2J1 (E4402B, E4403B, E4404B, E4405B, E4407B, E4408B)* | E4403-60018 |
| | | RF Power and Control Ribbon Cable, *A7J4 to A8J4 (E4401B and E4411B)* | 8120-6943 |
| 11 | | Screw - M3 X 8 mm *(10 required)*<br>(TORX Pan Head with Crest Washer) | 0515-0372 |

**Figure 5-9 Speaker/Floppy Board with Hardware**

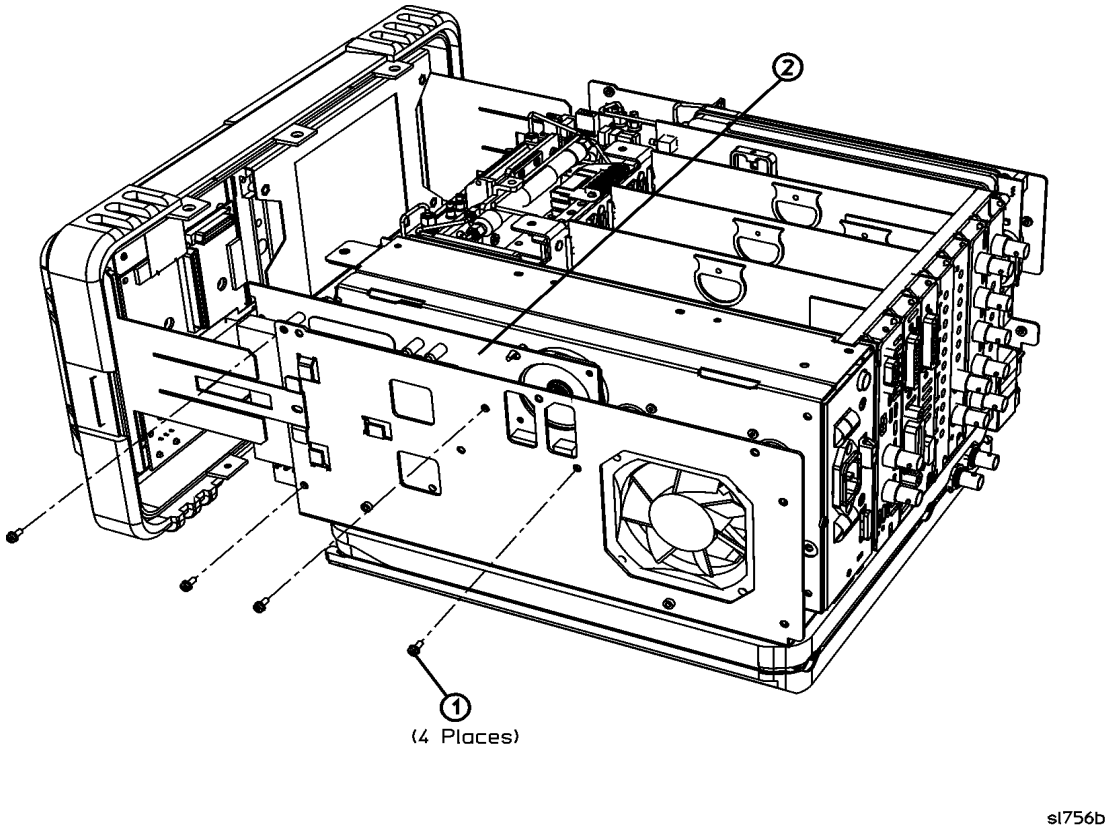


Table 5-13 provides a schematic reference designation, a description, and a part number for the items called out in Figure 5-9.

**Table 5-13**

| Item | Reference Designator | Description | Part Number |
|---|---|---|---|
| 1 | | Screw - M3 X 8 mm *(4 required)*<br>(TORX Pan Head with Crest Washer) | 0515-0372 |
| 2 | A6 | Speaker/Floppy Assembly | E4401-60368 |

**Figure 5-10 RF Assembly with Hardware, E4401B and E4411B**

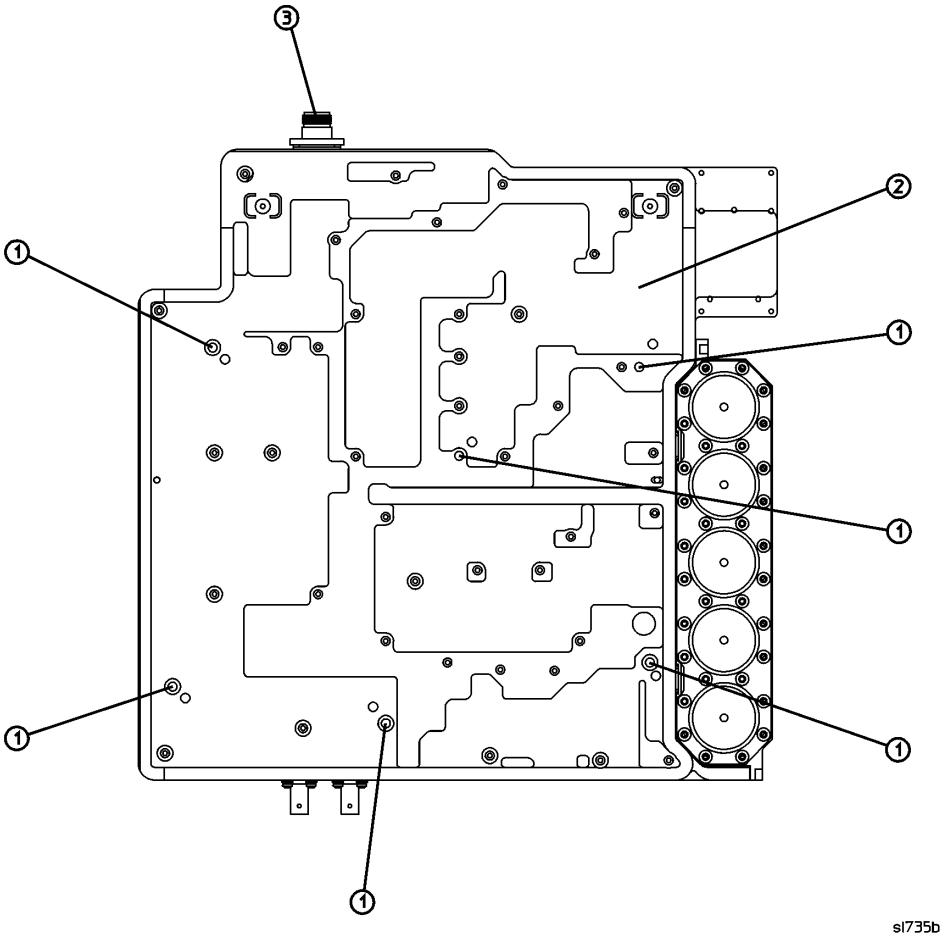


Table 5-14 provides a schematic reference designation, a description, and a part number for the items called out in Figure 5-10.

**Table 5-14**

| Item | Reference Designator | Description | Part Number |
|---|---|---|---|
| 1 | | Screw - M3 X 25 mm *(6 required)* (TORX Pan Head with Crest Washer) | 0515-0667 |
| 2 | A8 | 1.5 GHz RF Assembly, 50 Ω | E4401-60402 |
| | | 1.5 GHz RF Exchange Assembly, 50 Ω | E4401-69294 |
| | | 1.5 GHz RF Assembly, 75 Ω, *(Option 1DP)* | E4401-60100 |
| 3 | A8J10 | RF Input Type-N Connector, 50 Ω | 1250-2514 |
| | | RF Input BNC Connector, 75 Ω | 1250-2792 |

**Figure 5-11 RF Input Connector Hardware (E4401B and E4411B) and Precision Frequency Reference, Option 1D5 (E4401B)**

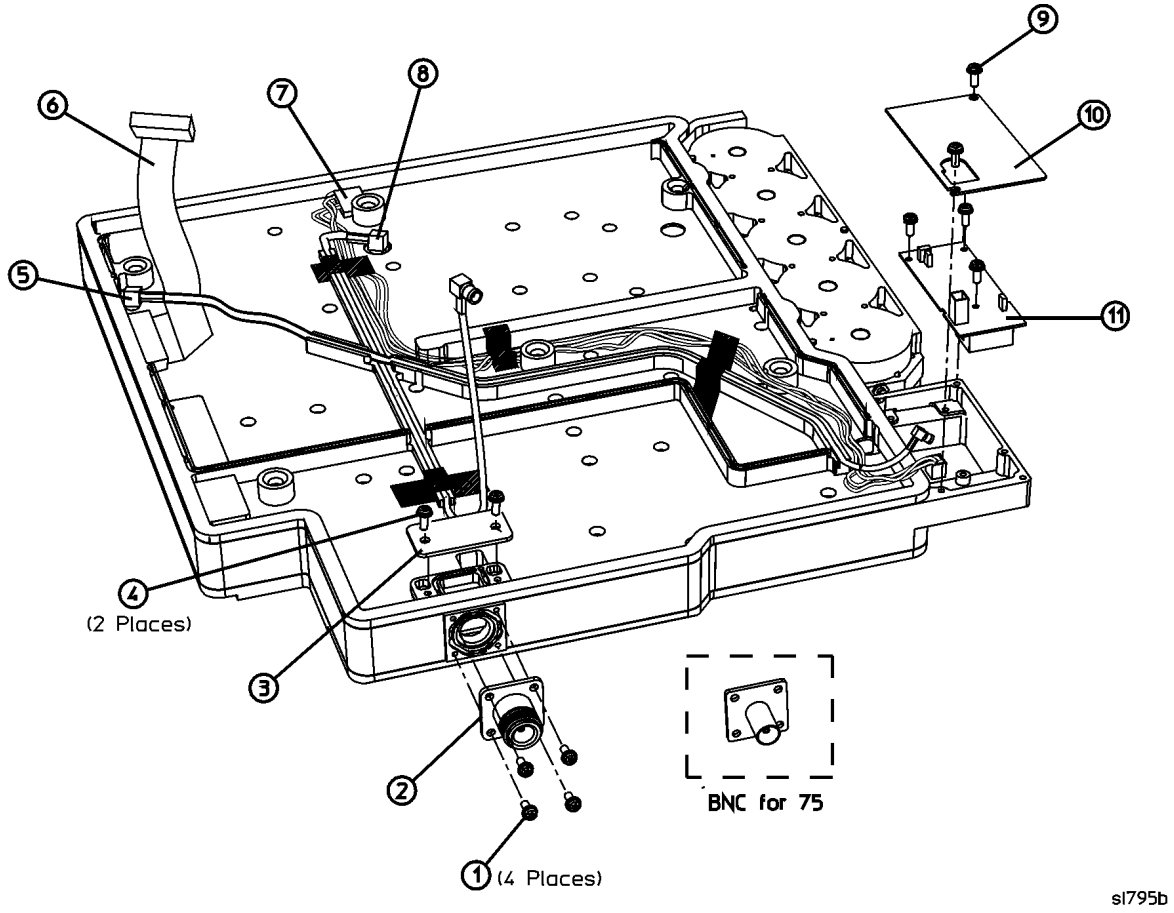


Table 5-15 provides a schematic reference designation, a description, and a part number for the items called out in Figure 5-11.

**Table 5-15**

| Item | Reference Designator | Description | Part Number |
|---|---|---|---|
| 1 | | Screw - M2.5 X 8 mm (TORX Flat Head) *(4 required)* | 0515-2487 |
| 2 | A8J10 | Connector, Type-N (50 Ω) | 1250-2514 |
| | | Connector, BNC (75 Ω) | 1250-2792 |
| 3 | A8MP15 | 1.5 GHz RF Input Connector Cover | E4401-00021 |
| 4 | | Screw - M3 X 8 mm (TORX Pan Head with Crest Washer) *(2 required)* | 0515-0372 |
| 5 | W26 | Precision Frequency Reference Cable, Flexible Coax, *A8A1 to A8 (E4401B)* | 8120-5024 |
| 6 | W4 | Cable Assembly, RF Power and Control, Ribbon Cable *(E4401B)* | 8120-6943 |
| 7 | W25 | Precision Frequency Reference Power Harness, *A8A1 to A8(E4401B)* | E4401-60043 |
| 8 | W2 | 21.4 MHz IF Input Coax *A8J3 to A3J2* | 8120-6153 |
| 9 | | Screws, M3 X 8 mm *(5 required)* | 0515-0372 |
| 10 | | Precision Frequency Reference Cover Shield *(E4401B)* | E4401-00055 |
| 11 | A8A1 | A8A1.5 GHz Precision Frequency Reference Assembly, *(Option 1D5) (E4401B)* | E4401-60036 |

**Figure 5-12** **3 GHz RF Assembly with Hardware, E4402B, E4403B, E4404B, E4405B, E4407B, and E4408B**

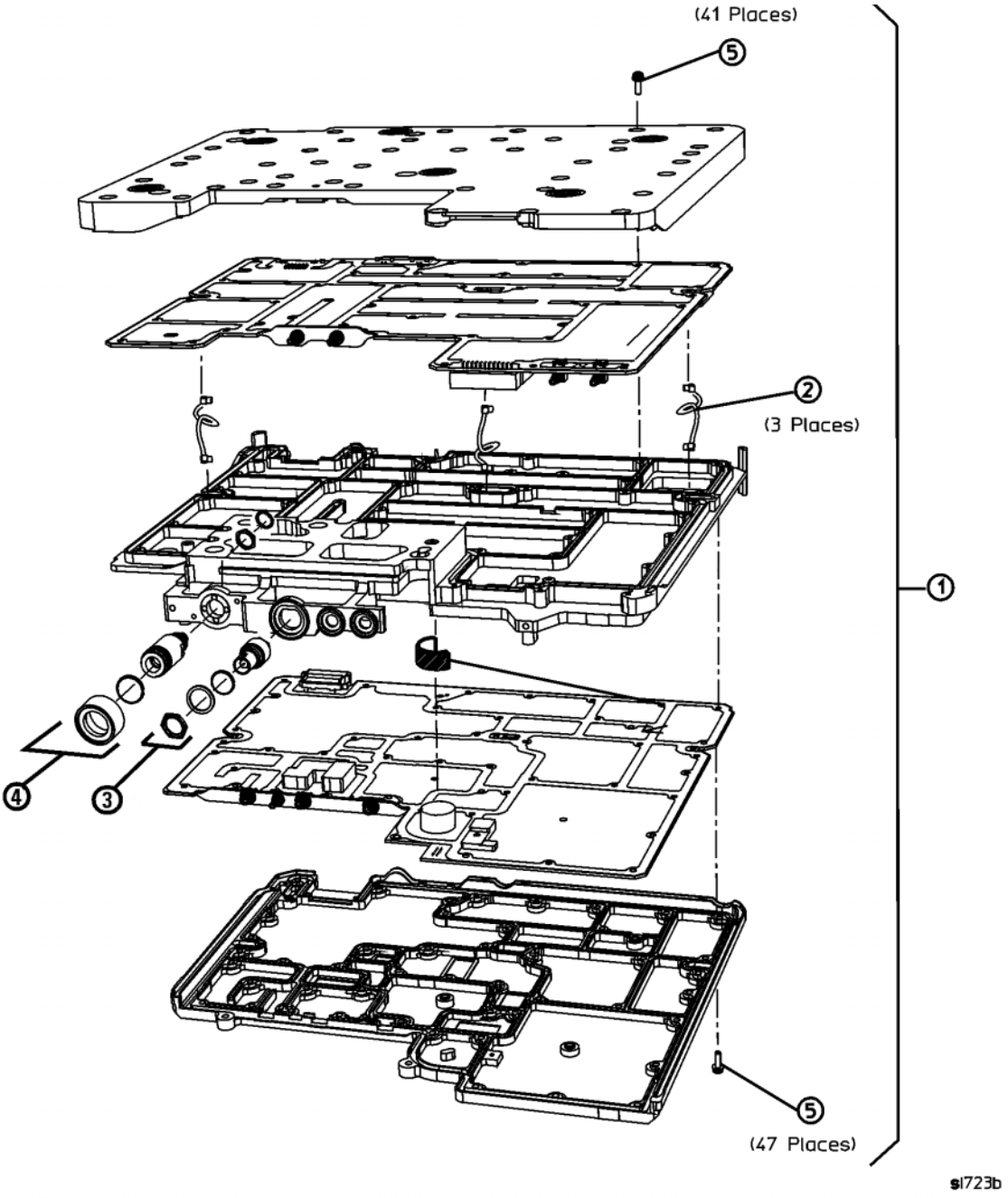


Table 5-16 provides a schematic reference designation, a description, and a part number for the items called out in Figure 5-12.

**Table 5-16**

| Item | Reference Designator | Description | Part Number |
|---|---|---|---|
| 1 | A8A1 | 3 GHz RF Complete Assy<br>with Precision Frequency Reference | E4403-60087 |
| 2 | A8A1W1 | 50 MHz Cal Signal Cable, Braided Coax<br>*A8A1A2J7 to A8A1A1J1* | E4403-60020 |
| | A8A1W2 | 600 MHz Reference Cable, Braided Coax<br>*A8A1A1J5 to A8A1A2J8* | |
| | A8A1W3 | 21.4 MHz Cal Signal Cable, Braided Coax<br>*A8A1A2J6 to A8A1A1J6* | |
| 3 | A8A1W4 | 50 MHz External Amptd Ref Out Signal Cable Connector<br>*A8A1A2J4 to A8J2* | 5062-0721 |
| | | SMB/BNC Amptd Ref Cable | 5062-0721 |
| | | O-Ring | 0900-0016 |
| | | Flat Washer | 2190-0119 |
| | | Hex Nut | 2950-0035 |

**Table 5-16 (Continued)**

| Item | Reference Designator | Description | Part Number |
|---|---|---|---|
| 4 | A8J1<br><br>shown here | Type-N RF Input Connector Kit (50 Ω)<br>*(except Option 060)* | E4403-60015 |
| | | Type-N Connector | |
| | | Lock Washer | |
| | | Hex Nut | |
| | | Sleeve | |
| | | EMI O-Ring | |
| | A8J1 | Type-N RF Input Connector *(Option 060)* | |
| | | Type-N Connector | 86290-60005 |
| | | Lock Washer | 2190-0104 |
| | | Hex Nut | 2950-0132 |
| | | Wavy Washer | 3050-2127 |
| | | Type-N Spacer | 5022-6164 |
| | | Conductive Washer | E4402-20010 |
| | A8J1 | RF Input APC-3.5 Connector Kit,<br>*(Option BAB) (E4407B, E4408B)* | E4407-60002 |
| | | Connector | |
| | | Block | |
| | | Nut | |
| | | M3 X 18 Flathead Torque Screw *(2 required)* | |
| 5 | | SMM3 X 14 mm Screws *(88 required)* | 0515-2994 |

**Figure 5-13** **RF Major Assemblies and Cables, Rear View, E4402B and E4403B**

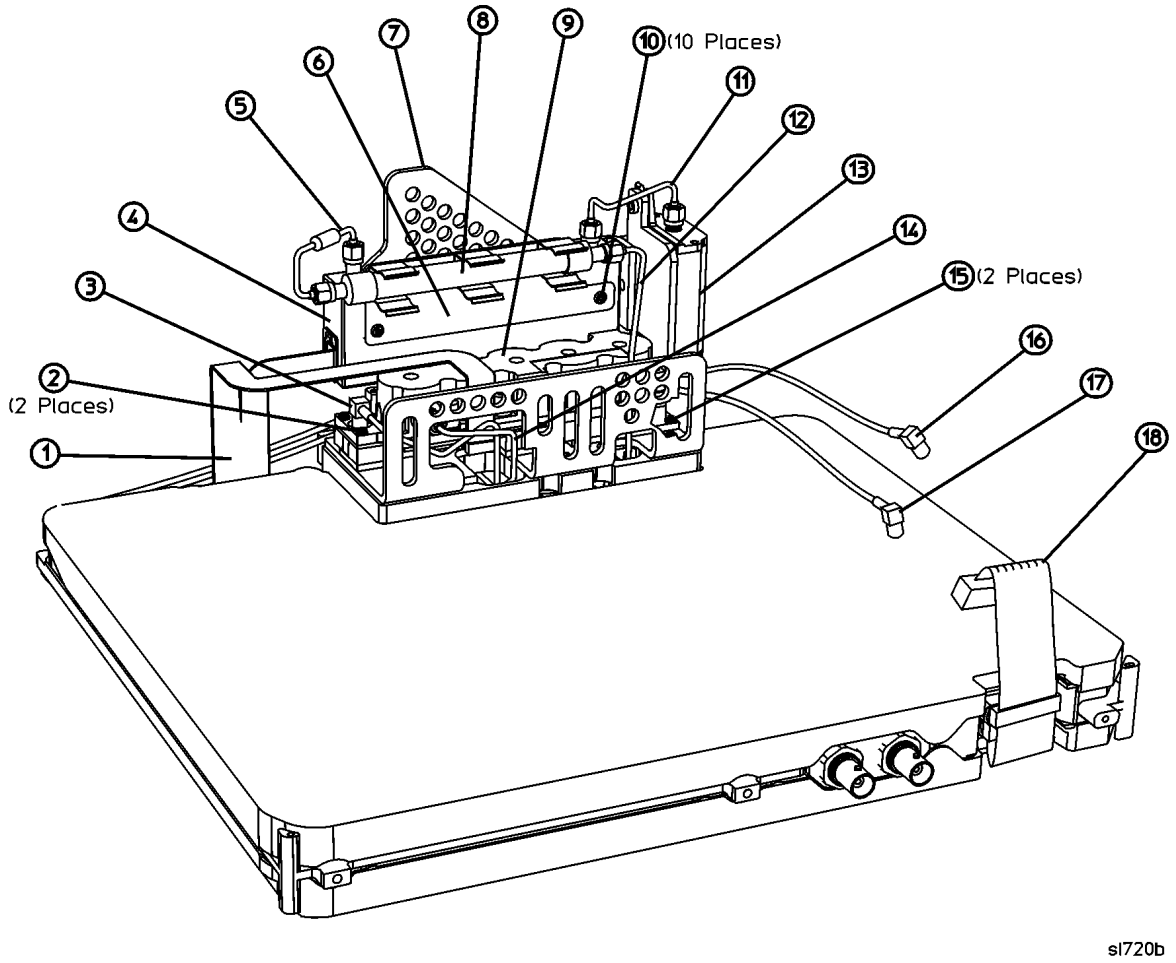


Table 5-17 provides a schematic reference designation, a description, and a part number for the items called out in Figure 5-13.

**Table 5-17**

| Item | Reference Designator | Description | Cable Runs | | Part Number |
|---|---|---|---|---|---|
| | | | From | To | |
| 1 | W5 | Attenuator and 2nd Converter Power and Control, Ribbon Cable | A8A1A1J2 | A8A5J3 and A8A2J6 | E4403-60019 |
| 2 | | Screws - M3 X 22 mm *(2 required)* (TORX Pan Head with Crest Washer) | | | 0515-2693 |
| 3 | W11 | 2nd Converter 321.4 MHz IF Output Cable, Flexible Coax | A8A2J2 | A8A1A1P2 | 8120-8674 |

**Table 5-17 (Continued)**

| Item | Reference Designator | Description | Cable Runs | | Part Number |
|---|---|---|---|---|---|
| | | | From | To | |
| 4 | A8A5 | 3 GHz Input Attenuator | | | 33321-60051 |
| 5 | W15 | RF Attenuator Output, Semi-rigid Coax | A8A5J2 | A8FL1J2 | E4403-20027 |
| 6 | A8MP5 | Filter Bracket | | | E4403-00007 |
| 7 | A8MP4 | Attenuator Bracket | | | E4403-00001 |
| 8 | A8FL1 | 3.1 GHz Low Pass Filter | | | 0955-0988 |
| 9 | A8A2 | Second Converter | | | 5086-7958 |
| 10 | | Screws - M3 X 10 mm *(10 required)* (TORX Pan Head with Crest Washer) | | | 0515-0372 |
| 11 | W14 | DC Blocked RF Input Cable, Semi-rigid Coax | A8A3J2 | A8A5J1 | E4403-20030 |
| 12 | W8 | Filtered Low Band RF Input Cable, Semi-rigid Coax | A8FL1J1 | A8A1A2J2 | E4403-20028 |
| 13 | A8A3 | dc Filter Block | | | E4403-20026 |
| 14 | W9 | 3.9 GHz IF Cable, Semi-rigid Coax | A8A1A2J3 | A8A2J1 | E4403-20029 |
| 15 | | Screws - M3 X 10 mm *(2 required)* (TORX Pan Head with Crest Washer) | | | 0515-2134 |
| 16 | W2 | 21.4 MHz IF, RF to IF Cable, Flexible Coax | A8A1A1P5 | A3J2 | 8120-6153 |
| 17 | W12 | 600 MHz Tracking Generator Drive Cable, Flexible Coax, *(Option 1DN)* | A8A1A1P3 | A2A2J5 | E4402-60022 |
| 18 | W4 | RF Power & Control Cable, 40-pin Ribbon Cable | A7J4 | A8A1A1P6 and A8A1A2J1 | E4403-60018 |

**Figure 5-14 Microwave RF Major Assemblies, E4404B, E4405B, E4407B and E4408B**

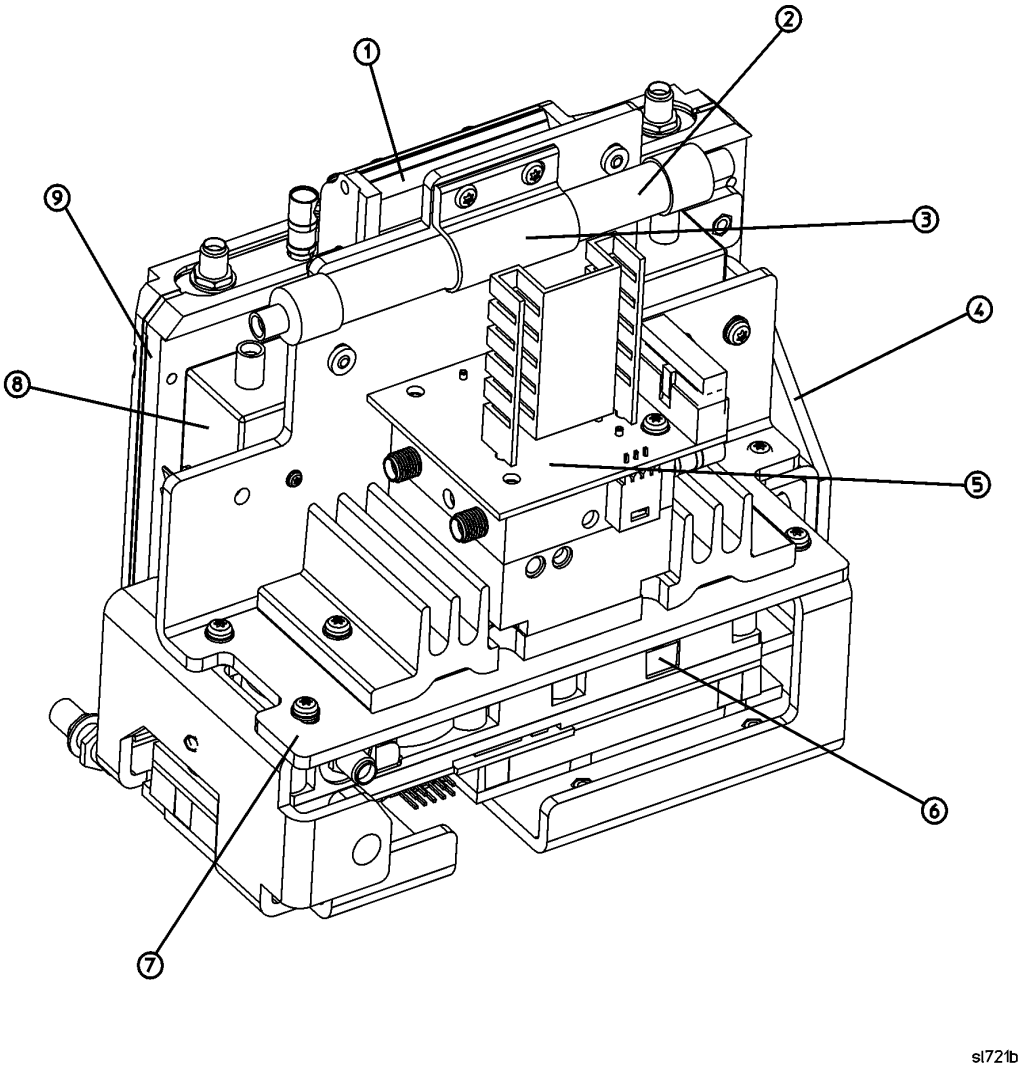


Table 5-18 provides a schematic reference designation, a description, and a part number for the items called out in Figure 5-14.

**Table 5-18**

| Item | Reference Designator | Description | Part Number |
|---|---|---|---|
| 1 | A8A3 | dc Block *(except Option UKB)* | E4403-60026 |
| 2 | A8FL1 | 3.1 GHz Low Pass Filter | 0955-0988 |
| 3 | A8MP3 | Filter Clamp | 5022-3619 |
| 4 | A8MP1 | Micro Bracket | E4404-00001 |

**Table 5-18 (Continued)**

| Item | Reference Designator | Description | Part Number |
|---|---|---|---|
| 5 | A8A6 | 6.7/13.2 GHz Routing YIG-Tuned Harmonic Mixer (RYTHM) *(E4404B, E4405B)* | 5087-7034 |
| | | 6.7/13.2 GHz Routing YIG-Tuned Harmonic Mixer (RYTHM) Exchange Part *(E4404B, E4405B)* | 5087-6034 |
| | | 26.5 GHz Routing YIG-Tuned Harmonic Mixer (RYTHM) *(E4407B, E4408B)* | 5087-7031 |
| | | 26.5 GHz Routing YIG-Tuned Harmonic Mixer Exchange Part (RYTHM) *(E4407B, E4408B)* | 5087-6031 |
| 6 | A8A2 | Second Converter | 5086-7958 |
| 7 | A8MP2 | Sub-bracket | E4404-00003 |
| 8 | A8A5 | 6.7/13.2 GHz Input Attenuator *(E4404B, E4405B)* | 33321-60052 |
| | | 26.5 GHz Input Attenuator *(except Option UKB)* *(E4407B, E4408B)* | 33321-60057 |
| | | 26.5 GHz Input Attenuator *(Option UKB)* *(E4407B)* | 33321-60061 |
| 9 | A8A4 | LO Amp/IF Switch | E4404-60030 |

**Figure 5-15** **Microwave RF Assembly Bottom View, Semi-rigid Cables E4402B and E4403B**

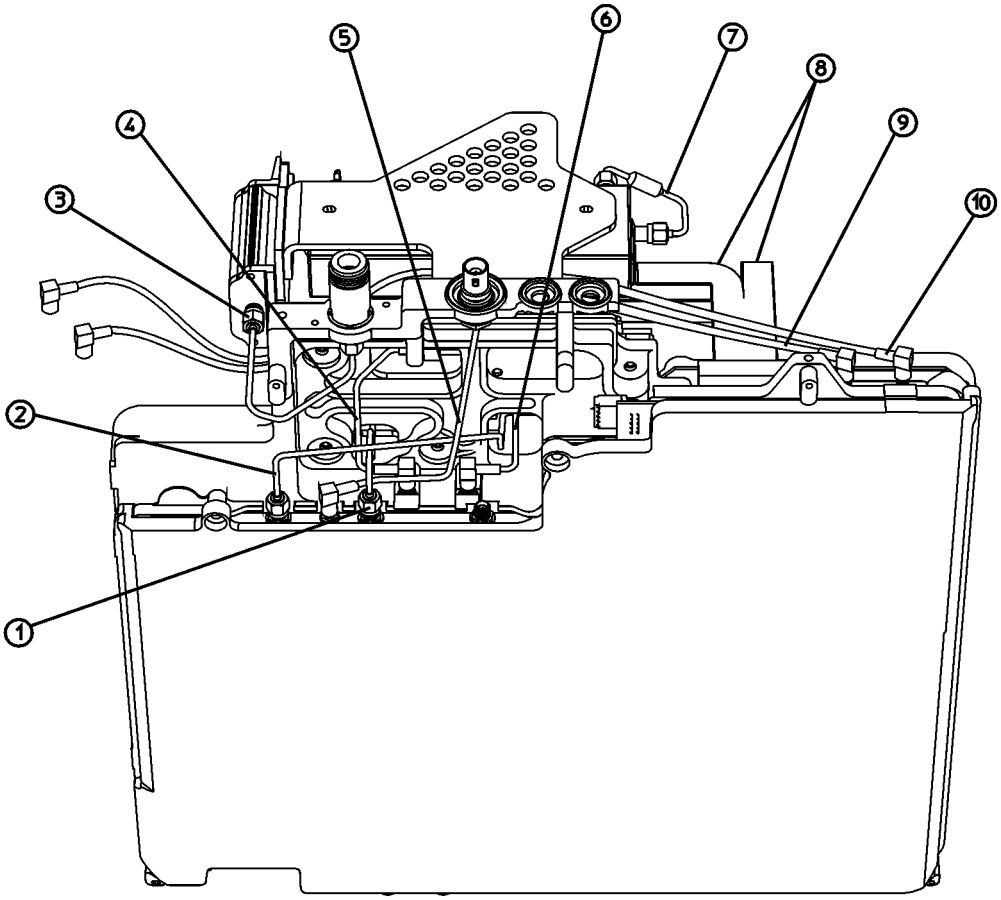


Table 5-19 provides a schematic reference designation, a description, and a part number for the items called out in Figure 5-15.

**Table 5-19**

| Item | Reference Designator | Description | Cable Runs | | Part Number |
|---|---|---|---|---|---|
| | | | From | To | |
| 1 | W8 | Filtered Low Band RF Input Cable, Semi-rigid Coax | A8FL1J1 | A8A1A2J2 | E4403-20028 |
| 2 | W9 | 3.9 GHz IF Cable, Semi-rigid Coax | A8A1A2J3 | A8A2J1 | E4403-20029 |
| 3 | W7 | RF Input Cable, Semi-rigid Coax | A8J1 | A8A3J1 | E4403-20026 |
| 4 | W10 | 600 MHz 2$^{nd}$ LO Drive Cable, Flexible Coax | A8A1A1P1 | A8A2J4 | 8120-8674 |

**Table 5-19 (Continued)**

| Item | Reference Designator | Description | Cable Runs | | Part Number |
|---|---|---|---|---|---|
| | | | From | To | |
| 5 | A8A1W4 | 50 MHz External Amptd Ref Out Signal Cable/Connector, Flexible Coax | A8A1A2J4 | A8J2 | 5062-0721 |
| 6 | W11 | 2nd Converter 321.4 MHz IF Output Cable, Flexible Coax | A8A2J2 | A8A1A1P2 | 8120-8674 |
| 7 | W15 | RF Attenuator Output, Semi-rigid Coax | A8A5J2 | A8FL1J2 | E4403-20027 |
| 8 | W5 | Attenuator and 2nd Converter Power and Control, Ribbon Cable | A8A1A1J2 | A8A5J3 and A8A2J6 | E4403-60019 |
| 9 | W12 | 600 MHz Tracking Generator Drive Cable, Flexible Coax, Option 1DN | A8A1A1P3 | A2A2J5 | E4402-60022 |
| 10 | W2 | 21.4 MHz IF, RF to IF Cable, Flexible Coax | A8A1A1P5 | A3J2 | 8120-6153 |

**Figure 5-16** **Microwave RF Assembly Front View, Semi-rigid Cables E4404B, E4405B, E4407B and E4408B**

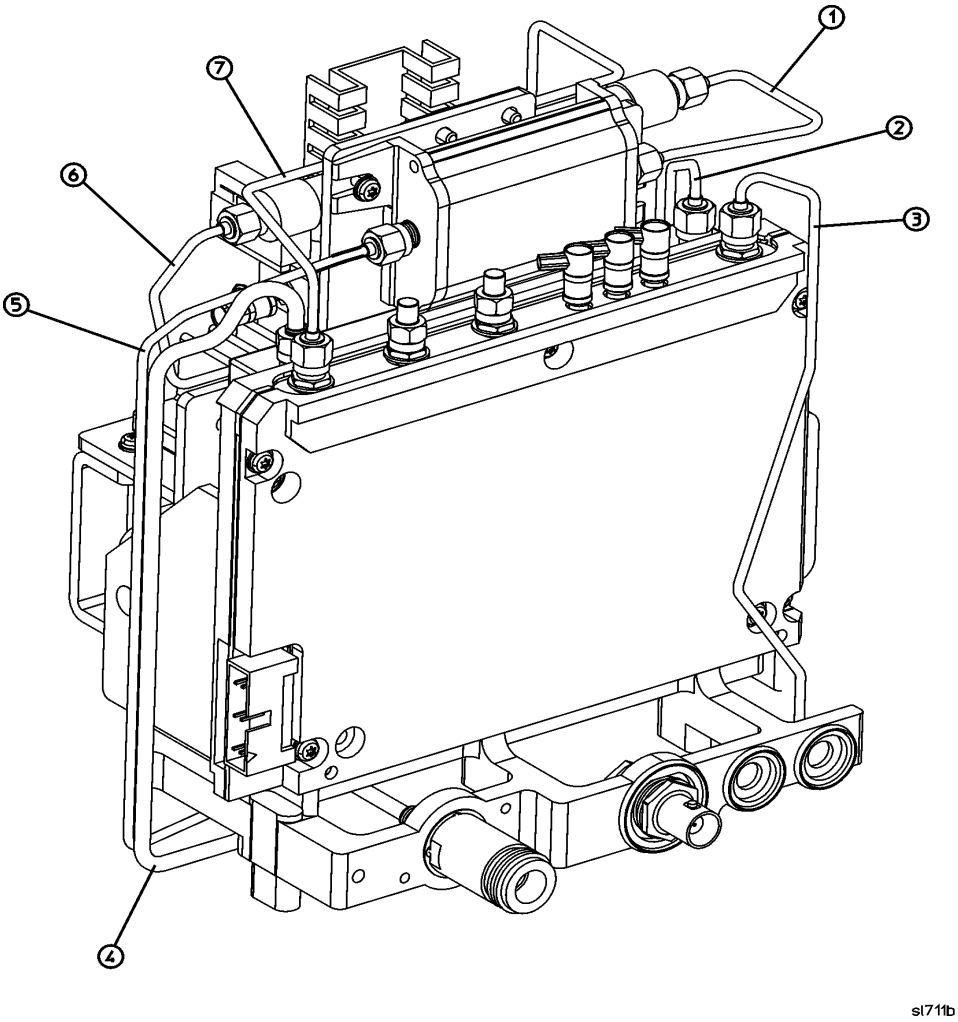


Table 5-20 provides a schematic reference designation, a description, and a part number for the items called out in Figure 5-16.

**Table 5-20**

| Item | Reference Designator | Description | From | To | Part Number |
|---|---|---|---|---|---|
| 1 | W19 | dc Blocked RF Input Cable, Semi-rigid Coax | A8FL1J2 | A8A3J2 | E4404-20004 |
| 2 | W17 | RF Attenuator Output Cable, Semi-rigid Coax *(E4404B, E4405B)* | A8A6J3 | A8A5J2 | E4404-20014 |
| | | RF Attenuator Output Cable, Semi-rigid Coax *(E4407B, E4408B)* | A8A6J3 | A8A5J2 | E4404-20018 |
| 3 | W23 | Aux LO Output Cable, Semi-rigid Coax | A8A4J1 | A8A1A2J5 | E4404-20008 |
| 4 | W6 | RF Input Cable, Semi-rigid Coax *(E4404B, E4405B)* | A8A5J1 | A8J1 | E4404-20009 |
| | | RF Input Cable, Semi-rigid Coax *(E4407B, E4408B)* | A8A5J1 | A8J1 | E4404-20022 |
| | | RF Input Cable, Semi-rigid Coax, *(Option BAB) (E4407B, E4408B)* | A8A5J1 | A8J1 | E4404-20017 |
| 5 | W8 | Filtered Low Band RF Input Cable, Semi-rigid Coax | A8A1A2J2 | A8A3J1 | E4404-20015 |
| 6 | W18 | RYTHM Low Band Output Cable, Semi-rigid Coax | A8FL1J1 | A8A6J2 | E4404-20003 |
| 7 | W24 | RYTHM LO Cable, Semi-rigid Coax | A8A6J4 | A8A4J2 | E4404-20005 |

**Figure 5-17** **Microwave RF Assembly Front View, Semi-rigid Cables Option UKB E4402B**

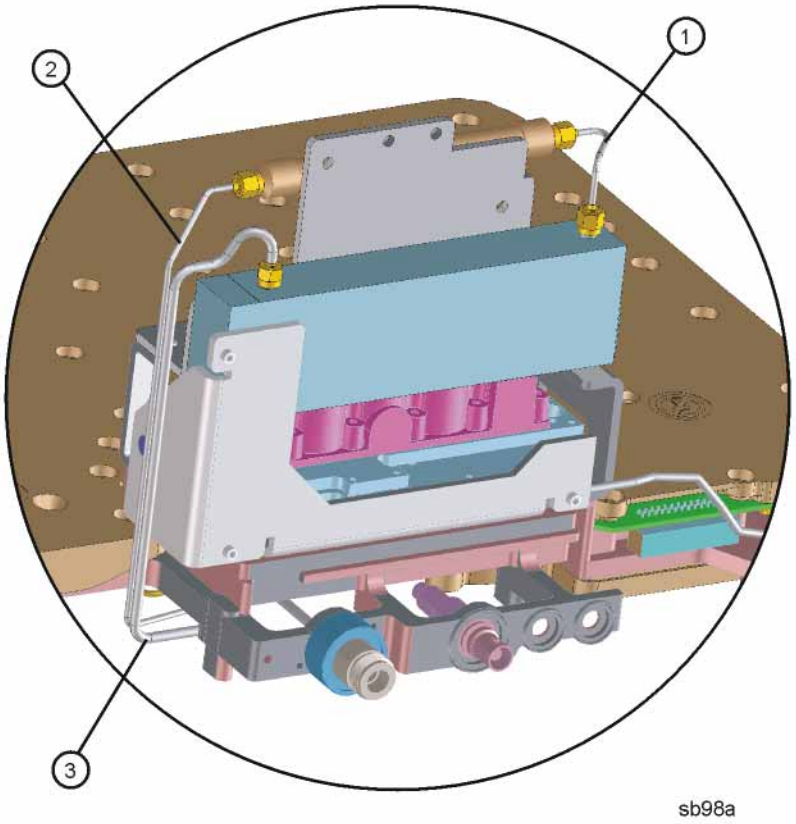


Table 5-21 provides a schematic reference designation, a description, and a part number for the items called out in Figure 5-17.

**Table 5-21**

| Item | Reference Designator | Description | From | To | Part Number |
|---|---|---|---|---|---|
| 1 | W15 | RF Attenuator Output Cable, Semi-rigid Coax | A8A5J2 | A8FL1J1 | E4403-20059 |
| 2 | W8 | Filtered Lowband Cable, Semi-rigid Coax | A8FL1J2 | A8A1A2J2 | E4403-20058 |
| 3 | W6 | RF Input Cable, Semi-rigid Coax | A8A5J1 | A8J1 | E4404-20009 |

**Figure 5-18** **Microwave RF Assembly Front View, Semi-rigid Cables Option UKB E4404B, E4405B, and E4407B**

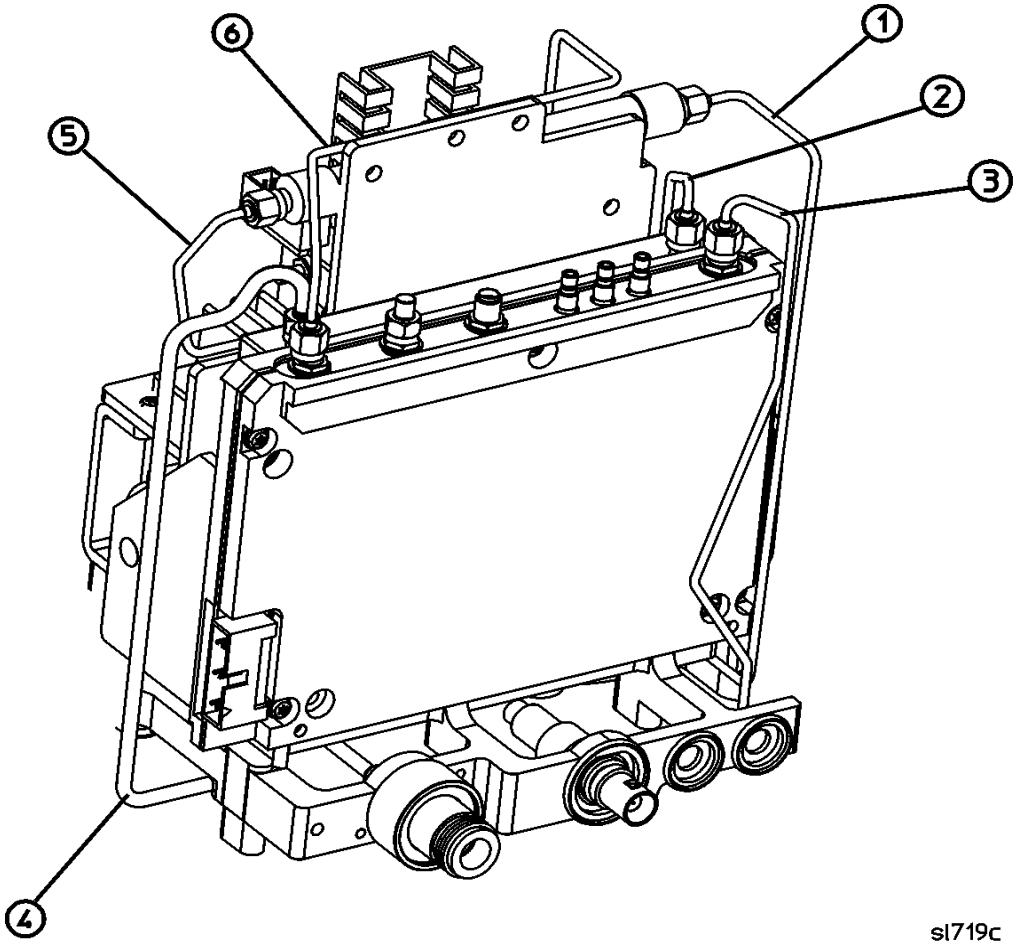


Table 5-22 provides a schematic reference designation, a description, and a part number for the items called out in Figure 5-18.

**Table 5-22**

| Item | Reference Designator | Description | From | To | Part Number |
|---|---|---|---|---|---|
| 1 | W35 | Filtered Low Band RF Input Cable, Semi-rigid Coax | A8FL1J2 | A8A1A2J2 | E4404-20026 |
| 2 | W17 | RF Attenuator Output Cable, Semi-rigid Coax *(E4404B, E4405B)* | A8A6J3 | A8A5J2 | E4404-20014 |
| | | RF Attenuator Output Cable, Semi-rigid Coax *(E4407B)* | A8A6J3 | A8A5J2 | E4404-20018 |
| 3 | W23 | Aux LO Output Cable, Semi-rigid Coax | A8A4J1 | A8A1A2J5 | E4404-20008 |
| 4 | W6 | RF Input Cable, Semi-rigid Coax *(E4404B, E4405B)* | A8A5J1 | A8J1 | E4404-20009 |
| 5 | W18 | RYTHM Low Band Output Cable, Semi-rigid Coax | A8FL1J1 | A8A6J2 | E4404-20003 |
| 6 | W22 | RYTHM LO Cable, Semi-rigid Coax | A8A6J4 | A8A4J2 | E4404-20005 |

**Figure 5-19** **Microwave RF Assembly Rear View, Semi-rigid Cables E4404B, E4405B, E4407B and E4408B**

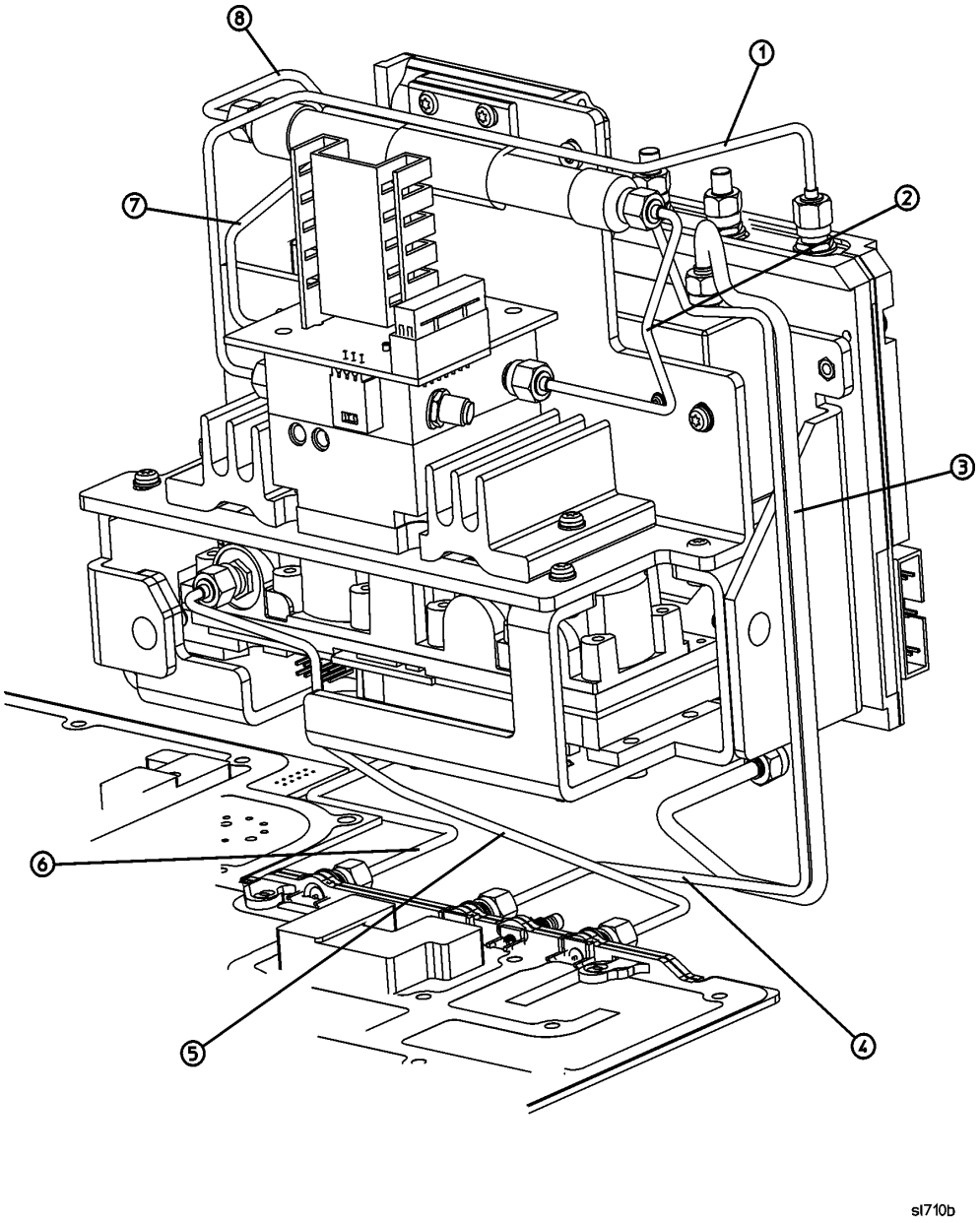


Table 5-23 provides a schematic reference designation, a description, and a part number for the items called out in Figure 5-19.

**Table 5-23**

| Item | Reference Designator | Description | From | To | Part Number |
|---|---|---|---|---|---|
| 1 | W22 | RYTHM LO Cable, Semi-rigid Coax | A8A4J2 | A8A6J4 | E4404-20005 |
| 2 | W18 | RYTHM Low Band Output Cable, Semi-rigid Coax | A8A6J2 | A8FL1J1 | E4404-20003 |
| 3 | W6 | RF Input Cable, Semi-rigid Coax *(E4404B, E4405B)* | A8J1 | A8A5J1 | E4404-20009 |
| | | RF Input Cable, Semi-rigid Coax *(E4407B, E4408B)* | A8J1 | A8A5J1 | E4404-20022 |
| | | RF Input Cable, Semi-rigid Coax, *(Option BAB) (E4407B, E4408B)* | A8J1 | A8A5J1 | E4404-20017 |
| 4 | W8 | Filtered Low Band RF Input Cable, Semi-rigid Coax | A8A3J1 | A8A1A2J2 | E4404-20015 |
| 5 | W9 | 3.9 GHz IF Cable, Semi-rigid Coax | A8A1A2J3 | A8A2J1 | E4403-20029 |
| 6 | W23 | Aux LO Output Cable, Semi-rigid Coax | A8A1A2J5 | A8A4J1 | E4404-20008 |
| 7 | W17 | RF Attenuator Output Cable, Semi-rigid Coax *(E4404B, E4405B)* | A8A5J2 | A8A6J3 | E4404-20014 |
| | | RF Attenuator Output Cable, Semi-rigid Coax *(E4407B, E4408B)* | A8A5J2 | A8A6J3 | E4404-20018 |
| 8 | W19 | dc Blocked RF Input Cable, Semi-rigid Coax | A8A3J2 | A8FL1J2 | E4404-20004 |

**Figure 5-20 Microwave RF Assembly Front View, Flexible Coaxial Cables E4404B, E4405B, E4407B and E4408B**

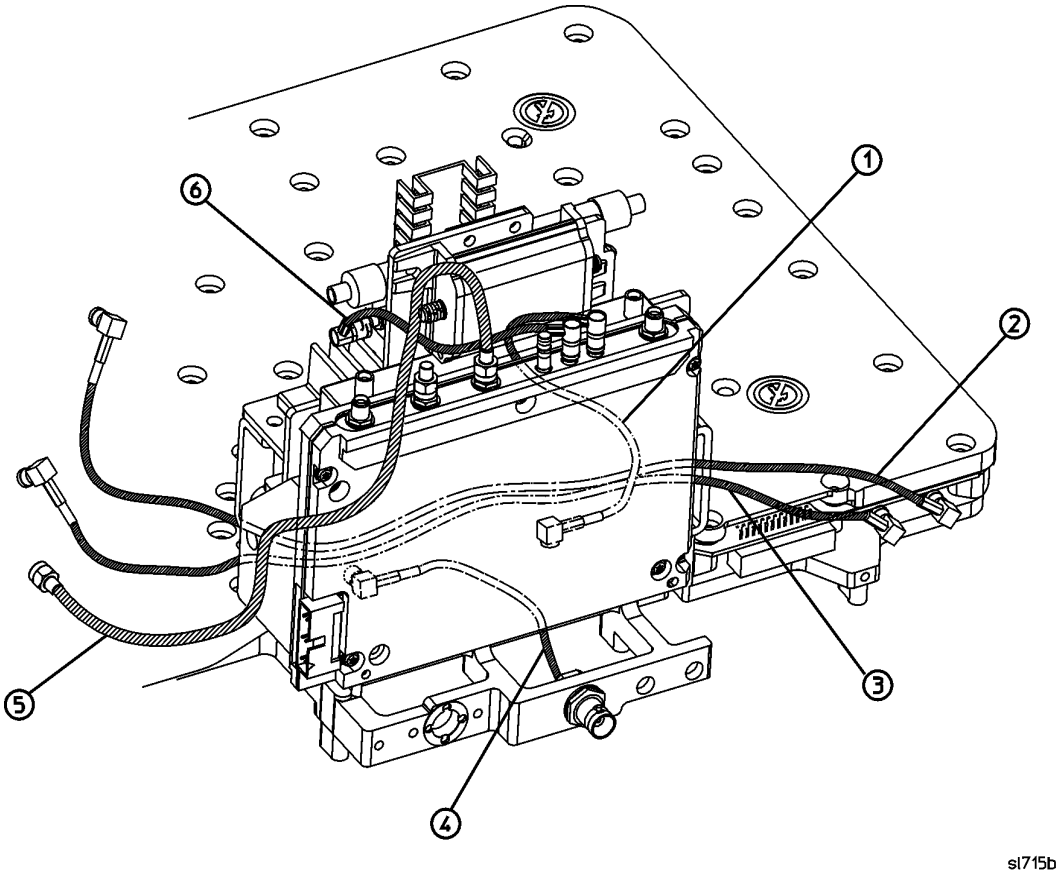


Table 5-24 provides a schematic reference designation, a description, and a part number for the items called out in Figure 5-20.

**Table 5-24**

| Item | Reference Designator | Description | From | To | Part Number |
|---|---|---|---|---|---|
| 1 | W21 | LOIS 321.4 MHz IF Output Cable, Flexible Coax | A8A4J7 | A8A2J3 | E4404-60008 |
| 2 | W2 | 21.4 MHz IF, RF to IF Cable, Flexible Coax | A8A1A1P5 | A3J2 | E4402-60020 |
| 3 | W12 | 600 MHz Tracking Generator Drive Cable, Flexible Coax, *(Option 1DN)* | A8A1A1P3 | A2A2J5 | E4402-60022 |
| 4 | A8A1W4 | 50 MHz External Amptd Ref Out Kit Signal Cable/Connector, Flexible Coax | A8A1A2J4 | A8J2 | 5062-0721 |
| 5 | W13 | 3.0 GHz Tracking Generator 1st LO Drive Cable, Braided Coax, *(Option 1DN)* | A8A4J3 | A2A1J3 | E4403-20023 |
| 6 | W20 | RYTHM 321.4 MHz IF Output Cable, Flexible Coax | A8A6J1 | A8A4J5 | 8120-8674 |

**Figure 5-21** **Microwave Option B74 RF Assembly Front View, Flexible Coaxial Cables E4402B, E4404B, E4405B and E4407B**

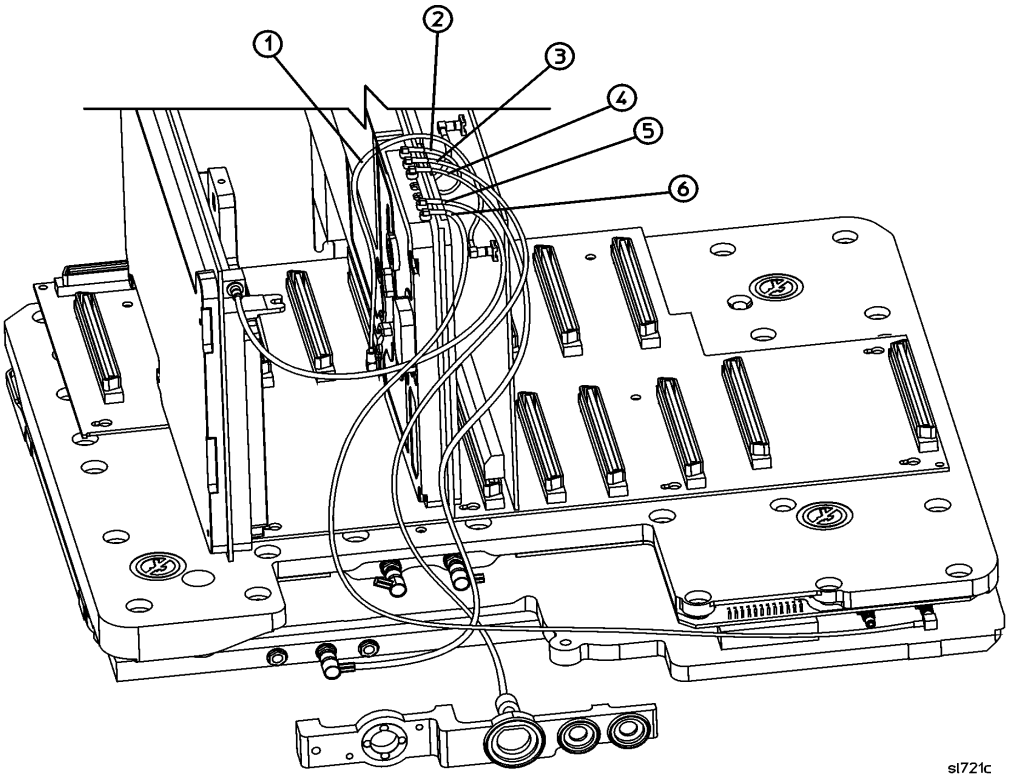


Table 5-24 provides a schematic reference designation, a description, and a part number for the items called out in Figure 5-20.

**Table 5-25**

| Item | Reference Designator | Description | From | To | Part Number |
|---|---|---|---|---|---|
| 1 | W33 | Digital Demod DSP Sample Rate (Flexible Coaxial) *(Option B7D)* | A7A7P4 | A7A8J12 | 8120-8867 |
| 2 | W34 | Digital Demod DSP IF (Flexible Cable) *(Option B7D)* | A7A7P5 | A7A8J5 | E4402-60027 |
| 3 | W30 | 50 MHz External Amptd Ref Out Kit Signal (Flexible Coaxial) *(Option B7E)* | A8A1A2J4 | A7A8J6 | E4402-60023 |
| 4 | W29 | Digital Demod RF Input (Flexible Coaxial) *(Option B7E)* | A8A8A2J4 | A7A8J7 | E4402-60024 |
| 5 | W32 | Digital Demod IF Output (Flexible Coaxial) *(Option B7E)* | A3J2 | A7A8J10 | 8120-8866 |
| 6 | W31 | 21.4 MHz IF, RF to IF In Cable, (Flexible Coaxial) | A8A1A1P5 | A7A8J11 | E4402-60021 |

**Figure 5-22 Microwave RF Assembly Rear View, Flexible Coaxial Cables E4404B, E4405B, E4407B and E4408B**

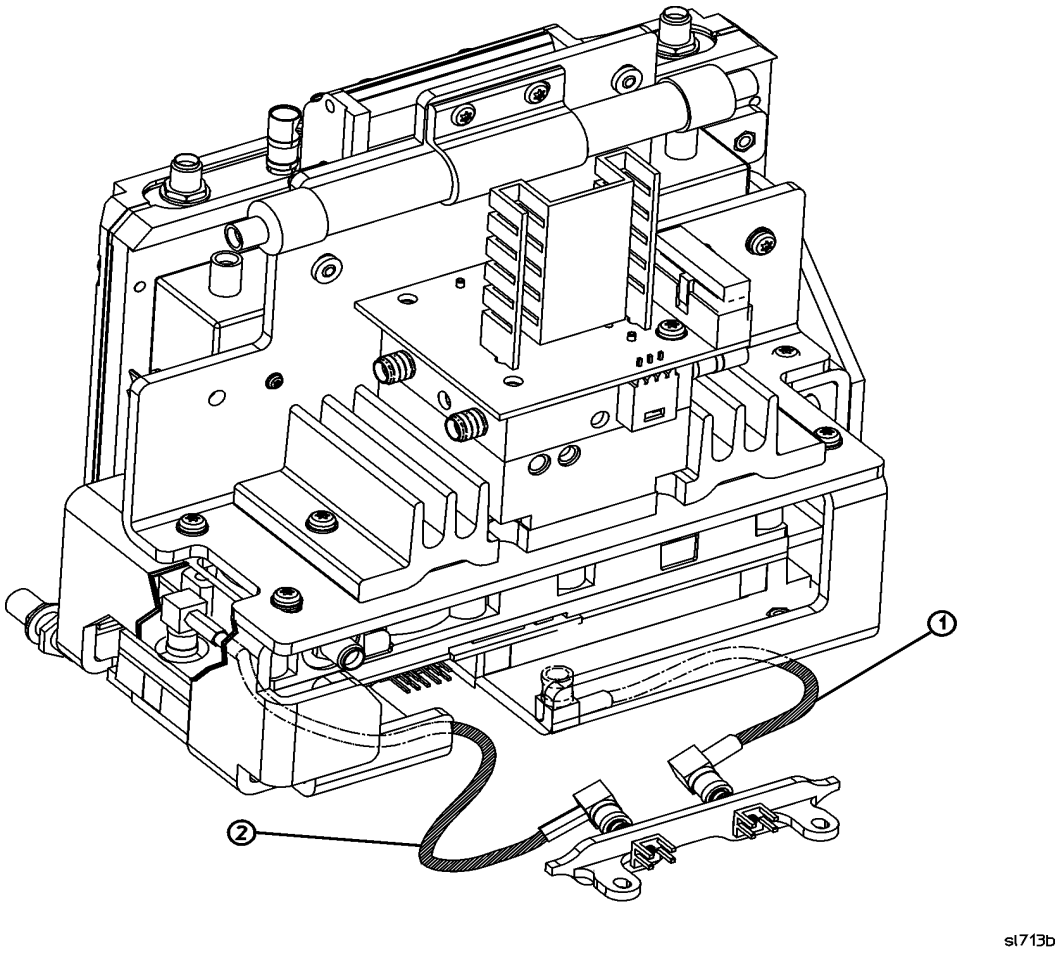


Table 5-26 provides a schematic reference designation, a description, and a part number for the items called out in Figure 5-22.

**Table 5-26**

| Item | Reference Designator | Description | From | To | Part Number |
|---|---|---|---|---|---|
| 1 | W10 | 600 MHz 2nd LO Drive Cable, Flexible Coax | A8A1A1P1 | A8A2J4 | 8120-8674 |
| 2 | W11 | 2nd Converter 321.4 MHz IF Output Cable, Flexible Coax | A8A2J2 | AiA1A1P2 | 8120-8674 |

**Figure 5-23 Microwave RF Assembly Ribbon Cables E4404B, E4405B, E4407B and E4408B**

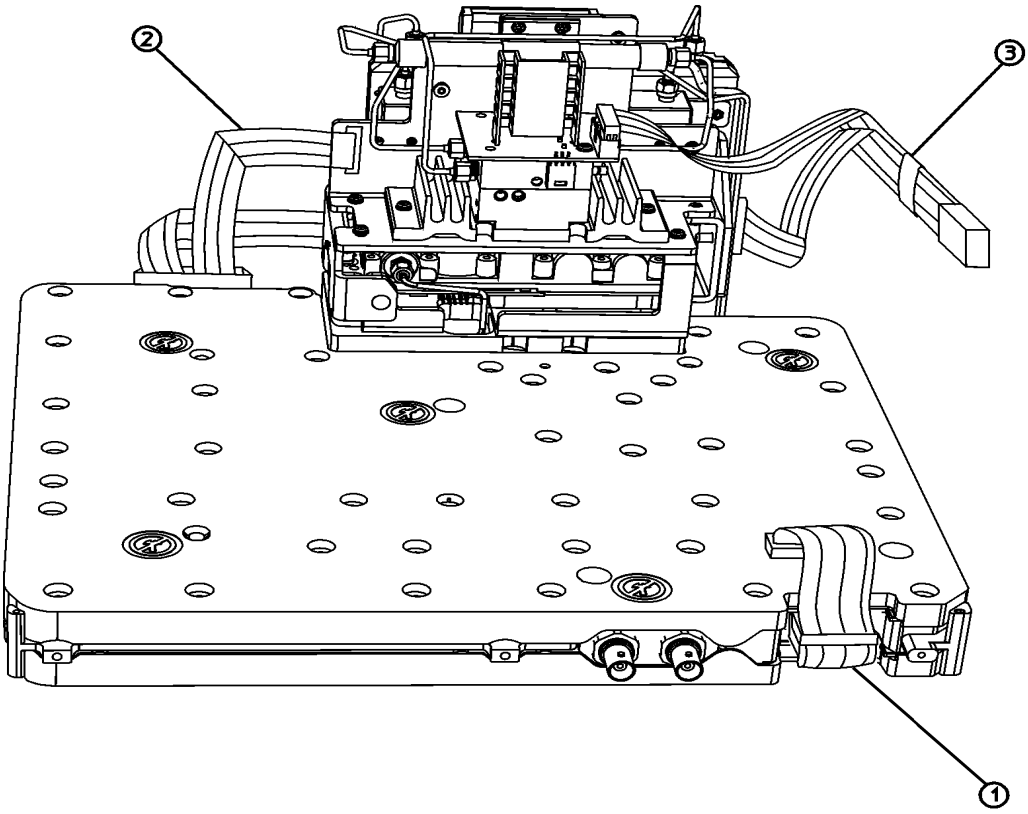


sl712b

Table 5-27 provides a schematic reference designation, a description, and a part number for the items called out in Figure 5-23.

**Table 5-27**

| Item | Reference Designator | Description | From | To | Part Number |
|---|---|---|---|---|---|
| 1 | W4 | RF Power and Control Cable, Ribbon | A7J4 | A8A1A1P6 and A8A1A2J1 | E4403-60018 |
| 2 | W5 | Attenuator and 2nd Converter Power and Control Cable, Ribbon *(E4407B, E4408B - except Option UKB)* | A8A1A1J2 | A8A5J3 and A8A2J6 | E4403-60019 |
| | | Attenuator and 2nd Converter Power and Control Cable, Ribbon *(E4404B, E4405B, and E4407B Option UKB)* | A8A1A1J2 | A8A5J3 and A8A2J6 | E4404-60004 |
| 3 | W16 | RYTHM/LOIS Power and Control Cable, Ribbon | A7A4J2 | A8A4J8 and A8A6J5 | E4404-60003 |

**Figure 5-24 Power Supply Hardware**

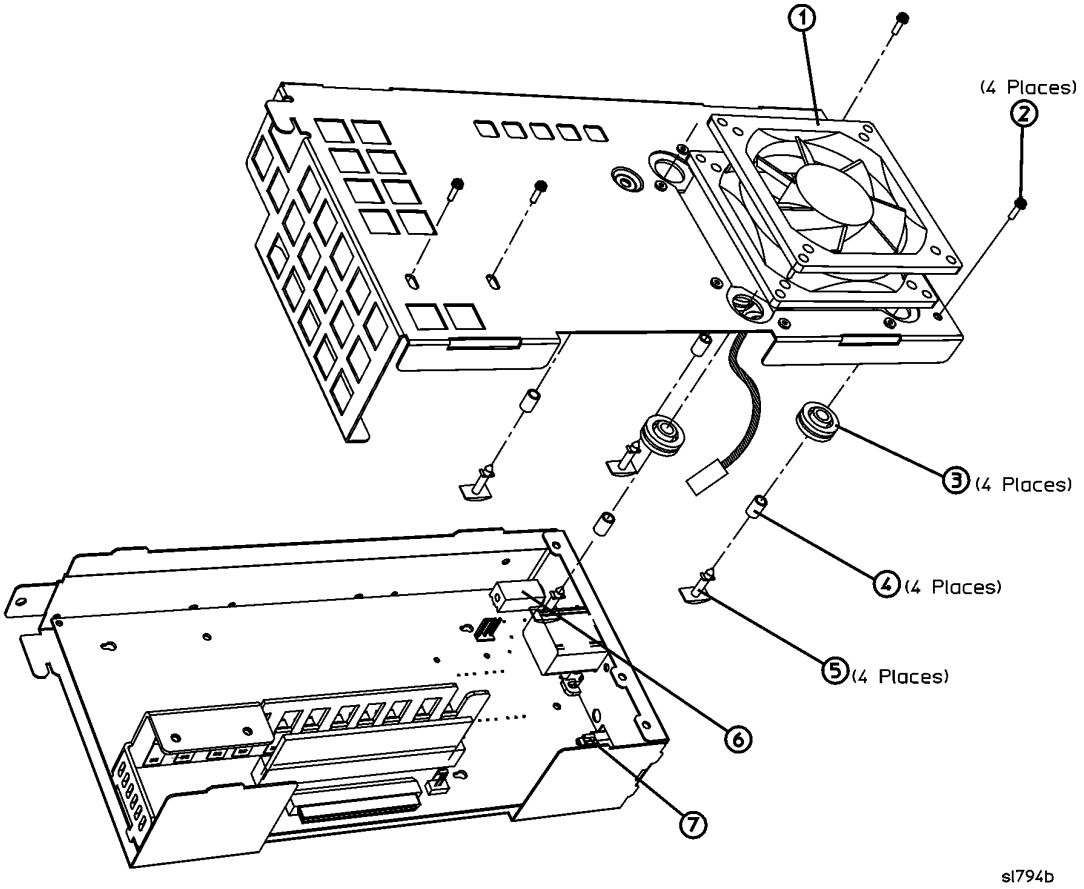


Table 5-28 provides a schematic reference designation, a description, and a part number for the items called out in Figure 5-24.

**Table 5-28**

| Item | Reference Designator | Description | Part Number |
|---|---|---|---|
| 1 | A5B1 | Fan | 3160-0866 |
| 2 | | Screw - M3 X 8 mm<br>(TORX Pan Head with Crest Washer) | 0515-0372 |
| 3 | | Rubber grommet | 0400-0713 |
| 4 | | Metal bushing | 0380-0006 |
| 5 | A5MP1-4 | Plastic rivet | 0361-1814 |
| 6 | A5F1 | Fuse (dc) 20 A, 32 V | 2110-1317 |
| 7 | A5F2 | Fuse (dc Line) 5 A, 250 V | 2110-0709 |

**Figure 5-25 1.5 GHz Tracking Generator Hardware**

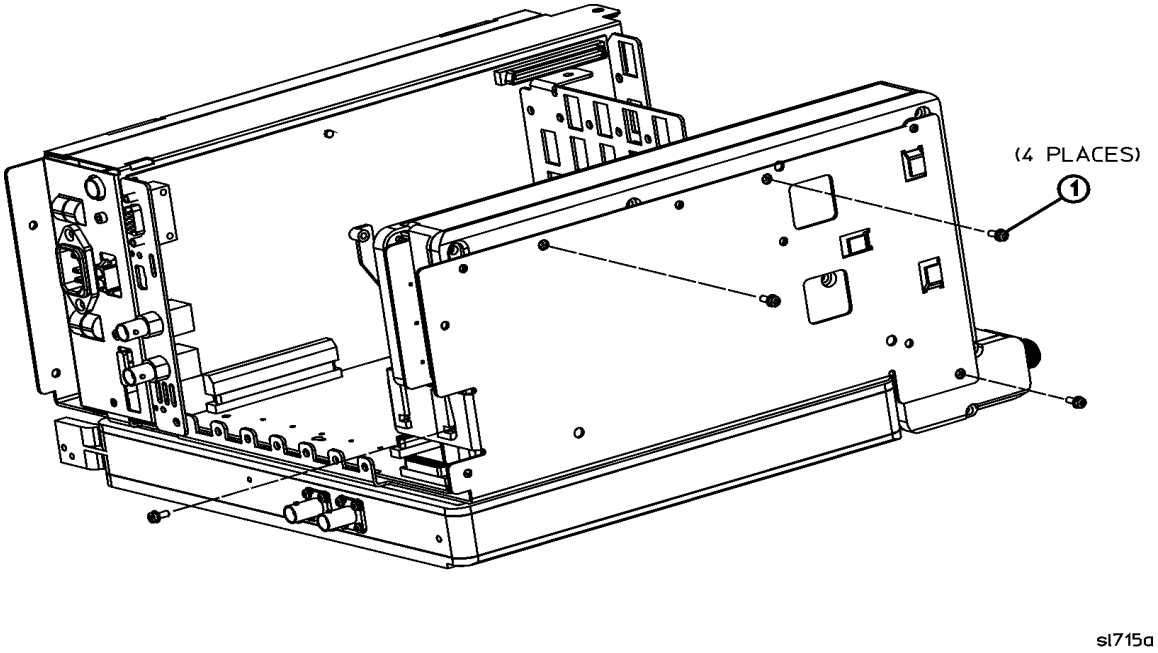


Table 5-29 provides a description, and a part number for the items called out in Figure 5-25.

**Table 5-29**

| Item | Description | Part Number |
|---|---|---|
| 1 | Screw - M3 X 8 mm<br>(TORX Pan Head with Crest Washer) | 0515-0372 |

**Figure 5-26 3.0 GHz Tracking Generator Hardware**

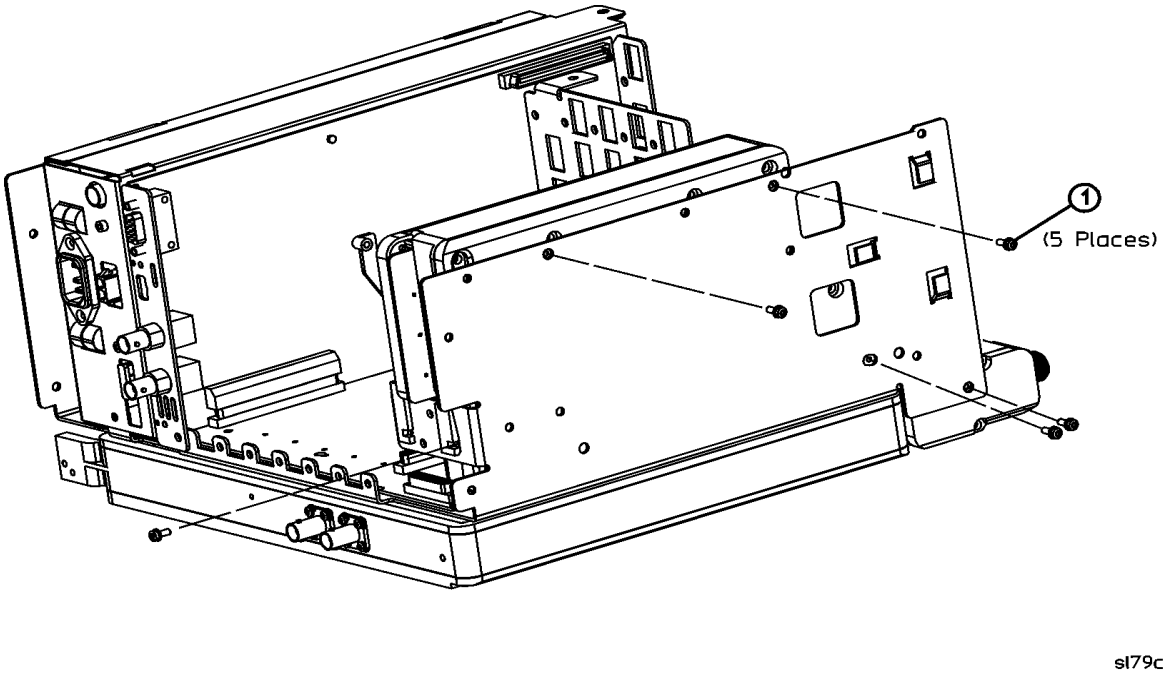


Table 5-30 provides a description, and a part number for the items called out in Figure 5-26.

**Table 5-30**

| Item | Description | Part Number |
|---|---|---|
| 1 | Screw - M3 X 8 mm<br>(TORX Pan Head with Crest Washer) | 0515-0372 |

**Figure 5-27 1.5 GHz Tracking Generator Assembly with Hardware**

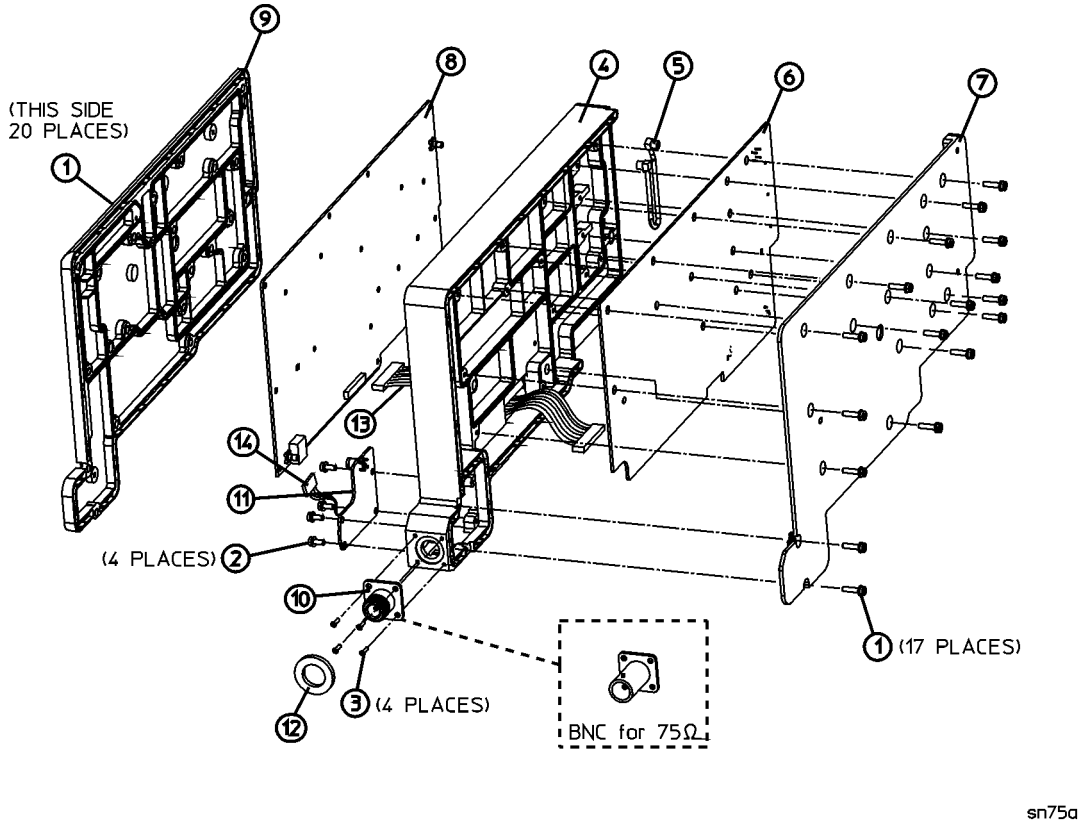


Table 5-31 provides a schematic reference designation, a description, and a part number for the items called out in Figure 5-27.

**Table 5-31**

| Item | Reference Designator | Description | Part Number |
|---|---|---|---|
| 1 | | Screw - M3 X 12 mm, waxed<br>(TORX Pan Head with Crest Washer) | 0515-2993 |
| 2 | | Screw - M3 X 8 mm<br>(TORX Pan Head with Crest Washer) | 0515-0372 |
| 3 | | Screw - M2.5 X 8 mm<br>(TORX Flat Head) | 0515-2487 |
| 4 | A2MP4 | 1.5 GHz TG Center Shield, *(Option 1DN/1DQ)* | E4401-60052 |
| 5 | A2W2 | 1.5 GHz TG Cable Assembly (internal Coaxial)<br>*(Option 1DN/1DQ)* (from A2A1J3 to A2A2J2) | 8120-6384 |
| 6 | A2A1 | 1.5 GHz TG Control Board Kit, *(Option 1DN/1DQ)* | E4401-60131 |
| 7 | A2MP7 | 1.5 GHz TG Control Shield, *(Option 1DN/1DQ)* | E4401-60051 |
| 8 | A2A2 | 1.5 GHz TG RF Board (50 Ω) Kit, *(Option 1DN)* | E4401-60133 |
| | | 1.5 GHz TG RF Board (75 Ω) Kit, *(Option 1DQ)* | E4401-60134 |
| 9 | A2MP9 | 1.5 GHz TG RF Shield, *(Option 1DN)* | E4401-60050 |
| 10 | A2J1 | 1.5 GHz TG RF Output Type-N Connector Kit, (50 Ω)<br>*(Option 1DN)* | 1250-2514 |
| | | 1.5 GHz TG RF Output BNC Connector Kit, (75 Ω)<br>*(Option 1DQ)* | 1250-2792 |
| 11 | A2A3 | 1.5 GHz TG Output Board (50 Ω) Kit, *(Option 1DN)* | E4401-60135 |
| | | 1.5 GHz TG Output Board (75 Ω) Kit, *(Option 1DQ)* | E4401-60136 |
| 12 | A2MP1 | 1.5 GHz TG RF Output Gasket (50 Ω) *(Option 1DQ)* | E4401-20024 |
| | | 1.5 GHz TG RF Output Gasket (75 Ω) *(Option 1DQ)* | E4401-20024 |
| 13 | A2W1 | 1.5 GHz TG Cable Assembly (internal Ribbon)<br>*(Option 1DN/1DQ)* (from A2A1J2 to A2A2J1) | 8120-6944 |

**Figure 5-28 3.0 GHz Tracking Generator Assembly with Hardware**

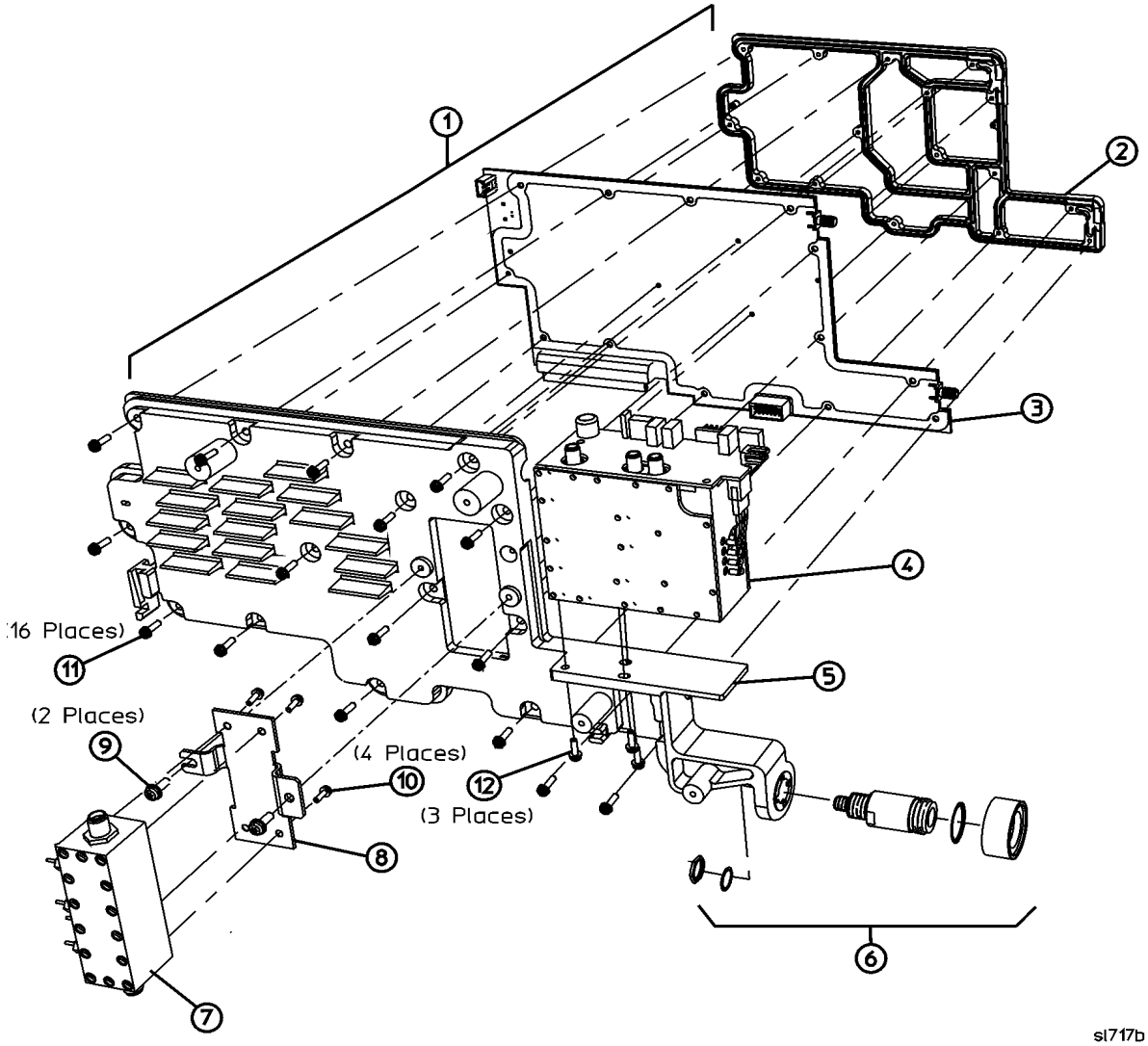


Table 5-32 provides a schematic reference designation, a description, and a part number for the items called out in Figure 5-28.

**Table 5-32**

| Item | Reference Designator | Description | Part Number |
|---|---|---|---|
| 1 | A2A1 | 3.0 GHz TG Driver Board Assembly with shields, *(Option 1DN)* | E4401-60131 |
| | | Item 3 - 3.0 GHz TG Driver Board, *(Option 1DN)* | |
| | A2MP3 | Item 2 - 3.0 GHz TG Cover Shield, *(Option 1DN)* | E4403-60006 |
| | A2MP2 | Item 5 - 3.0 GHz TG Support Shield, *(Option 1DN)* | E4403-60007 |
| 4 | A2A2 | 3.0 GHz BITG Microcircuit Assembly, *(Option 1DN)* | E4403-60089 |
| 6 | A2J1 | 3.0 GHz TG RF Output Type-N Connector Kit *(Option 1DN)* | E4403-60015 |
| | | Connector | |
| | | O-Ring | |
| | | Sleeve | |
| | | Washer | |
| | | Nut | |
| 7 | A2A3 | 3.0 GHz TG Output Attenuator, *(Option 1DN)* | 0955-0679 |
| 8 | A2MP5 | TG Attenuator Bracket, *(Option 1DN)* | E4403-00004 |
| 9 | | Screw - M3 X 8 mm (TORX Pan Head with Crest Washer) *(2 required)* | 0515-0372 |
| 10 | | Screw - M2-56 X 0.188 (TORX Flat Head) *(4 required)* | 0520-0314 |
| 11 | | Screw - M3 X 14 mm (TORX Pan Head with Crest Washer) *(16 required)* | 0515-2994 |
| 12 | | Screw - M3 X 10 mm (TORX Pan Head with Crest Washer) *(3 required)* | 0515-2134 |

**Figure 5-29 3.0 GHz Tracking Generator Assembly with Cables**

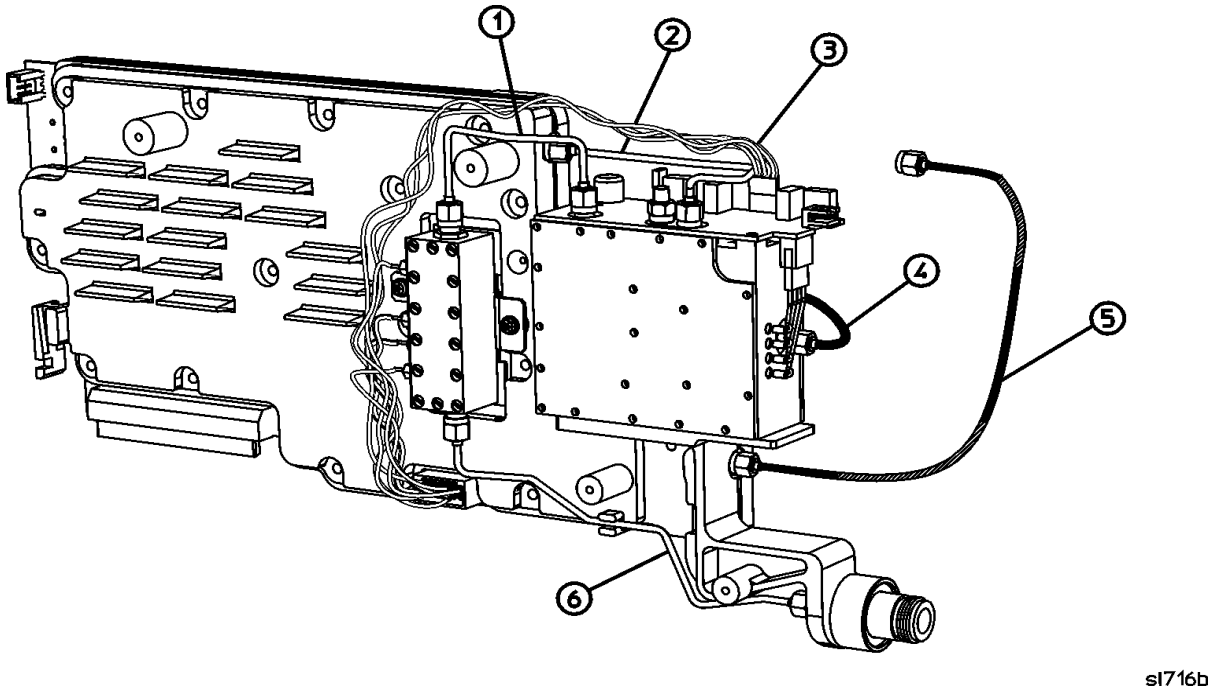


Table 5-33 provides a schematic reference designation, a description, and a part number for the items called out in Figure 5-29.

**Table 5-33**

| Item | Reference Designator | Description | From | To | Part Number |
|---|---|---|---|---|---|
| 1 | A2W3 | 3.0 GHz TG RF Output Semi-rigid Cable, *(Option 1DN)* | A2A2J2 | A2A3J1 | E4403-20073 |
| 2 | A2W2 | 3.0 GHz TG LO Drive Semi-rigid Cable, *(Option 1DN)* | A2A1J2 | A2A2J4 | E4403-20072<br>E4403-20083 |
| 3 | A2W1 | 3.0 GHz TG Power & Control Wire Harness, *(Option 1DN)* | A2A1P1 | A2A2J1 | E4403-60025 |
| 4 | W12 | 600 MHz TG Drive Flexible Coax, *(Option 1DN)* | A8A1A1P3 | A2A2J5 | E4402-60022 |
| 5 | W13 | 3.0 GHz TG 1st LO Drive Braided Coax Cable, *(Option 1DN) (E4402B, E4403B)* | A8A1A2J5 | A2A1J3 | E4403-20023 |
| | | 3.0 GHz TG 1st LO Drive Braided Coax Cable, *(Option 1DN) (E4404B, E4405B, E4407B, E4408B)* | A8A4J3 | A2A1J3 | E4403-20023 |
| 6 | A2W4 | 3.0 GHz TG Attenuator RF Output Semi-rigid Cable, *(Option 1DN)* | A2A3J2 | A2J1 | E4403-20022 |

# Component-Level Information Packets

Component-level information is available for selected instrument assemblies. The information for each repairable assembly is provided in the form of a Component-Level Information Packets (CLIPs).

A CLIP consists of a parts list, component-location diagram, and schematic diagram relating to a unique instrument assembly. An Agilent part number is assigned to each CLIP. When an assembly number changes, a new CLIP is generated.

## Ordering CLIPs

For ordering convenience, current CLIPs for a specific instrument are combined into component-level information binders. The current set of CLIPs contains information supporting the instrument assemblies manufactured at the time the manuals was printed, plus a packet containing general CLIP information.

A complete set of CLIPs can be ordered by ordering the CLIP set Option 0BV part number: E4401-90310.

Updated or replacement CLIPs may be ordered through your local Agilent Technologies Sales or Service office using the CLIP part number provided inTable 5-34 on page 239.

**Table 5-34 ESA Series Spectrum Analyzer Board Assembly, Serial Number, and CLIP Number Cross-Reference**

| Reference Designator | Assembly Description | Board Assembly Part Number | Serial Number | CLIP Part Number |
|---|---|---|---|---|
| A1A1 | Front panel interface | E4401-60234 | | E4401-90163 |
| A2A1 | 1.5 GHz Tracking Generator Control *(Option 1DN)* | E4401-60095 | | E4401-90120 |
| | 3.0 GHz Tracking Generator Control *(Option 1DN)* | E4403-60004 | | E4403-90003 |
| A2A2 | 1.5 GHz Tracking Generator RF (50 Ohm) *(Option 1DN)* | E4401-60004 | | E4401-90031 |
| | 1.5 GHz Tracking Generator RF (75 Ohm) *(Option 1DN)* | E4402-60004 | | E4402-90003 |
| A2A3 | 1.5 GHz Tracking Generator Output (50 Ohm) *(Option 1DN)* | E4401-60005 | | E4401-90033 |
| | 1.5 GHz Tracking Generator Output (75 Ohm) *(Option 1DN)* | E4402-60005 | | E4402-90001 |
| A3 | 21.4 MHz IF with shields | E4401-60183 | | E4401-90164 |
| A4 | Processor | E4401-60059 | | E4401-90122 |
| A6 | Speaker/Floppy | E4401-60008 | | E4401-90021 |
| A7 | Motherboard (ESA-L Series) | E4411-60013 | | E4411-90057 |
| | Motherboard (ESA-E Series) | E4401-60107 | | E4401-90119 |
| A7A1 | IF Video Sweep Ports, *(Option A4J)* | E4401-60096 | | E4401-90125 |
| A7A2 | GPIB *(Option A4H)* | E4401-60013 | | E4401-90025 |
| A7A3 | Serial/Parallel I/O *(Option 1AX)* | E4401-60014 | | E4401-90026 |
| A7A4 | Frequency Extension | E4404-60001 | | E4401-90001 |
| A7A5 | Fast ADC *(Option AYX)* | E4401-60083 | | E4401-90123 |
| A7A6 | FM Demod *(Option BAA)* | E4401-60082 | | E4401-90124 |
| A8 | 1.5 GHz RF (50 ohm) | E4401-60203 | | E4401-90216 |
| | 1.5 GHz RF (75 ohm) | E4401-60100[a] | | E4401-90127 |
| A8A1A1 | 3.0 GHz Reference/ Third Converter (50 ohm) (Top Board) | E4403-60001 | | E4403-90004 |
| | 3.0 GHz Reference/ Third Converter with precision frequency reference (50 ohm) (Top Board) | E4403-60053[a] | | E4403-90006 |

**Table 5-34 ESA Series Spectrum Analyzer Board Assembly, Serial Number, and CLIP Number Cross-Reference (Continued)**

| Reference Designator | Assembly Description | Board Assembly Part Number | Serial Number | CLIP Part Number |
|---|---|---|---|---|
| A8A1A2 | 3.0 GHz Front End/LO (Bottom Board) | E4403-60033 | | E4403-90008 |
| A7A7 | Digital Demod DSP Assembly, *(Option B7D)* | E4401-60088 | | E4401-90213 |
| A7A8 | Digital Demod RF Assembly, *(Option B7E)* | E4402-60087 | | E4401-90214 |

a. Denotes refurbished board assemblies are available. Refurbished board assembly part numbers have 9 as the second digit of the suffix. For example, E4401-69119 is the refurbished part number for board assembly E4401-60119.

## Contacting Agilent Technologies

For assistance, contact your nearest Agilent Technologies Sales and Service Office. To find your local Agilent office access the following URL, or if in the United States, call the following telephone number:

http://www.agilent.com/find/assist

1-800-829-4444 (8 am - 8 pm ET, Monday - Friday)

In any correspondence or telephone conversations, refer to your analyzer by its product number, full serial number, and firmware revision.

# How to Return Your Analyzer for Service

## Service Tag

If you are returning your analyzer to Agilent Technologies, Inc. for servicing, fill in and attach a blue service tag. Several service tags are supplied at the rear of this chapter. Please be as specific as possible about the nature of the problem. If you have recorded any error messages that appeared on the display, or have completed a Performance Test Record, or have any other specific data on the performance of your analyzer, please send a copy of this information with your analyzer.

## Original Packaging

Before shipping, pack the unit in the original factory packaging materials if they are available. If the original materials were not retained, see “Other Packaging” on page 244.

**NOTE** Ensure that the instrument handle is in the rear-facing position in order to reduce the possibility of damage during shipping. Refer to the following illustration.

**NOTE** Install the transportation disk into the floppy drive to reduce the possibility of damage during shipping. If the original transportation disk is not available, a blank floppy may be substituted.

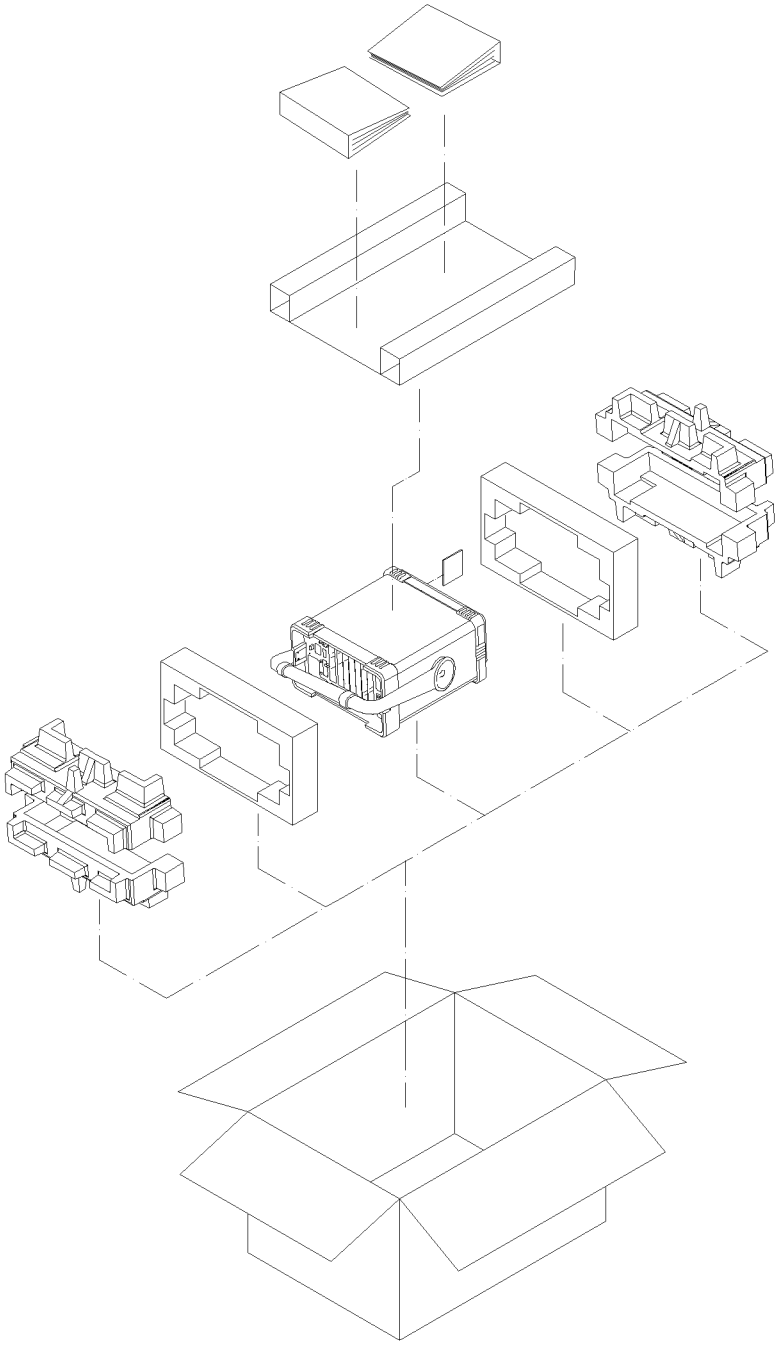

ormt122

## Other Packaging

**CAUTION** Analyzer damage can result from using packaging materials other than those specified. Never use styrene pellets in any shape as packaging materials. They do not adequately cushion the equipment or prevent it from shifting in the carton. They cause equipment damage by generating static electricity and by lodging in the analyzer louvers, blocking airflow.

You can repackage the instrument with commercially available materials, as follows:

1. Attach a completed service tag to the instrument.
2. Install the transportation disk or a blank floppy disk into the disk drive.
3. If you have a front-panel cover, install it on the instrument. If you do not have a front panel cover, make sure the instrument handle is in the forward-facing position to protect the control panel.
4. Wrap the instrument in antistatic plastic to reduce the possibility of damage caused by electrostatic discharge.
5. Use a strong shipping container. A double-walled, corrugated cardboard carton with 159 kg (350 lb) bursting strength is adequate. The carton must be both large enough and strong enough to accommodate the analyzer. Allow at least 3 to 4 inches on all sides of the analyzer for packing material.
6. Surround the equipment with three to four inches of packing material to prevent the equipment from moving in the carton. If packing foam is not available, the best alternative is S.D.-240 Air Cap™ from Sealed Air Corporation (Hayward, California, 94545). Air Cap looks like a plastic sheet filled with 1-1/4 inch air bubbles. Use the pink-colored Air Cap to reduce static electricity. Wrapping the equipment several times in this material should both protect the equipment and prevent it from moving in the carton.
7. Seal the shipping container securely with strong nylon adhesive tape.
8. Mark the shipping container “FRAGILE, HANDLE WITH CARE” to assure careful handling.
9. Retain copies of all shipping papers.

# 6 Replacing Assemblies

## What You Will Find in This Chapter

The procedures in this chapter describe the location, removal and replacement of major assemblies in the spectrum analyzer. Refer to Chapter 5, “Parts List,” for part numbers, assembly descriptions, and ordering information.

Numbers in parentheses, for example **(1)**, indicate numerical callouts on the figures.

# Before You Start

Before starting to disassemble the analyzer:

- o Check that you are familiar with the safety symbols marked on the analyzer, and read the general safety considerations and the safety note definitions given in the front of this guide.
- o The spectrum analyzer contains static sensitive components. Read the section entitled "ESD Information" in Chapter 1.

**WARNING** **The opening of covers or removal of parts is likely to expose dangerous voltages. Disconnect the product from all voltage sources while it is being opened.**

**WARNING** **The spectrum analyzer contains potentially hazardous voltages. Refer to the safety symbols on the spectrum analyzer and the general safety considerations at the beginning of this service guide before operating the unit with the cover removed. Failure to heed the safety precautions can result in severe or fatal injury.**

## Service tools you will need

**Figure 6-1** **TORX Tool**

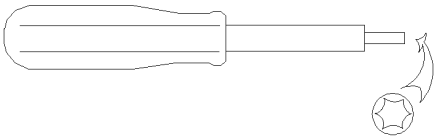

s1736a

**Table 6-1**

| Description | Agilent Part Number |
|---|---|
| TORX Hand Driver - Size T8 | 8710-1614 |
| TORX Hand Driver - Size T10 | 8710-1623 |
| TORX Hand Driver - Size T15 | 8710-1622 |

## After a spectrum analyzer repair

If one or more analyzer assemblies have been repaired or replaced, perform the related adjustments and performance verification tests. Refer to Table 7-2 on page 330 for the related adjustments and performance verification tests required for each assembly.

The adjustments and performance verification tests are done using the *Performance Verification and Adjustment Software*. The software can be purchased through your local Agilent Technologies sales and service office. (Refer to Chapter 8, “Performance Verification and Adjustment Software,” on page 333.)

## Removal and Replacement Procedures in This Chapter

This chapter describes the removal and replacement procedures for the following Agilent ESA series spectrum analyzer major assemblies:

"Instrument Outer Case" on page 250
"Chassis Cover" on page 252
"A1 Front Frame Assembly" on page 254
"Nameplate" on page 257
"Connector Label" on page 258
"Front Frame Subassemblies" on page 262, which includes:

- "A1A2 Display" on page 262
- "A1A1 Front Panel Interface Board" on page 265
- "Front Panel RPG" on page 266
- "Keypad/Flex Circuit" on page 267
- "Lens/Keypad Assembly" on page 268
- "Display Backlight" on page 269
- "Media Door/Bezel" on page 270

"A2 1.5 GHz Tracking Generator Assembly" on page 274, which includes:

- "Tracking Generator Boards" on page 275
- "1.5 GHz Tracking Generator RF Output Connector" on page 278

"A2 3.0 GHz Tracking Generator Assembly" on page 279
"A3 IF Assembly" on page 281
"A4 Processor Assembly" on page 283
"A4A1 and A4A2 Flash and DRAM SIMM" on page 285
"A4MAU58 Battery" on page 286
"A5 Power Supply" on page 287
"A5B1 Fan" on page 289
"A6 Floppy Drive and Speaker Assembly" on page 291
"A7 Motherboard Assembly" on page 293
"Card Cage Assemblies" on page 296, which includes:

- "FM Demod, SIO, GPIB, RS-232, Noise Source Driver" on page 296
- "Digital Demod Assemblies Replacement" on page 298

"A8 1.5 GHz RF Assembly" on page 304
"A8 3.0 GHz RF Assembly" on page 307
"RF Subassemblies" on page 311, which includes:

- "A8A1 OCXO Precision Frequency Reference" on page 311
- "A8A4 LO Amp/IF Switch Assembly" on page 312
- "A8A5 Input Attenuator" on page 313
- "A8A6 YIG-Tuned Filter/Mixer" on page 315
- "A8A2 Second Converter" on page 317
- "RF Input Connector" on page 319
- "1.5 GHz RF Input Connector" on page 321

# Instrument Outer Case

**Figure 6-2** **Outer Case, Rear Frame Removal**

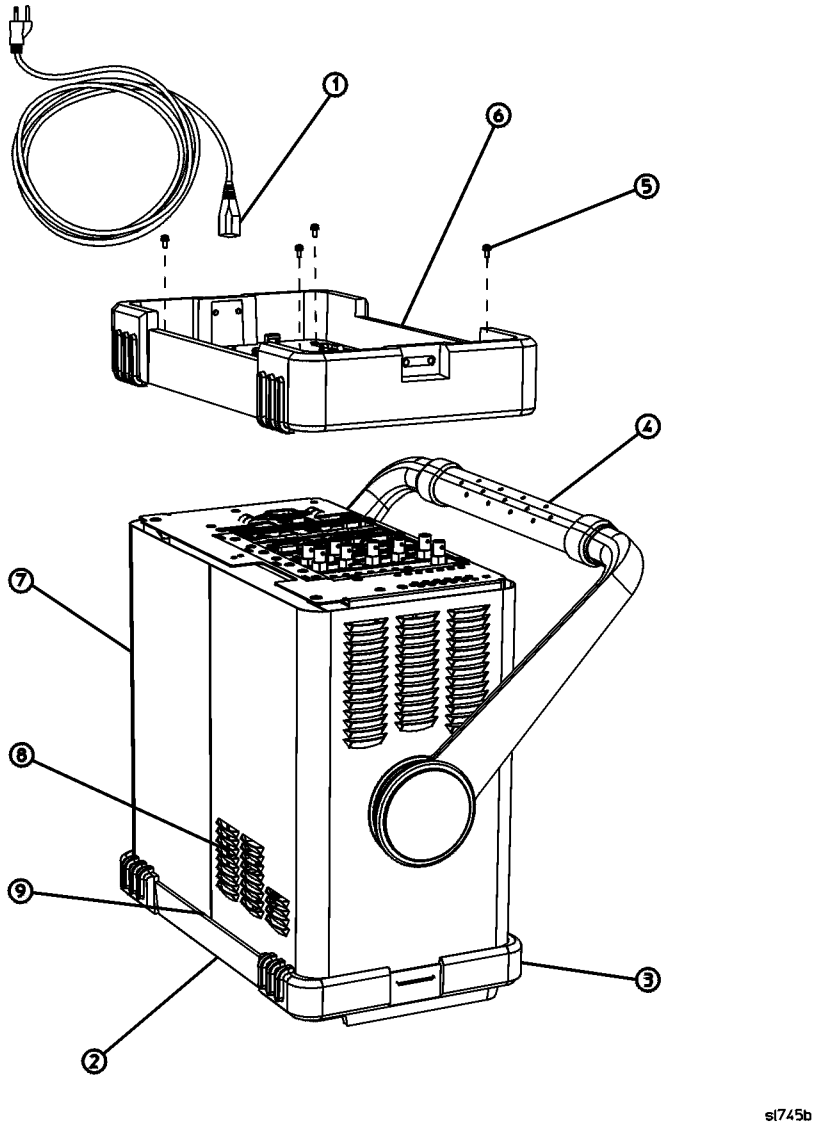

## Removal

1. Referring to Figure 6-2 disconnect the spectrum analyzer from ac power **(1)**.
2. Remove any adapters or cables **(2)** connected to the front frame.
3. Carefully place the analyzer on the work surface with the front frame **(3)** facing down.
4. Position the handle **(4)** as shown.
5. Remove the four screws **(5)** that hold the rear frame and outer case in place.
6. Remove the rear frame **(6)**.
7. Pull the outer cover off towards the rear of the analyzer.

## Replacement

1. Referring to Figure 6-2, disconnect the spectrum analyzer from ac power **(1)**.
2. Remove any adapters or cables **(2)** connected to the front frame.
3. Carefully place the spectrum analyzer on the work surface with the front frame **(3)** facing down.
4. Replace the analyzer outer case, matching the grill **(8)** on the bottom of the case to the bottom of the analyzer.
5. Fit the leading edge of the case completely into the slot **(9)** on the back of the front frame assembly.
6. Replace the rear frame assembly **(6)** using the four screws **(5)** to fasten the rear frame to the analyzer. Tighten them to 21 inch-pounds.

# Chassis Cover

**Figure 6-3** **Chassis Cover Removal**

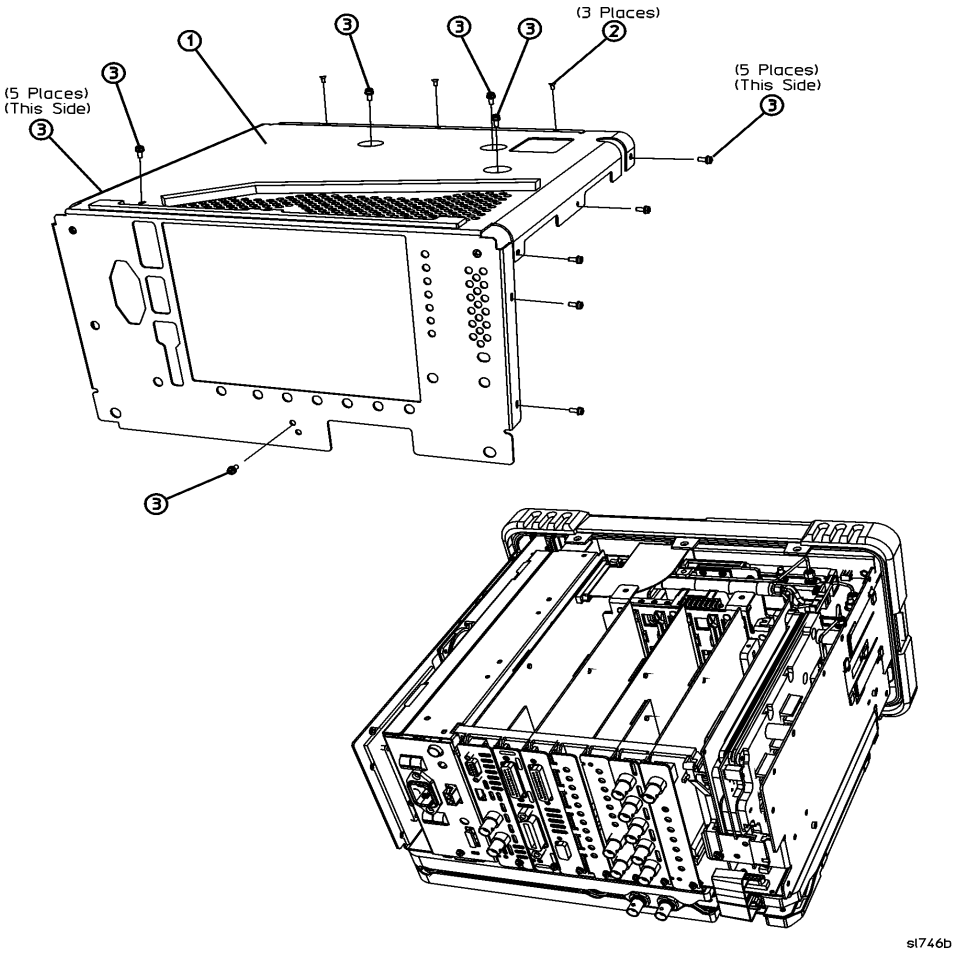


## Removal

1. If you haven't already done so, remove the instrument outer case. Refer to the removal procedure "Instrument Outer Case" on page 250.
2. Lay the analyzer flat as shown in Figure 6-3.
3. Remove the 17 screws **(2)** and **(3)** attaching the chassis cover **(1)** to the chassis. Note that the number of screws attaching the chassis cover may vary with option mixes.
4. The chassis cover can now be removed from the chassis.

## Replacement

1. Position the chassis cover **(1)** over the analyzer as shown in Figure 6-3, then lower onto the analyzer.
2. Replace the 17 screws **(2)** as **(3)** shown and tighten them to 9 inch-pounds.
3. Replace the outer case. Refer to the replacement procedure "Instrument Outer Case" on page 250.

# A1 Front Frame Assembly

**CAUTION** Use ESD precautions when performing this replacement procedure.

## Extension

The A1 front frame assembly can be extended from the analyzer without detaching any connections.

**Figure 6-4** **A1 Front Frame Assembly Removal**

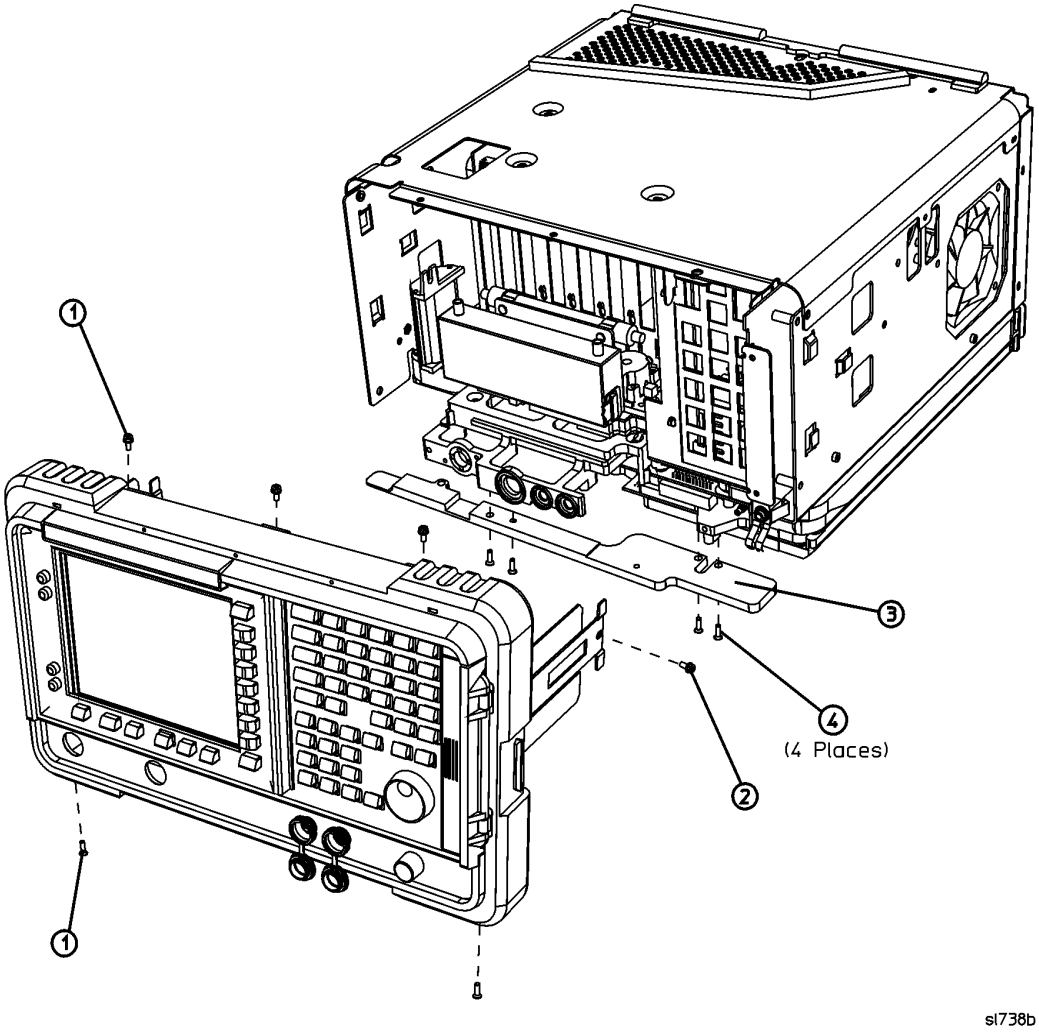


1. Remove the instrument outer case. Refer to the removal procedure "Instrument Outer Case" on page 250.
2. Refer to Figure 6-4. With the analyzer still on its face, remove the five screws **(1)**, two on the bottom side and three on the top of the analyzer, that secure the

front frame to the RF assembly and chassis cover.

3. Place the analyzer with the top side facing up and remove the remaining two screws **(2)** that secure the front frame subpanel to the chassis.
4. Slide the front frame forward until it catches on the tabs on the sides of the chassis.

## Removal

Refer to Figure 6-4. To completely remove the A1 front frame assembly, complete the "Extension" procedure, then continue with the following steps:

**Figure 6-5 Front Frame Ribbon Cable**

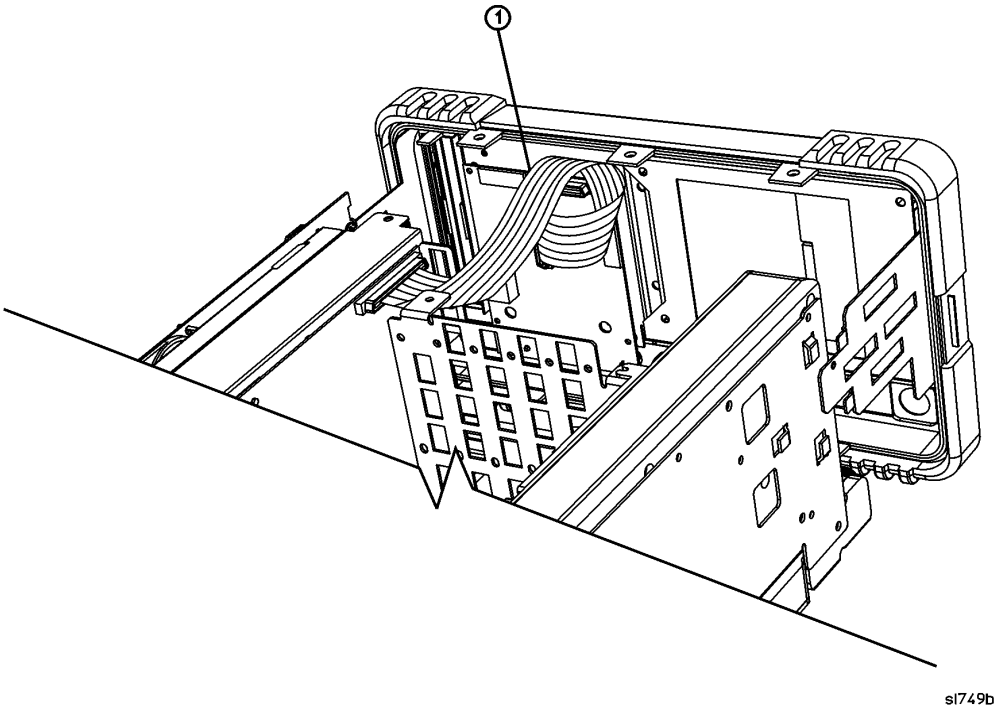


1. Refer to Figure 6-5. Disconnect the ribbon cable **(1)** from the A1A1 front panel interface board.
2. Carefully pull the sides of the front frame subpanel away from the chassis and over the tabs on the chassis.
3. Slide the front frame forward to disengage from the chassis assembly.

## Replacement

1. Align the A1 front frame subpanel rails with the chassis as shown in Figure 6-4.
2. Refer to Figure 6-5. Connect the ribbon cable **(1)** to the front frame assembly.
3. Carefully slide the front frame toward the chassis, assuring the ribbon cable is not pinched between assemblies, and the RF input connector lines up correctly with the opening in the front frame.

**NOTE** Make sure the water seal is still in place around the input connector (and around the A2 tracking generator connector if the analyzer is an Option 1DN or 1DQ) before reinstalling the front frame assembly.

4. Refer to Figure 6-4. Replace the screws **(1)** that secure the front frame to the chassis. Tighten them to 9 inch-pounds.
5. Replace the outer case. Refer to the replacement procedure for the "Instrument Outer Case" on page 250.
6. Refer to Table 7-2 on page 330 for the related adjustments and performance verification tests required for each assembly.

# Nameplate

## Removal and Replacement

1. Remove the existing nameplate **(1)** as shown in Figure 6-6.
2. Clean the surface **(2)** of any adhesive residue.
3. Peel the backing **(3)** off the new nameplate.
4. Place the new nameplate **(4)** as shown.

**Figure 6-6 Nameplate Replacement**

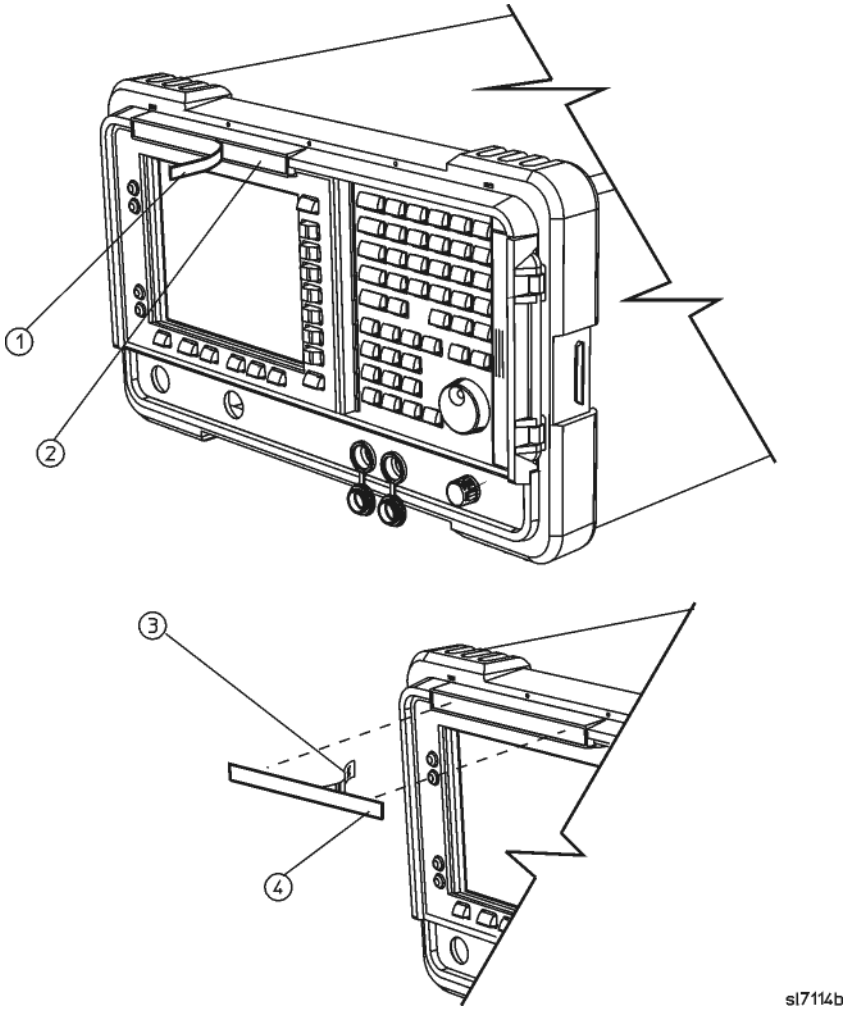

# Connector Label

**CAUTION** Use ESD precautions when performing this replacement procedure.

## Removal

1. Remove the instrument outer case. Refer to the removal procedure "Instrument Outer Case" on page 250.
2. Remove the front frame assembly. Refer to the removal procedure "A1 Front Frame Assembly" on page 254.
3. Remove the volume and RPG knobs. Refer to the removal procedure "A1A1 Front Panel Interface Board" on page 265.

**TIP** It is possible to perform this procedure without completely removing the front panel interface board. You can remove the knobs **(1)**, the two lower screws **(2)**, and loosen the two top screws **(3)** 2 turns, just so the knob shafts clear the front panel as shown in Figure 6-7.

4. If the analyzer does not have a tracking generator, remove the hole plug for the RF OUT connector.
5. Remove the two connector covers from the front panel by pinching them from the sides **(4)** and removing them through the front of the front frame assembly. See Figure 6-7.
6. Peel off the old connector label **(1)** loosening any residual adhesive with a sharp knife or razor blade as you go. See Figure 6-8.

**Figure 6-7 Connector Covers**

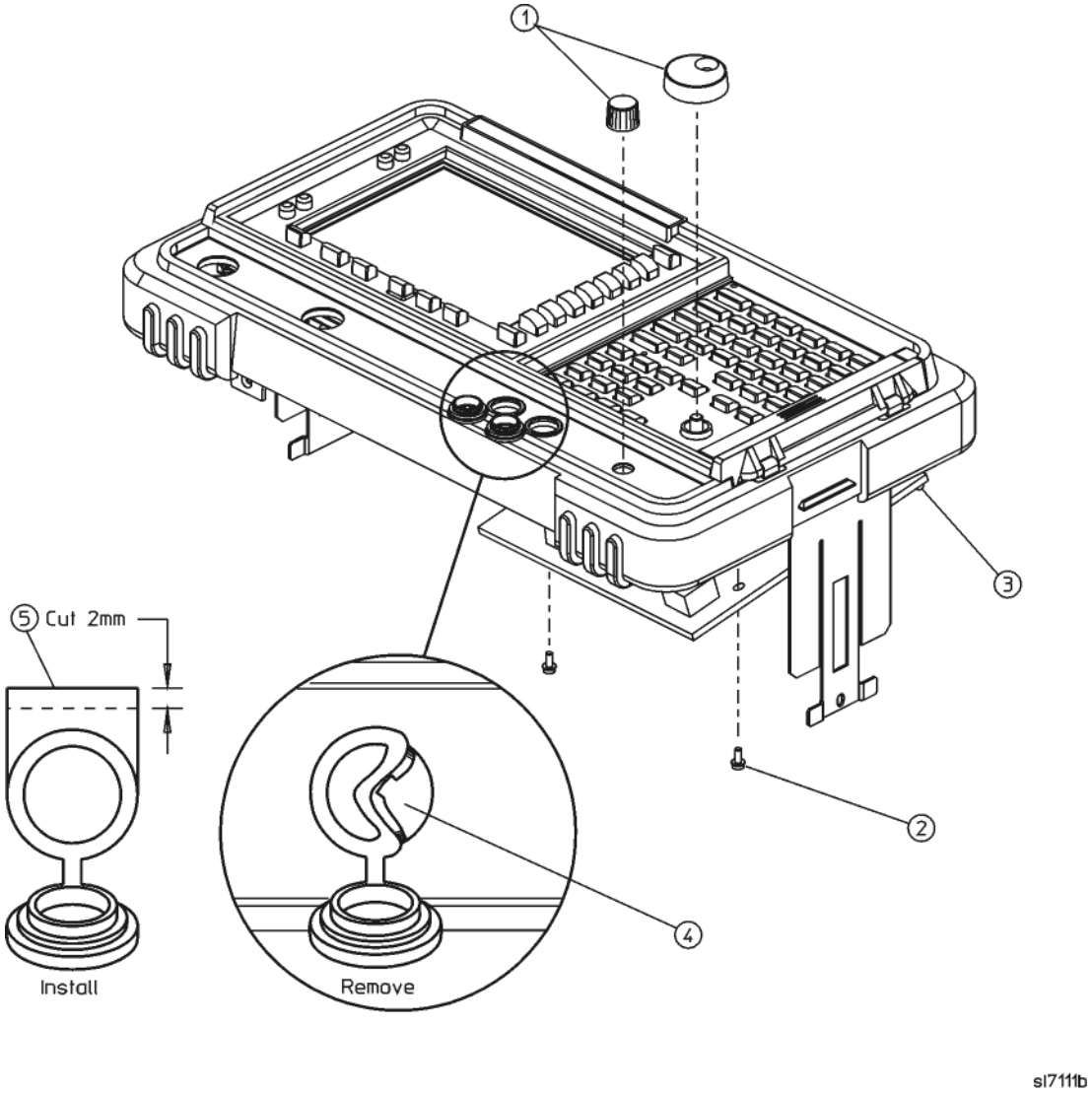

## Installation

Before installing the new connector label, make sure the surface is free from any adhesive residue left over from the old label. Failure to do so may result in an uneven (lumpy) appearance of the new label.

1. Peel the backing **(2)** off the new label as show in Figure 6-8.
2. Align and install the label by placing a finger in the RF OUT and VOLUME holes. Observe the alignment of the INPUT and PROBE POWER holes **(3)**.

**Figure 6-8 Connector Label Removal and Installation**

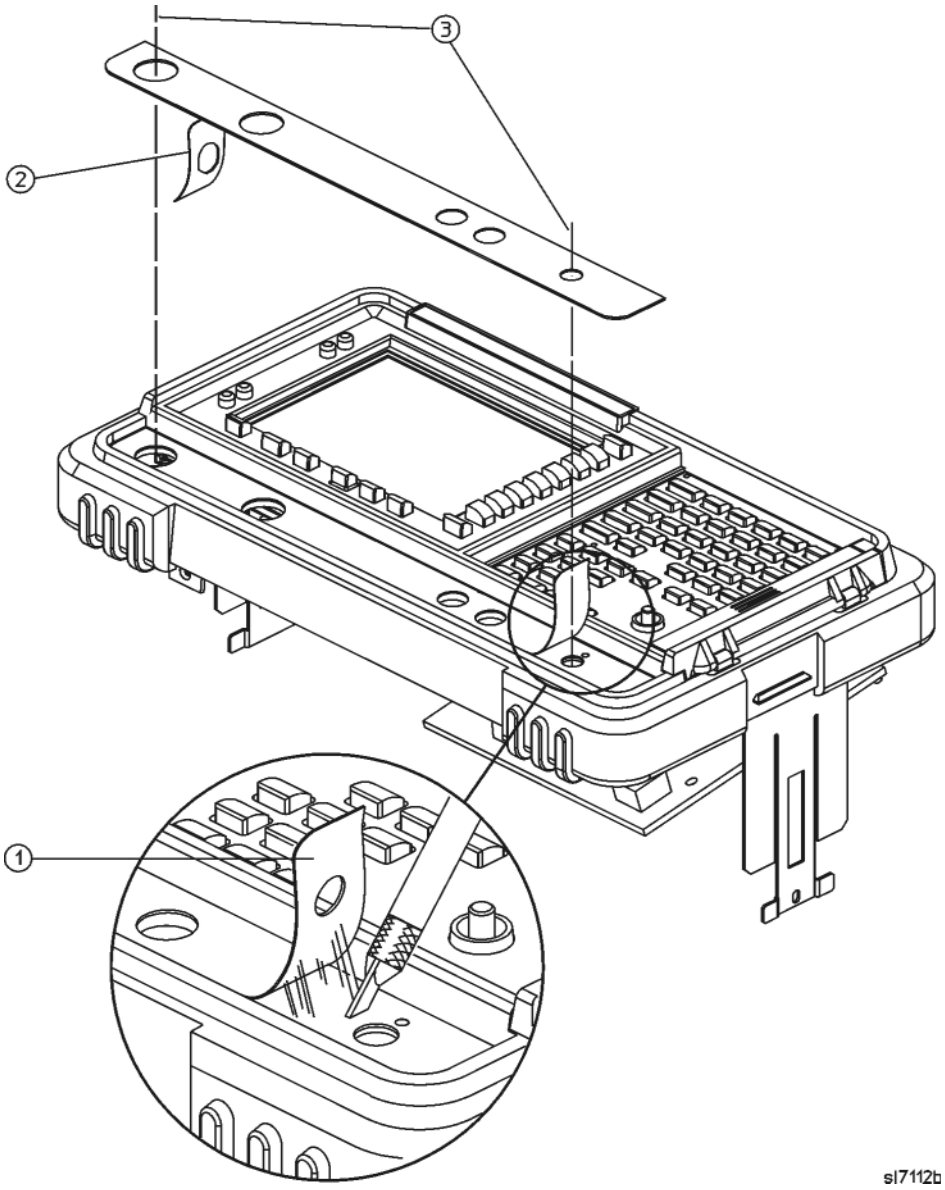

**TIP** It may be helpful to trim off about 2 mm of the tabs **(5)** on the connector covers prior to reinstalling them. This will help in aligning the covers. See Figure 6-7.

3. Reinstall the two connector covers from the front panel by pinching them from the sides **(4)** and installing them through the front of the assembly. See Figure 6-7.
4. Align the connector covers so they open downward as shown.

## Replacement

1. Re-install or re-attach the front panel interface board. Refer to the replacement procedure "A1A1 Front Panel Interface Board" on page 265.
2. Inspect the ribbon cables to the front panel interface board to ensure they have not come loose.
3. Replace the RPG and volume knobs. It may be helpful to add a drop of isopropyl alcohol or water to the RPG to make it easier to press on the shaft.
4. Re-install the front frame assembly. Refer to the replacement procedure "A1 Front Frame Assembly" on page 254.
5. Re-install the instrument outer case. Refer to the replacement procedure "Instrument Outer Case" on page 250.

# Front Frame Subassemblies

In order to remove any of the following subassemblies, it is necessary to remove the A1 front frame assembly from the main chassis. Refer to the removal procedure "A1 Front Frame Assembly" on page 254.

After the subassembly is replaced, reconnect the front frame to the chassis. Refer to the replacement procedure for the "A1 Front Frame Assembly" on page 254.

Refer to Table 7-2 in Chapter 7 for the related adjustments and performance verification tests required for each assembly.

**CAUTION** Use ESD precautions when performing the following replacement procedures.

## A1A2 Display

**Figure 6-9** **A1A2 Display Replacement**

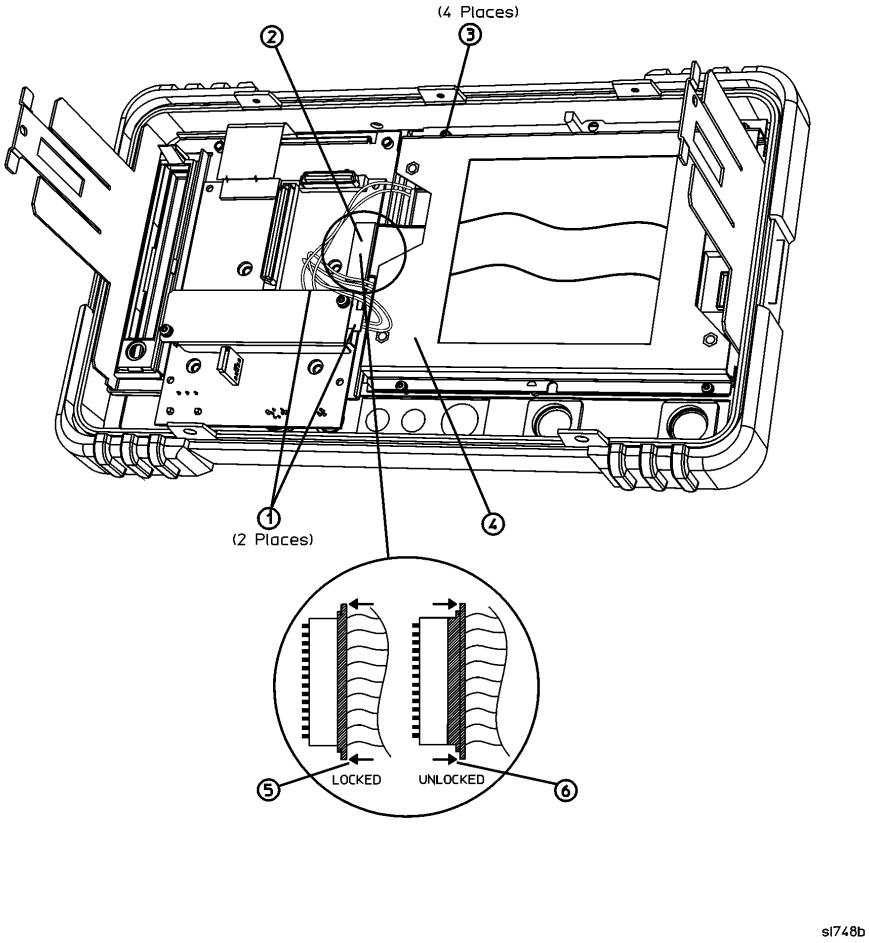

### Removal

Refer to Figure 6-9 for the following procedure.

1. Place the front frame assembly face down on the work surface.
2. Disconnect the two 2-wire backlight cables **(1)** from the front panel interface inverter board.
3. Disconnect W3 ribbon cable **(2)** from the front panel interface board.

**CAUTION** The W3 display ribbon cable connector **(2)** is delicate. With a small screwdriver or similar tool, gently push the lock tabs out from the back of the connector. Excessive force on the locking tab can break the retaining clips, and if broken, board replacement will be necessary.

4. Remove the four screws **(3)** securing the display (in a bracket) **(4)** to the front frame.
5. Carefully lift the display out of the front frame assembly.

### Replacement

**CAUTION** The display monitor comes with a protective plastic sheet over the glass. Remove this plastic very slowly to avoid damage due to ESD.

**CAUTION** The surface of the display is very easily scratched. Avoid touching it with your bare hands or other objects. Use a blower to remove any dust from the display surface.

1. Clean the inside of the lens that is attached to the front frame.
2. Refer to Figure 6-10. Place the display **(3)** into the front frame assembly. Make sure that the cables are not pinched between the display and the front frame, and the W3 ribbon cable is not folded.
3. Replace the four screws **(17)** that secure the display bracket to the front frame. Tighten them to 9 inch-pounds.
4. Connect the W3 display ribbon cable **(2)** to the front panel interface board.

**TIP**

An easy way to insert this delicate cable into the connector is to place your finger on the cable, in the center of the LCD display, and gently slide the cable toward the connector until they align. Then, providing guidance with the other hand as necessary, slide the cable until the end slips into the connector.

Ensure the cable end is seated completely and is aligned straight within the connector body.

Continue to hold the cable in place with your finger, and with the other hand gently press the locking tabs **(5)** into place. See Figure 6-9.

**NOTE**

If you experience display problems, check this connection.

5. Connect the two backlight cables **(1)** to the front panel interface inverter board.

**Figure 6-10 Front Frame Assembly Parts**

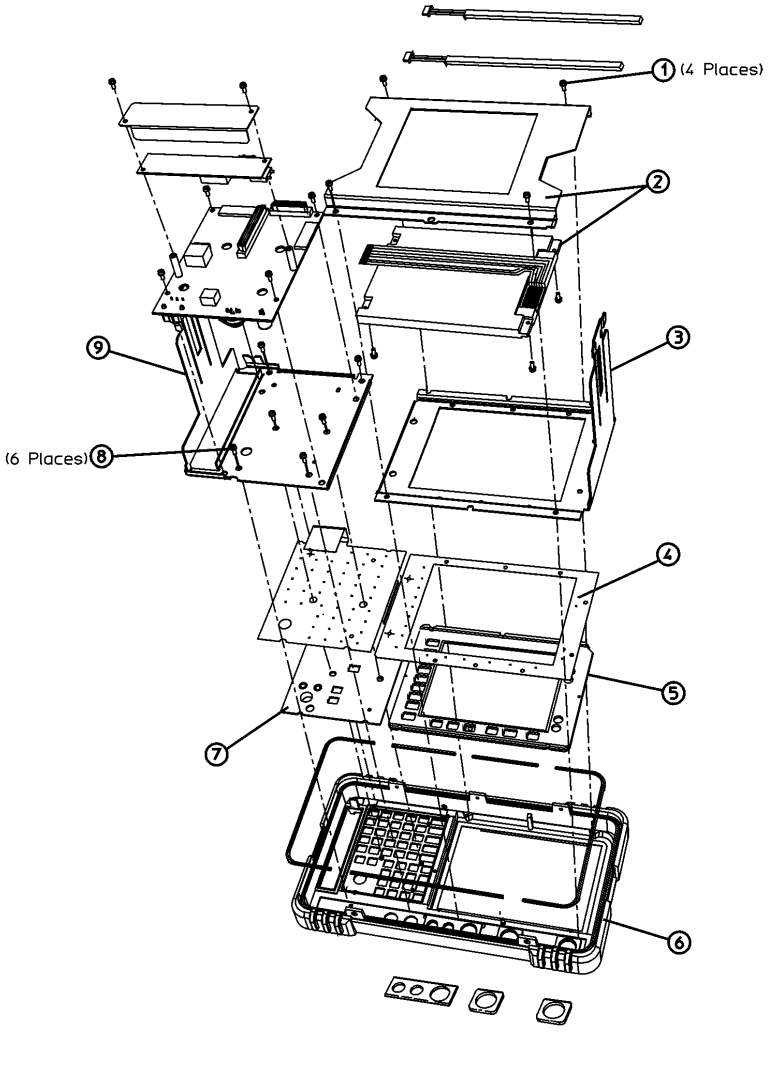

## A1A1 Front Panel Interface Board

### Removal

1. Refer to Figure 6-11. Remove the media door **(1)** from the front panel.
2. Insert a flat-blade screwdriver under the RPG knob **(2)** as shown in Figure 6-11, and twist it to remove the knob.

**Figure 6-11** **Removing the Knobs**

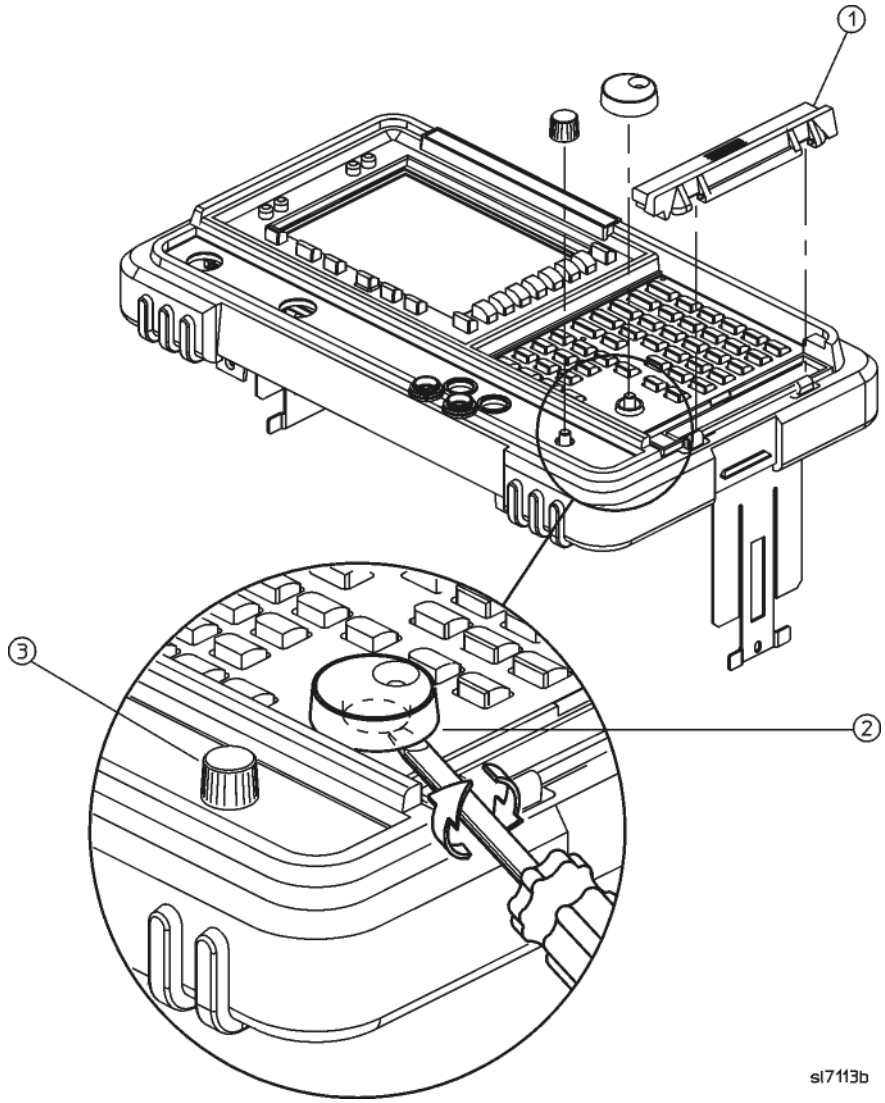


3. Grasp the volume knob **(3)** and pull it off.
4. Refer to Figure 6-9. Disconnect the two 2-wire backlight cables **(1)** from the inverter board.
5. Disconnect the display ribbon cable **(2)** and the keypad ribbon cable from the front panel interface board.

**CAUTION** The display ribbon cable connector **(2)** is delicate. Refer to Figure 6-9. With a small screwdriver or similar tool, gently push the lock tabs **(6)** out from the back of the connector. Excessive force on the locking tab will break the retaining clips, and if broken, board replacement will be necessary.

6. Refer to Figure 6-10. Remove the four screws that secure the A1A1 front panel interface board **(13)** to the front frame.
7. Remove the front panel interface board from the front frame assembly.

**NOTE** There is a water-seal gasket placed around the volume control shaft that will need to be repositioned during the replacement procedure.

**Replacement**

1. Place the front panel interface board **(13)** in the correct position in the front frame assembly. Make sure the water seal is in place around the volume shaft.
2. Replace the four screws that secure the board to the front frame. Tighten them to 9 inch-pounds.
3. Connect the W3 display ribbon cable **(2)** to the front panel interface board.

**TIP** An easy way to insert this delicate cable into the connector is to place your finger on the cable, in the center of the LCD display, and gently slide the cable toward the connector until they align. Then, providing guidance with the other hand as necessary, slide the cable until the end slips into the connector.

Ensure the cable end is seated completely and is aligned straight within the connector body.

Continue to hold the cable in place with your finger, and with the other hand gently press the locking tabs **(5)** into place.
See Figure 6-9.

**NOTE** If you experience display problems, check this connection.

4. Reconnect the two 2-wire backlight cables **(1)** to the inverter board, making sure that the cables are dressed away from the openings for the control knobs.
5. Press the volume and RPG knobs onto their control shafts.

## Front Panel RPG

**Removal/Replacement**

1. Remove the front panel interface board. Refer to the removal procedure "A1A1 Front Panel Interface Board" on page 265.
2. Unsolder the appropriate RPG and remove it from the front panel interface board.

3. Place the new RPG in the correct position and resolder the leads.
4. Replace the front panel interface board. Refer to the replacement procedure "A1A1 Front Panel Interface Board" on page 265.

## Keypad/Flex Circuit

### Removal

1. Remove the RPG knobs.

**TIP** To facilitate knob removal, slide any flat flexible material (such as a folded business card) under the knob and pry upward.

2. Remove the front panel interface board. Refer to the removal procedure "A1A1 Front Panel Interface Board" on page 265.
3. Refer to Figure 6-10. Remove the four screws **(1)** that secure the display to the front frame.
4. Remove the display assembly **(2)** then the support bracket **(3)**.
5. Remove the 6 screws **(8)** securing the subpanel assembly (9) to the front frame **(6)**.
6. Remove the subpanel assembly **(9)**.
7. Lift out the keypad/flex circuit **(4)** and the main keypad **(7)**. Be careful to avoid touching the keypad contacts with your fingers.

### Replacement

1. Refer to Figure 6-10. Place the main keypad **(7)** so it lays flat in the front frame **(6)**. Be careful to avoid touching the keypad contacts with your fingers.
2. Lay in the flex circuit **(4)** so it aligns with the pegs on the front frame and lays flat. A small amount of circuit ripple will be unavoidable.
3. Replace the subpanel **(9)**, and secure with the six screws **(8)**. Tighten them to 9 inch-pounds.

**NOTE** If you are putting in a new flex circuit, it will need to be preformed in order to fit properly in the front frame. Slightly bend the circuit along the slits in two places between the main key section and the display section to conform to the contours of the front frame. Be careful to not bend the circuit too much (no more than a 90° angle), and do not crease it. This can damage the traces in the flex circuit.

4. Replace the support bracket **(3)**, along with the display **(2)** and secure with the four screws **(1)**. Tighten them to 9 inch-pounds.
5. Replace the front panel interface board. Refer to the replacement procedure "A1A1 Front Panel Interface Board" on page 265.
6. Replace the RPG knobs.

## Lens/Keypad Assembly

### Removal

**NOTE** The lens/keypad assembly is pressed into place, using a strong adhesive instead of hardware. It is made of a plastic material and will bend but not break.

1. Remove the keypad/flex circuit. Refer to the removal procedure "Keypad/Flex Circuit" on page 267.
2. To remove the lens/keypad from the front frame, apply pressure from the front side. Using both thumbs, press in the corner of the lens as shown in Figure 6-12 until it pops out.

**Figure 6-12 Lens Removal**

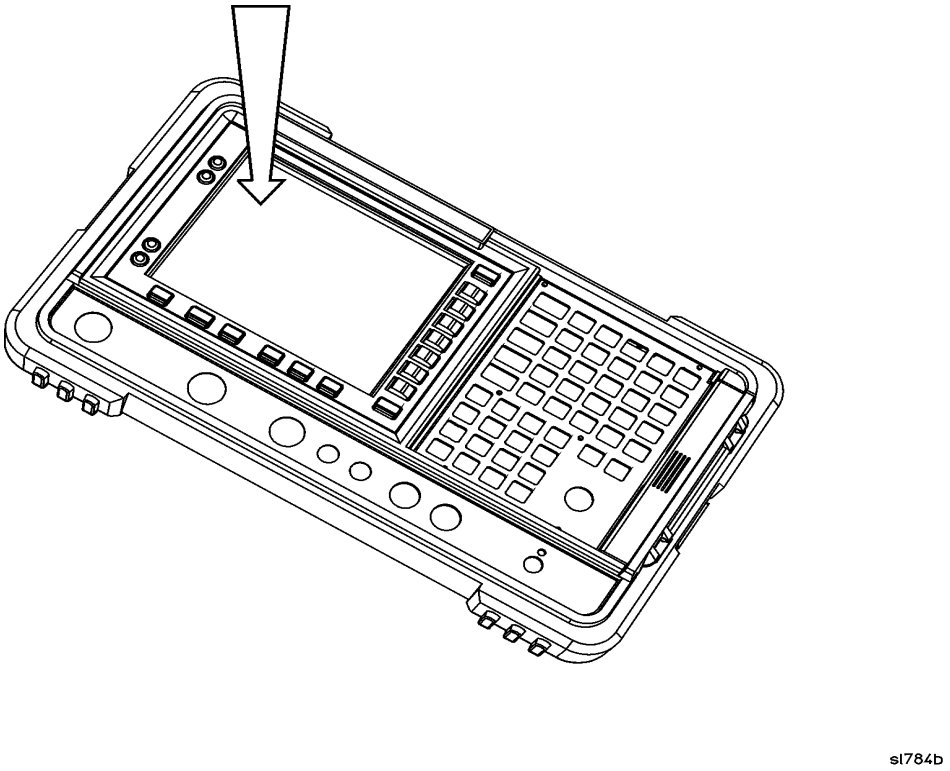


### Replacement

1. Remove the paper covering the adhesive on the lens/keypad assembly.
2. Carefully fit the new lens/keypad assembly into place in the front frame. Press along the edges of the lens from the inside to adhere it to the front frame.
3. Make sure the inside of the lens is clean from contaminants such as lint and fingerprints before proceeding.
4. Replace the main keypad, flex circuit, and subpanel assembly (with the display

and front panel interface board attached). Refer to the replacement procedure "Keypad/Flex Circuit" on page 267.

5. Replace the front panel interface board. Refer to the replacement procedure "A1A1 Front Panel Interface Board" on page 265.
6. After the front frame is reattached to the chassis, remove the protective plastic covering from the lens.

## Display Backlight

### Removal

1. Remove the display. Refer to the removal procedure "A1A2 Display" on page 262.
2. Refer to Figure 6-13. Locate the two 2-wire connectors on the display. These are the backlight assemblies **(1)**. Carefully press on the opposite end from the wires to slide a backlight assembly partially out of the display **(2)**. Once the end of a backlight casing is exposed, you can pull it straight out from the display.

**Figure 6-13** **Display Backlight Replacement**

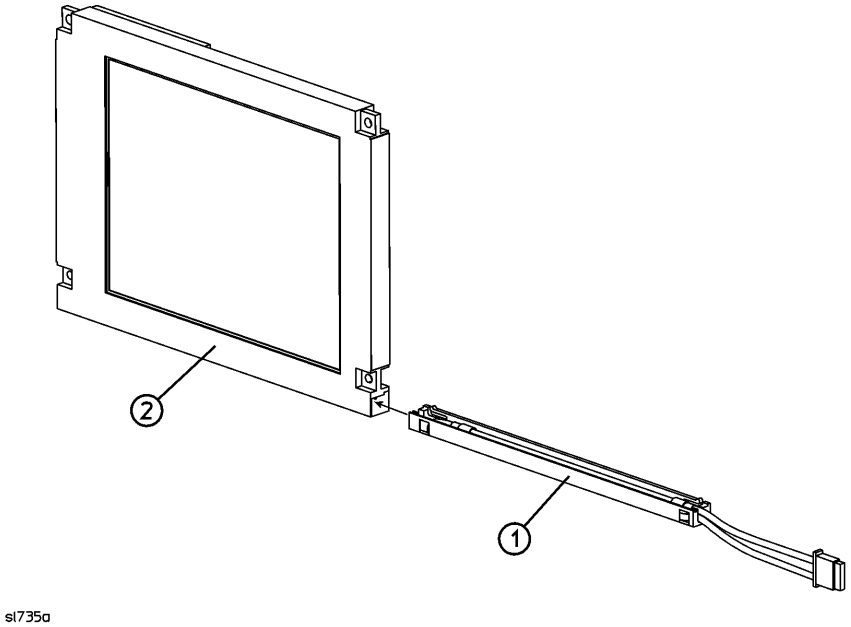


### Replacement

**NOTE** Do not touch the bulb encased in the plastic backlight assembly.

1. Insert the new backlight assembly **(1)** by sliding it into the display, non-wired end first, taking care not to force it. It is keyed so it will only fit properly one way. Slide it all the way in to the end of the casing.

**NOTE** It is recommended that both backlights be replaced at the same time, even though only one has failed. The remaining (functioning) backlight will likely fail shortly after the first backlight fails.

2. Replace the display. Refer to the replacement procedure "A1A2 Display" on page 262.

**Media Door/Bezel**

1. The media door snaps on and off of the media bezel.
2. Refer to Figure 6-14. To remove the media bezel (1), it is necessary to remove the front frame. Refer to the removal procedure "A1 Front Frame Assembly" on page 254.
3. The bezel also snaps into place. It can be removed by pressing the tabs together from the inside and pushing the bezel out of the front frame.

**Figure 6-14** **Media Door/Bezel**

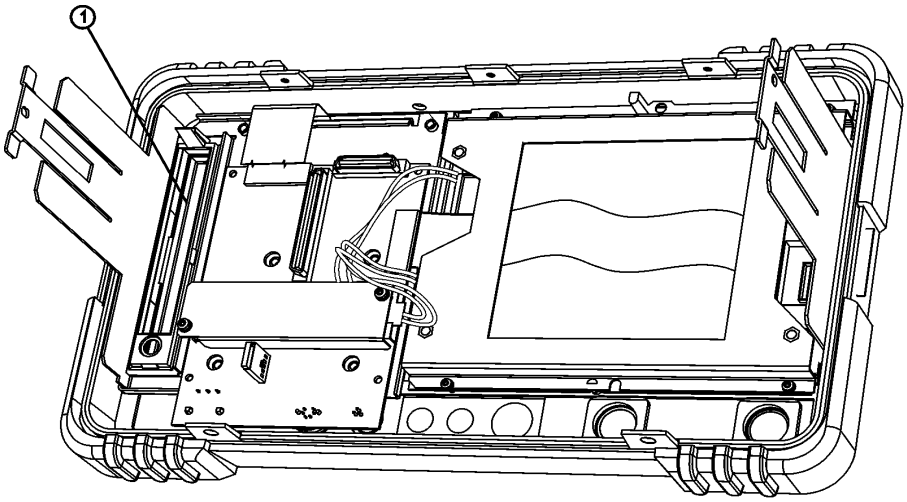

# Vibration Support Bar

## Removal

1. Referring to Figure 6-15, loosen, but do not remove, all nine of the screws **(1)** securing the boards and blank panels at the rear of the chassis.

**CAUTION** The vibration support bar is fragile. Use caution to avoid breakage when removing it.

2. On the vibration support bar, press in the locking tabs **(2)** and rotate the bar **(3)** upward. Remove the bar by sliding it out of the holes in each of the assemblies and lifting it up.

**Figure 6-15 Removing the Vibration Support Bar**

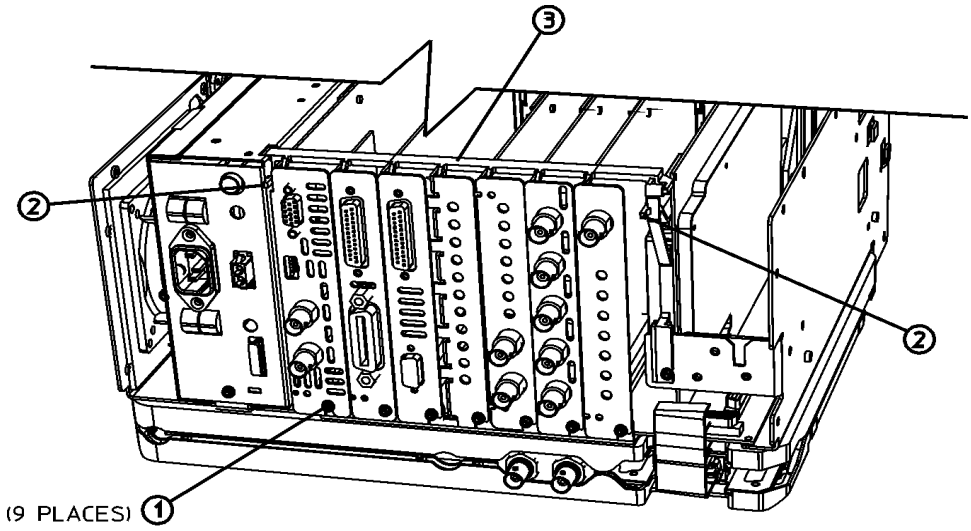


## Replacing the Vibration Support Bar

1. Referring to Figure 6-16, replace the vibration support bar **(1)** as follows:
   a. Position the vibration support bar **(1)** as shown and insert the hook **(2)** into the A3 IF assembly's support arm.
   b. Engage each hook **(3)** of the other assemblies or blank panels.
   c. After you position each of the assemblies or blank panels, rotate **(4)** the support bar to lock them in place.
   d. Referring to Figure 6-17, make sure that the tab **(1)** is positioned in the slot of the power supply chassis and the vibration bar is fully seated and locked **(2)** into position.

**CAUTION** The vibration support bar can easily be broken if it is forced. Install it with care.

2. Refer to Figure 6-15. Tighten all the screws that were loosened in the removal procedure to 9 inch-pounds.

**Figure 6-16 Installing the Vibration Support Bar**

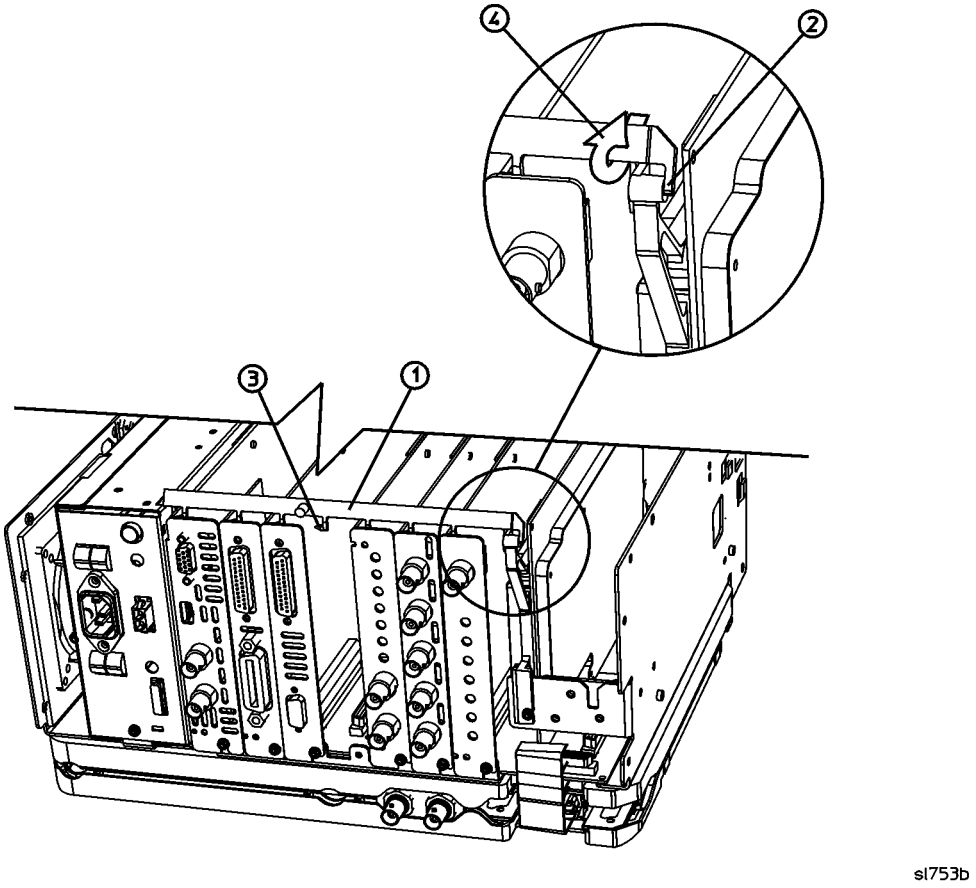

**Figure 6-17 Seating the Vibration Support Bar**

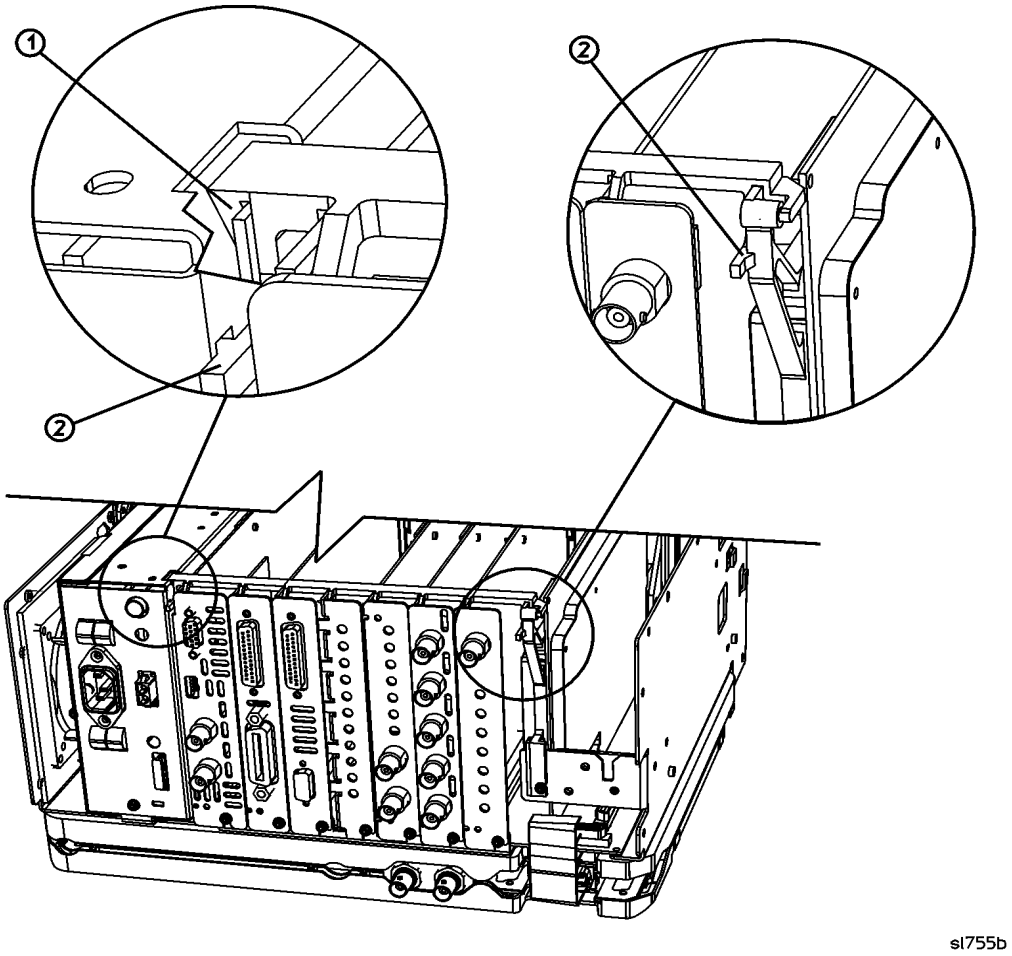

# A2 1.5 GHz Tracking Generator Assembly

(E4401B and E4411B)

**CAUTION** Use ESD precautions when performing this replacement procedure.

## Removal

1. Remove the analyzer chassis cover. Refer to the removal procedure "Chassis Cover" on page 252.
2. Extend the A1 front frame assembly. Refer to the extension procedure "A1 Front Frame Assembly" on page 254.
3. Remove the water seal from around the front of the tracking generator connector.
4. Refer to Figure 6-18. Remove the four screws **(1)**, (three from the side and one from the back), securing the tracking generator assembly to the chassis.
5. Carefully pull up on the tracking generator assembly to remove it from the motherboard connector.

**Figure 6-18** **A2 1.5 GHz Tracking Generator Hardware**

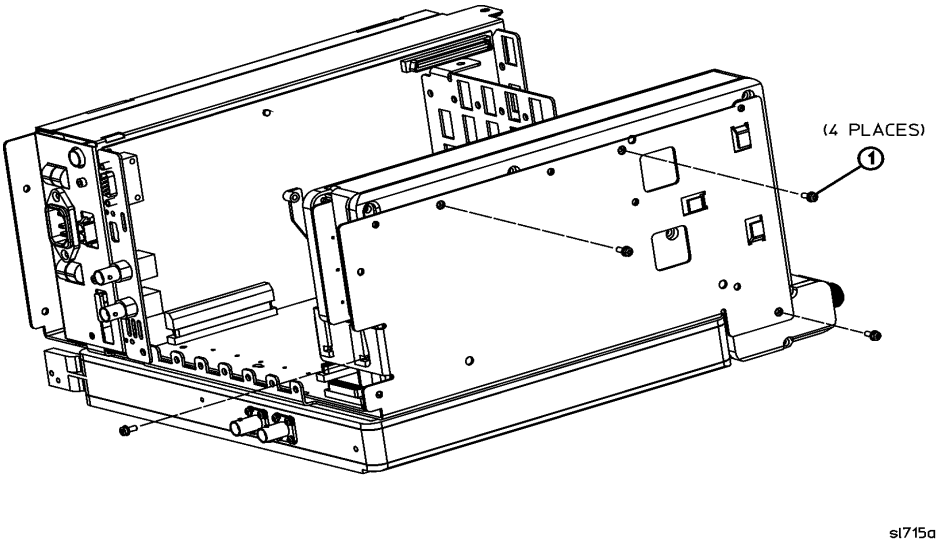


## Replacement

1. Carefully plug the tracking generator assembly into the motherboard.

2. Refer to Figure 6-18. Replace the four screws **(1)** that secure the tracking generator to the chassis. Tighten them to 9 inch-pounds.
3. Replace the water seal around the front of the tracking generator connector.
4. Reconnect the A1 front frame to the chassis. Refer to the replacement procedure "A1 Front Frame Assembly" on page 254.
5. Replace the chassis cover. Refer to the replacement procedure "Chassis Cover" on page 252.
6. Replace the outer case. Refer to the replacement procedure "Instrument Outer Case" on page 250.
7. Refer to Table 7-2 in Chapter 7 for the related adjustments and performance verification tests required for each assembly.

## Tracking Generator Boards

The removal and replacement of any of the three boards (RF board, control board, and output board) that make up the 1.5 GHz tracking generator assembly (T.G.) requires that the T.G. first be removed from the analyzer. Refer to the removal and replacement procedures "A2 1.5 GHz Tracking Generator Assembly" on page 274. After any board removal, refer to Table 7-2 in Chapter 7 for the related adjustments and performance verification tests required. For the following procedures, refer to Figure 6-19.

**CAUTION** Use ESD precautions when performing the following replacement procedures.

**Figure 6-19 Tracking Generator Board Replacement**

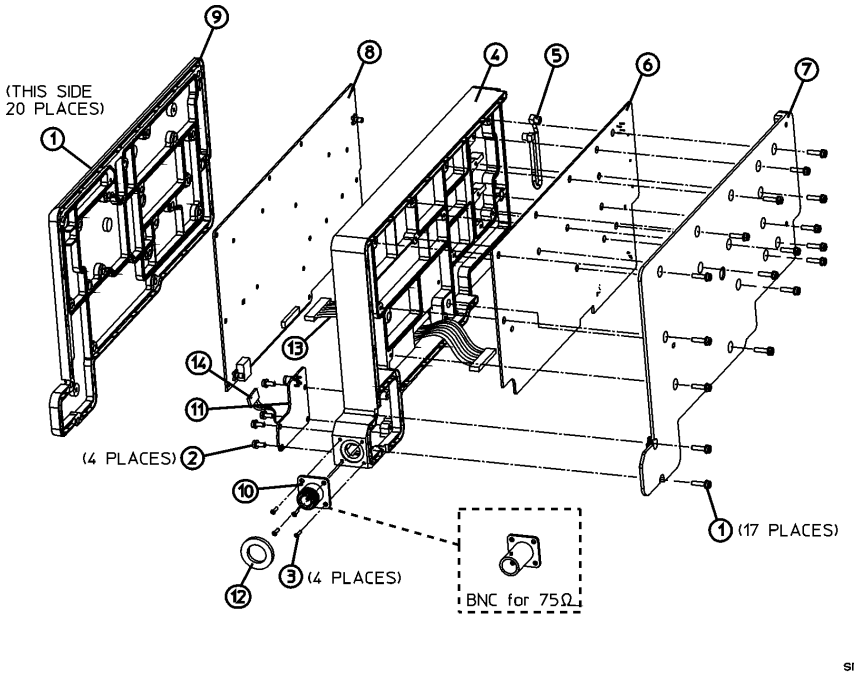

## Tracking Generator RF Board Removal

### Removal

1. Remove the 20 screws **(1)** that secure the RF shield **(9)** to the center shield **(4)**.
2. Unplug the output board wire harness **(14)** from the RF board **(8)**.
3. Carefully lift the RF board **(8)** straight away from the center shield to disconnect the connector on the output board **(11)**.
4. Disconnect the ribbon cable **(13)** from the RF board.
5. Disconnect the coaxial cable **(5)** from the RF board.

### Replacement

1. Plug in the ribbon cable **(13)** and the coaxial cable **(5)** into the RF board **(8)**.
2. Carefully position the RF board onto the center shield, ensuring no cables will be pinched between the shields. Press down to engage the connectors at the output board.
3. Plug the output board wire harness **(14)** into the RF board.
4. Replace the RF shield **(9)** with the 20 screws removed earlier. Tighten them to 13.5 inch-pounds.

## Tracking Generator Control Board Removal

### Removal

1. Remove the 17 screws **(1)** that secure the control shield **(7)** to the center shield **(4)**.
2. Unplug the ribbon cable **(13)** from the control board **(6)**.
3. Unplug the coaxial cable **(5)** from the control board.

### Replacement

1. Plug in the ribbon **(13)** and the coaxial cable **(5)** into the control board **(6)**.
2. Position the control board onto the center shield **(4)**, ensuring no cables will be pinched between the shields.
3. Replace the control shield **(7)** with the 17 screws removed earlier. Tighten them to 13.5 inch-pounds.

## Tracking Generator Output Board Removal

### Removal

1. Remove the 20 screws **(1)** that secure the RF shield **(9)** to the center shield **(4)**.
2. Remove the 17 screws **(1)** that secure the control shield **(7)** to the center shield **(4)**.
3. Unsolder the RF output connector **(10)**.
4. Unplug the wire harness **(14)** from the RF board **(8)**.
5. Carefully lift the RF board **(8)** straight away from the center shield to disconnect the connector on the output board **(11)**.
6. Remove the 4 screws **(2)** that secure the output board **(11)** to the center shield **(4)**.
7. Lift the output board from the center shield.

### Replacement

1. Place the output board **(11)** into the center shield **(4)**.
2. Carefully position the RF board **(8)** onto the center shield, ensuring no cables will be pinched between the shields. Press down to engage the connectors at the output board.
3. Replace the 4 screws securing the output board that were removed earlier. Tighten them to 9 inch-pounds.
4. Plug the wire harness **(14)** into the RF board.
5. Resolder the RF output connector **(10)** to the output board.
6. Replace the RF and control shields. Tighten all of the screws to 13.5 inch-pounds.

## 1.5 GHz Tracking Generator RF Output Connector

### Removal

1. Remove the 17 screws **(1)** that secure the control shield to the center shield.
2. Remove the water seal **(12)** from around the RF output connector **(10)**.
3. Remove the 4 screws **(3)** securing the connector to the center shield **(4)**.
4. Heat the connector center contact on the output board and pull the connector out gently.

### Replacement

1. Remove excess solder from the output board pad.
2. Fasten the new input connector to the center shield with the four screws **(3)** tightened to 9 inch-pounds.
3. Resolder the center conductor to the output board.
4. Replace the water seal **(12)** around the RF output connector.
5. Replace the 17 screws that secure the control shield to the center shield. Tighten them to 13.5 inch-pounds.

# A2 3.0 GHz Tracking Generator Assembly

(E4404B, E4405B, E4407B, and E4408B)

**CAUTION** Use ESD precautions when performing this replacement procedure.

## Removal

1. Remove the analyzer chassis cover. Refer to the removal procedure "Chassis Cover" on page 252.
2. Extend the A1 front frame assembly. Refer to the extension procedure "A1 Front Frame Assembly" on page 254.
3. Refer to Figure 6-20. Disconnect the SMB cable **(1)** and the SMA cable **(2)** from the tracking generator assembly.
4. Refer to Figure 6-21. Remove the five screws **(1)**, (four from the side and one from the back), securing the A2 tracking generator assembly **(2)** to the chassis.
5. Carefully pull up on the tracking generator assembly to remove it from the motherboard connector.

**Figure 6-20 A2 Tracking Generator Cables (E4404B, E4405B, E4407, and E4408B)**

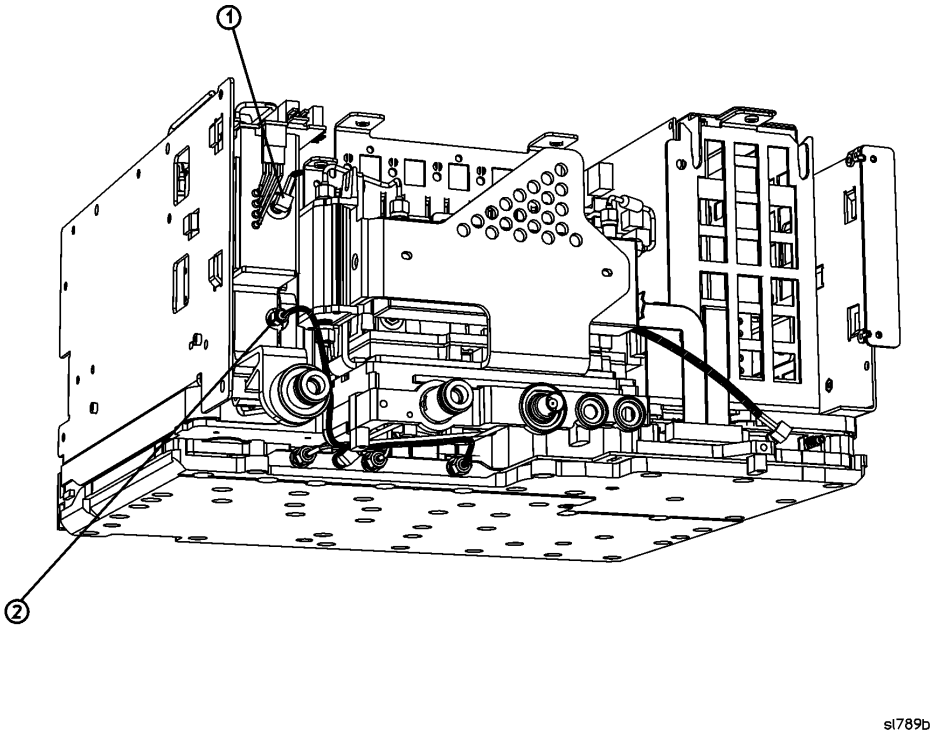

**Figure 6-21 A2 3.0 GHz Tracking Generator Hardware**

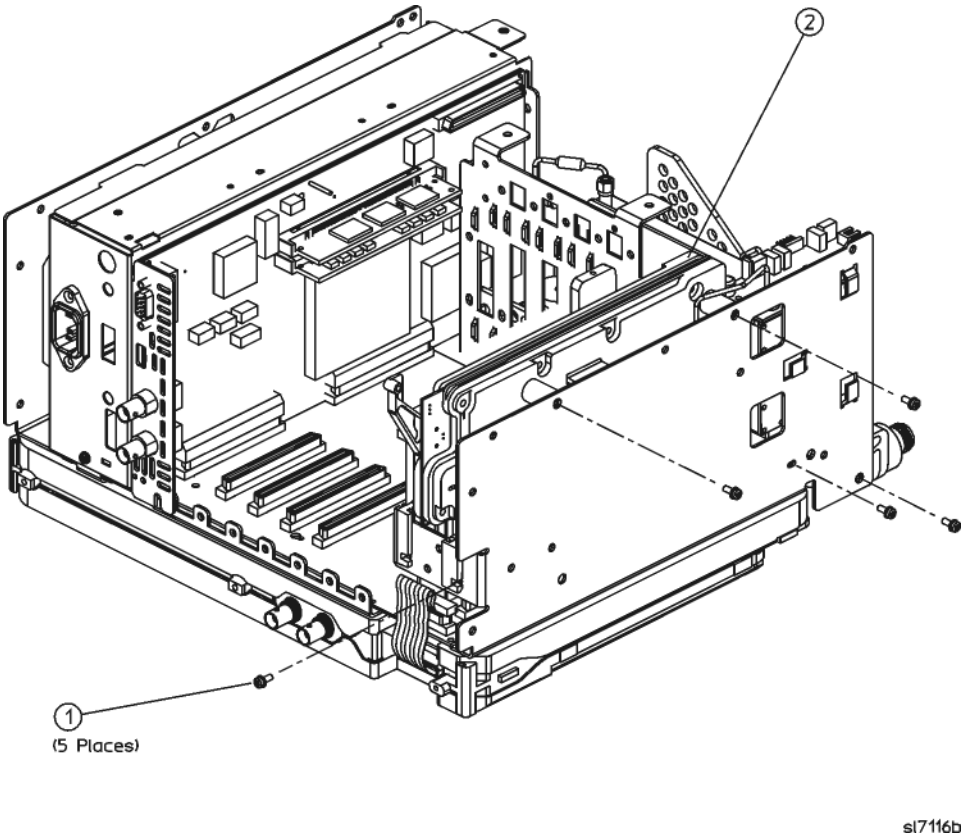


## Replacement

1. Refer to Figure 6-21. Carefully plug the tracking generator assembly **(2)** into the motherboard.
2. Refer to Figure 6-21. Replace the five screws **(1)** that secure the tracking generator to the chassis. Tighten them to 9 inch-pounds.
3. Refer to Figure 6-20. Reconnect the SMB cable **(1)** and the SMA cable **(2)** to the tracking generator assembly. Tighten the SMA connector to 10 inch-pounds.
4. Replace the water seal around the front of the tracking generator connector.
5. Reconnect the A1 front frame to the chassis. Refer to the replacement procedure "A1 Front Frame Assembly" on page 254.
6. Replace the chassis cover. Refer to the replacement procedure "Chassis Cover" on page 252.
7. Replace the outer case. Refer to the replacement procedure "Instrument Outer Case" on page 250.
8. Refer to Table 7-2 in Chapter 7 for the related adjustments and performance verification tests required for each assembly.

# A3 IF Assembly

**CAUTION** Use ESD precautions when performing this replacement procedure.

## Removal

1. Remove the analyzer chassis cover. Refer to the removal procedure "Chassis Cover" on page 252.
2. Remove the vibration support bar. Refer to the removal procedure "Vibration Support Bar" on page 271.
3. Refer to Figure 6-22. Remove the two screws **(1)** securing the A3 IF assembly to the chassis.
4. Disconnect the W2 **(2)** coaxial cable from the IF assembly.
5. Carefully lift the IF assembly to remove it from the motherboard connector.

**Figure 6-22** **A3 IF Assembly**

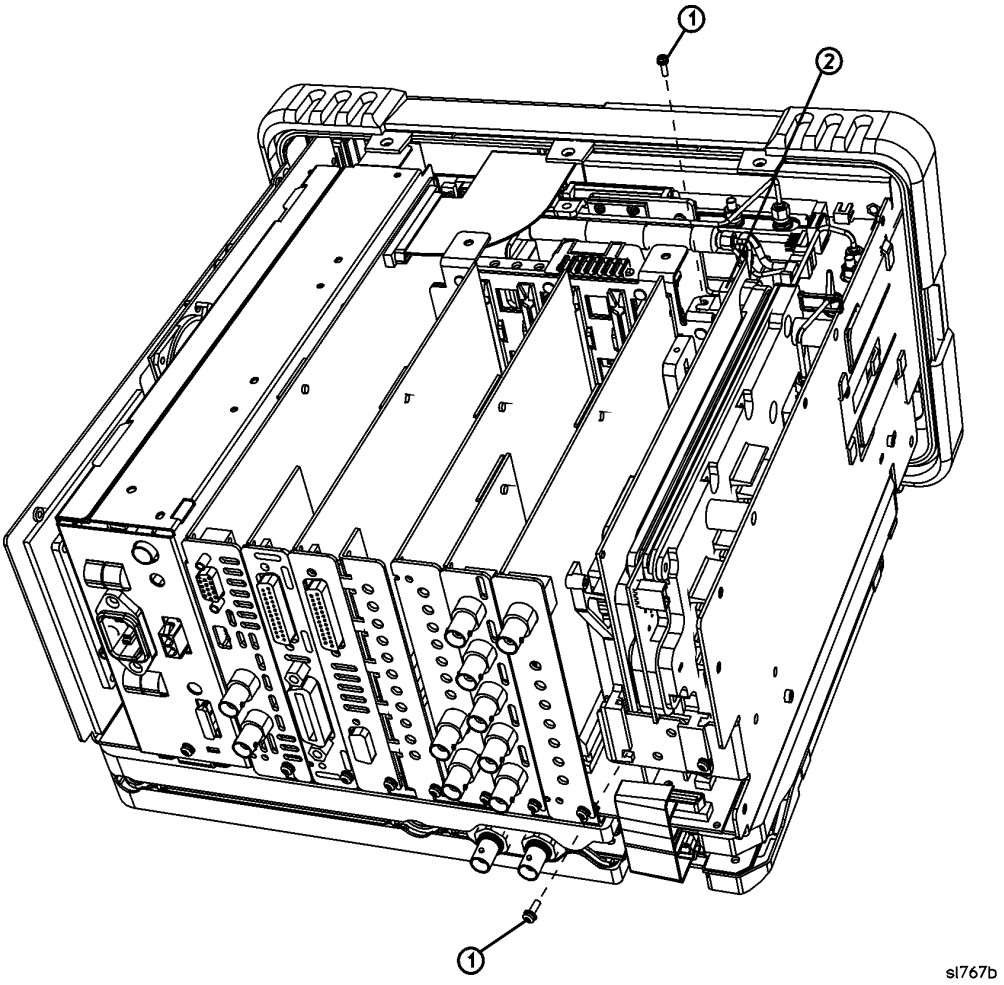


## Replacement

1. Carefully plug the IF assembly into the motherboard.
2. Refer to Figure 6-22. Replace the two screws **(1)** that secure the IF assembly to the chassis. Tighten them to 9 inch-pounds.
3. Connect the W2 **(2)** coaxial cable to the IF assembly.
4. Replace the vibration support bar. Refer to the replacement procedure "Vibration Support Bar" on page 271.
5. Replace the chassis cover. Refer to the replacement procedure "Chassis Cover" on page 252.
6. Replace the outer case. Refer to the replacement procedure "Instrument Outer Case" on page 250.
7. Refer to Table 7-2 on page 330 for the related adjustments and performance verification tests required for each assembly.

# A4 Processor Assembly

**CAUTION** Use ESD precautions when performing this replacement procedure.

## Removal

1. Remove the analyzer chassis cover. Refer to the removal procedure "Chassis Cover" on page 252.
2. Remove the vibration support bar. Refer to the removal procedure "Vibration Support Bar" on page 271.
3. Refer to Figure 6-23. Remove the single screw **(1)** securing the A4 processor assembly to the chassis.
4. Disconnect the front panel ribbon cable **(2)** from the processor assembly.
5. Carefully lift the processor assembly to remove it from the motherboard connector.

**Figure 6-23** **A4 Processor Assembly**

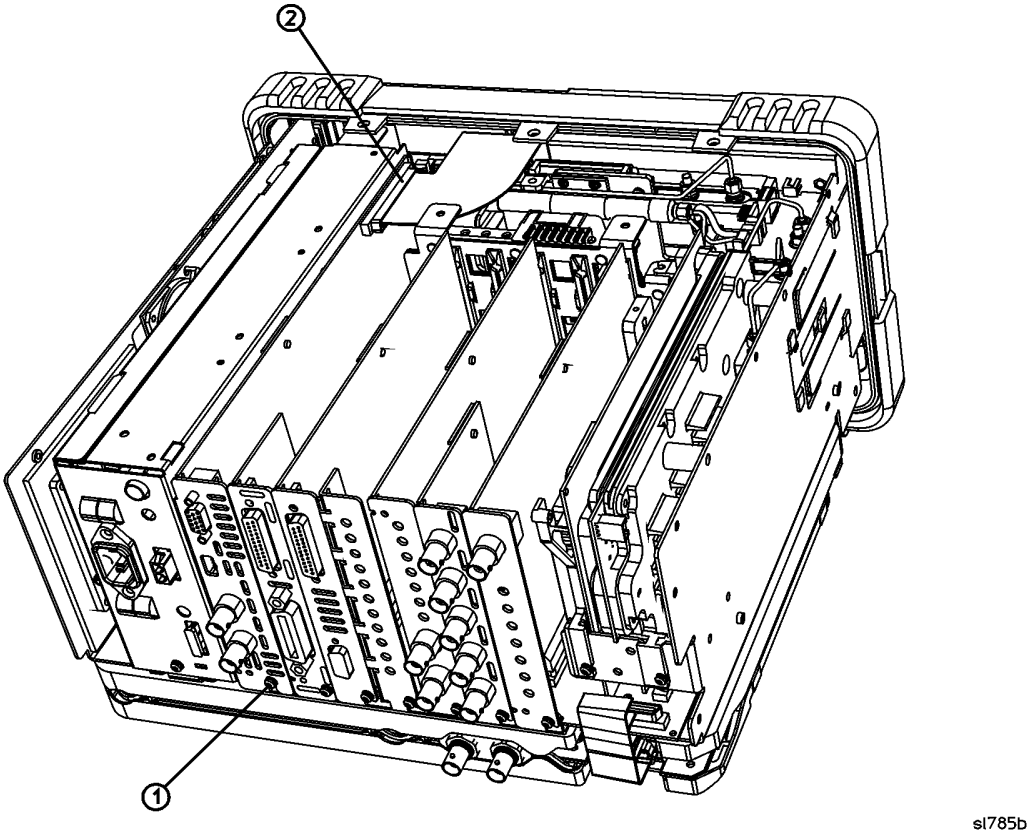

## Replacement

1. Carefully plug the processor assembly into the motherboard.
2. Refer to Figure 6-23. Replace the single screw **(1)** that secures the processor assembly to the chassis, but do not tighten it yet.
3. Reconnect the front panel ribbon cable **(2)** to the processor assembly.
4. Replace the vibration support bar. Refer to the replacement procedure "Vibration Support Bar" on page 271.
5. Replace the chassis cover. Refer to the replacement procedure "Chassis Cover" on page 252.
6. Replace the outer case. Refer to the replacement procedure "Instrument Outer Case" on page 250.
7. Refer to Table 7-2 on page 330 for the related adjustments and performance verification tests required for each assembly.

# A4A1 and A4A2 Flash and DRAM SIMM

**CAUTION** Use ESD precautions when performing this replacement procedure.

## Removal and Replacement

1. Remove the A4 processor assembly. Refer to the removal procedure "A4 Processor Assembly" on page 283.
2. Refer to Figure 6-24. Carefully remove the flash SIMM **(1)** or the DRAM SIMM **(2)**.
3. Replace the flash SIMM **(1)** or the DRAM SIMM **(2)**.
4. Replace the A4 processor assembly. Refer to the replacement procedure "A4 Processor Assembly" on page 283.
5. Refer to Table 7-2 on page 330 for the related adjustments and performance verification tests required for each assembly.

**Figure 6-24 Flash SIMM and DRAM SIMM**

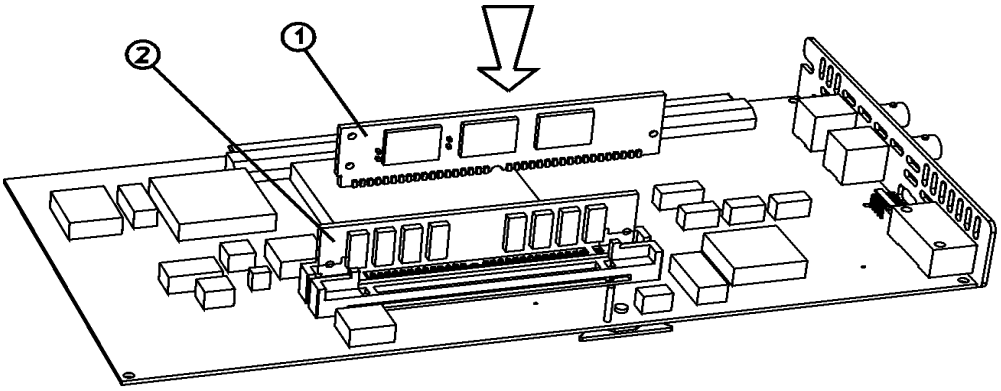


sl786b

# A4MAU58 Battery

**CAUTION** Use ESD precautions when performing this replacement procedure.

**WARNING** **There is a danger of explosion if the battery is incorrectly replaced. Replace only with the same or equivalent type recommended. Discard used batteries according to manufacturer's instruction.**

**DO NOT THROW BATTERIES AWAY BUT COLLECT AS SMALL CHEMICAL WASTE.**

sk780a

## Removal and Replacement

1. Remove the A4 processor assembly from the analyzer. Refer to the removal procedure "A4 Processor Assembly" on page 283.
2. Refer to Figure 6-25. Gently pry the A4MAU58 lithium battery from the processor board.
3. Insert the new battery, ensuring proper polarity as indicated on the socket.
4. Replace the processor assembly in the analyzer. Refer to the replacement procedure "A4 Processor Assembly" on page 283.
5. Refer to Table 7-2 on page 330 for the related adjustments and performance verification tests required for each assembly.

**Figure 6-25** **Processor Battery Location**

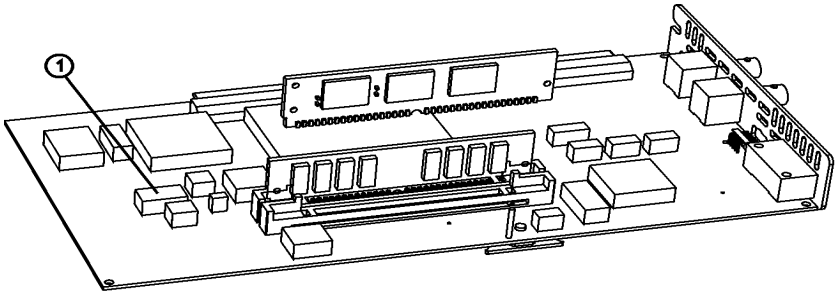


sl759b

# A5 Power Supply

**CAUTION** Use ESD precautions when performing this replacement procedure.

## Removal

1. Remove the analyzer chassis cover. Refer to the removal procedure "Chassis Cover" on page 252.
2. Remove the vibration support bar. Refer to the removal procedure "Vibration Support Bar" on page 271.
3. Extend the A1 front frame assembly. Refer to the extension procedure "A1 Front Frame Assembly" on page 254.
4. Refer to Figure 6-26. Remove the single screw **(4)** securing the A5 power supply assembly **(5)** to the chassis at the rear of the analyzer.
5. Carefully pull up on the power supply assembly to remove it from motherboard connector.

**Figure 6-26** **A5 Power Supply**

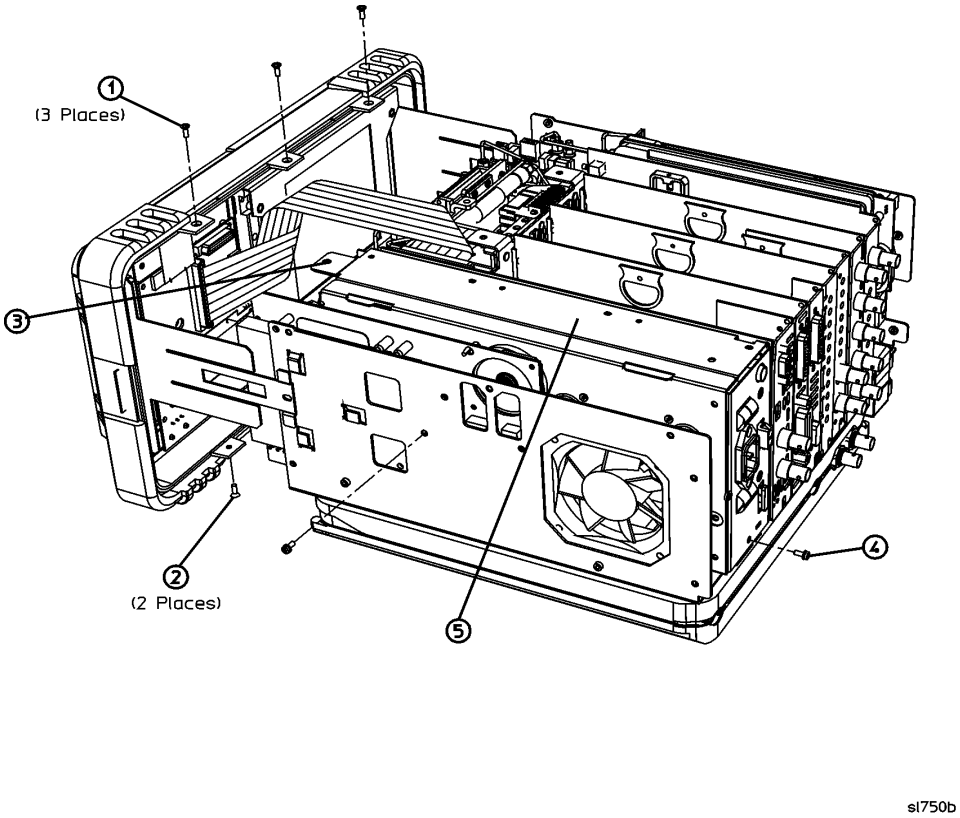

## Replacement

1. Carefully plug the A5 power supply assembly into the motherboard.
2. Refer to Figure 6-26. Replace the single screw **(4)** that secures the power supply **(5)** to the chassis, but do not tighten it yet.
3. Reconnect the front frame assembly to the chassis. Refer to the replacement procedure "A1 Front Frame Assembly" on page 254.
4. Replace the vibration support bar. Refer to the replacement procedure "Vibration Support Bar" on page 271.
5. Replace the chassis cover. Refer to the replacement procedure "Chassis Cover" on page 252.
6. Replace the outer case. Refer to the replacement procedure "Instrument Outer Case" on page 250.
7. Refer to Table 7-2 on page 330 for the related adjustments and performance verification tests required for each assembly.

# A5B1 Fan

**CAUTION** Use ESD precautions when performing this replacement procedure.

## Removal

1. Remove the power supply assembly. Refer to the removal procedure "A5 Power Supply" on page 287.
2. Unplug the fan wires (2) from the power supply board connector (3) inside the assembly. Refer to Figure 6-27
3. Refer to Figure 6-27. Remove the four screws **(1)** securing the top cover to the power supply assembly.

**Figure 6-27 Power Supply Cover Removal**

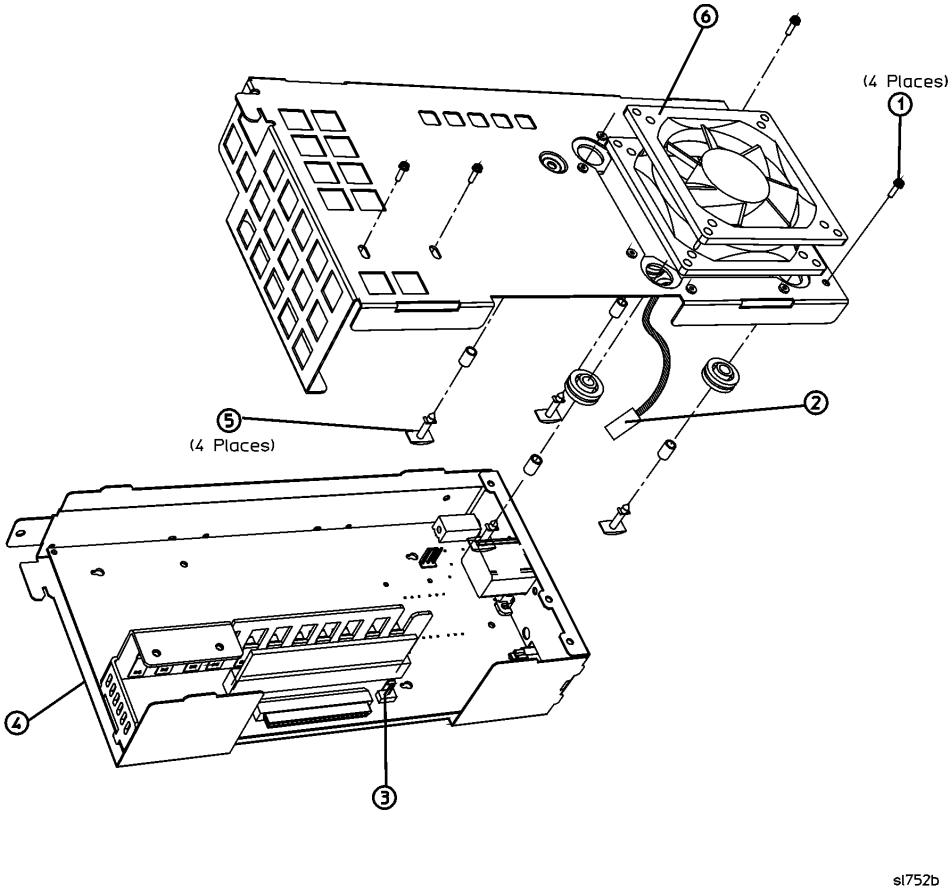

4. Remove the top cover.
5. Locate the four plastic rivets **(5)** that secure the fan **(6)** to the cover.
6. The rivets are not reusable and need to be cut off in order to change the fan.
7. The fan can be removed after the four rivets are cut out.

## Replacement

1. Position the fan on the outside of the power supply cover so that the fan wires go through the opening of the cover and are aligned with the notch. Be careful to install the fan so that the arrow indicating the direction of the air flow, (on the body of the fan), is pointing away from the cover. This will ensure the proper air flow through the analyzer and exiting through the side panel. Be careful not to pinch the fan wires against the cover.
2. Refer to Figure 6-27. Assemble the bushing, grommet, and rivet as shown in four places.
3. Replace the power supply cover, with fan, on the power supply assembly. Make sure the lip on the top cover catches underneath **(4)** the bottom cover.
4. Replace the four screws **(1)** that secure the top cover to the power supply assembly. Tighten them to 9 inch-pounds.
5. Plug the fan connector into the power supply board.
6. Replace the power supply assembly. Refer to the replacement procedure "A5 Power Supply" on page 287.
7. Refer to Table 7-2 on page 330 for the related adjustments and performance verification tests required for each assembly.

# A6 Floppy Drive and Speaker Assembly

**CAUTION** Use ESD precautions when performing this replacement procedure.

## Removal

1. Remove the analyzer chassis cover. Refer to the removal procedure "Chassis Cover" on page 252.
2. Extend the A1 front frame. Refer to the extension procedure "A1 Front Frame Assembly" on page 254.
3. Refer to Figure 6-28. Remove the four screws **(1)** securing the A6 floppy/speaker assembly **(2)** to the side frame.
4. Carefully pull up on the floppy/speaker assembly to remove it from the motherboard connector.

**Figure 6-28** **A6 Speaker Assembly Removal**

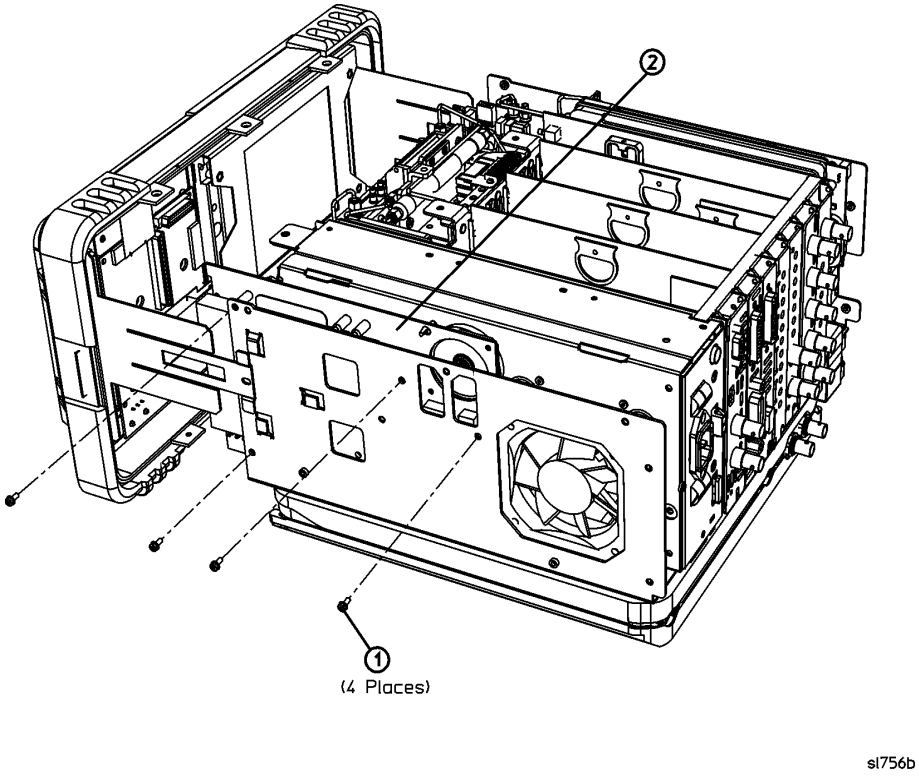

## Replacement

1. Carefully plug the A6 floppy/speaker assembly into the motherboard.
2. Refer to Figure 6-28. Replace the four screws **(1)** that secure the floppy/speaker assembly **(2)** to the side chassis. Tighten them to 9 inch-pounds.
3. Reconnect the A1 Front Frame to the chassis. Refer to the replacement procedure "A1 Front Frame Assembly" on page 254.
4. Replace the chassis cover. Refer to the replacement procedure "Chassis Cover" on page 252.
5. Replace the outer case. Refer to the replacement procedure "Instrument Outer Case" on page 250.
6. Refer to Table 7-2 on page 330 for the related adjustments and performance verification tests required for each assembly.

# A7 Motherboard Assembly

**CAUTION** Use ESD precautions when performing this replacement procedure.

## Removal

1. Remove the instrument outer case. Refer to the removal procedure "Instrument Outer Case" on page 250.
2. Remove the analyzer chassis cover. Refer to the removal procedure "Chassis Cover" on page 252.
3. Extend the A1 front frame. Refer to the extension procedure "A1 Front Frame Assembly" on page 254.
4. Remove the vibration support bar. Refer to the removal procedure "Vibration Support Bar" on page 271.
5. Remove the A6 floppy/speaker assembly. Refer to the removal procedure"A6 Floppy Drive and Speaker Assembly" on page 291.
6. If the analyzer is an Option 1DN or Option 1DQ, remove the A2 tracking generator. Refer to the removal procedure "A2 1.5 GHz Tracking Generator Assembly" on page 274 or "A2 3.0 GHz Tracking Generator Assembly" on page 279.
7. Remove the A3 IF assembly. Refer to the removal procedure "A3 IF Assembly" on page 281.
8. Remove the A4 processor assembly. Refer to the removal procedure "A4 Processor Assembly" on page 283.
9. Remove the A5 power supply assembly. Refer to the removal procedure "A5 Power Supply" on page 287.
10. Remove all installed input/output or optional assemblies from the motherboard. Refer to the removal procedure "FM Demod, SIO, GPIB, RS-232, Noise Source Driver" on page 296.

**Figure 6-29 A7 Motherboard Removal**

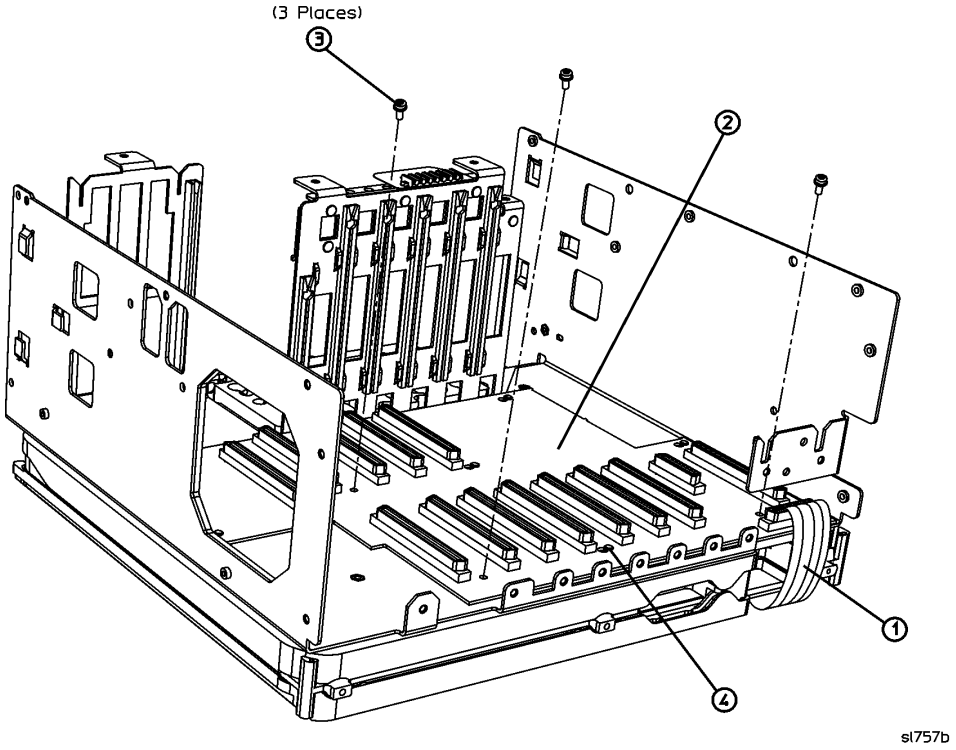


11. Refer to Figure 6-29. Disconnect the RF ribbon cable **(1)** from the motherboard **(2)**.
12. Remove the three screws **(3)** as indicated in Figure 6-29.
13. Slide the motherboard sideways to disengage the shoulder lock standoffs **(4)**, and lift the motherboard out of the chassis.

## Replacement

1. Refer to Figure 6-29. Carefully place the motherboard **(2)** into the chassis.
2. Slide the motherboard sideways to engage the shoulder locks **(4)** on the chassis.
3. Replace the three screws **(3)** that secure the motherboard to the chassis. Tighten them to 9 inch-pounds.
4. Refer to Figure 6-29. Connect the RF ribbon cable **(1)** to the motherboard.
5. Replace the A5 power supply assembly. Refer to the replacement procedure "A5 Power Supply" on page 287.
6. Replace the A4 processor assembly. Refer to the replacement procedure "A4 Processor Assembly" on page 283.
7. Replace the A3 IF assembly. Refer to the replacement procedure "A3 IF

Assembly" on page 281.

8. Replace the A2 tracking generator assembly (Option 1DN) if applicable. Refer to the replacement procedure "A2 1.5 GHz Tracking Generator Assembly" on page 274 or "A2 3.0 GHz Tracking Generator Assembly" on page 279.
9. Replace the A6 speaker assembly. Refer to the replacement procedure "A6 Floppy Drive and Speaker Assembly" on page 291.
10. Replace the I/O assemblies. Refer to the replacement procedure "FM Demod, SIO, GPIB, RS-232, Noise Source Driver" on page 296.
11. Reconnect the A1 front frame to the chassis. Refer to the replacement procedure "A1 Front Frame Assembly" on page 254.
12. Replace the vibration support bar. Refer to the replacement procedure "Vibration Support Bar" on page 271.
13. Replace the chassis cover. Refer to the replacement procedure "Chassis Cover" on page 252.
14. Replace the outer case. Refer to the replacement procedure "Instrument Outer Case" on page 250.
15. Refer to Table 7-2 on page 330 for the related adjustments and performance verification tests required for each assembly.

# Card Cage Assemblies

## FM Demod, SIO, GPIB, RS-232, Noise Source Driver

**CAUTION** Use ESD precautions when performing this replacement procedure.

**The following procedure can be used for all of the Card Cage assemblies:**

- A7A1 Spectrum Analyzer Input/Output Assembly (Option A4J)
- A7A2 GPIB/Parallel Assembly (Option A4H)
- A7A3 RS-232/Parallel Assembly (Option 1AX)
- A7A4 Frequency Extension Assembly (E4404B, E4405B, E4407B, E4408B)
- A7A5 Fast ADC Assembly (Option AYX – available on all Agilent ESA-E Series spectrum analyzers: E4401B, E4402B, E4404B, E4405B, and E4407B)
- A7A6 FM Demod Assembly (Option BAA - available on all Agilent ESA-E series spectrum analyzers: E4401B, E4402B, E4404B, E4405B, and E4407B)
- A7A10 Bluetooth Demodulator Assembly (Option 106 - available on E4402B, E4404B, E4405B, and E4407B)
- A7A13 Noise Source Driver Assembly (part of Option 219 - available on all ESA-E Series spectrum analyzers; E4401B, E4402B, E4404B, E4405B, and E4407B)

**Removal**

1. Remove the analyzer chassis cover. Refer to the removal procedure "Chassis Cover" on page 252.
2. Remove the vibration support bar. Refer to the removal procedure "Vibration Support Bar" on page 271.
3. Locate the assembly to be removed.

**Figure 6-30 Card Cage Hardware**

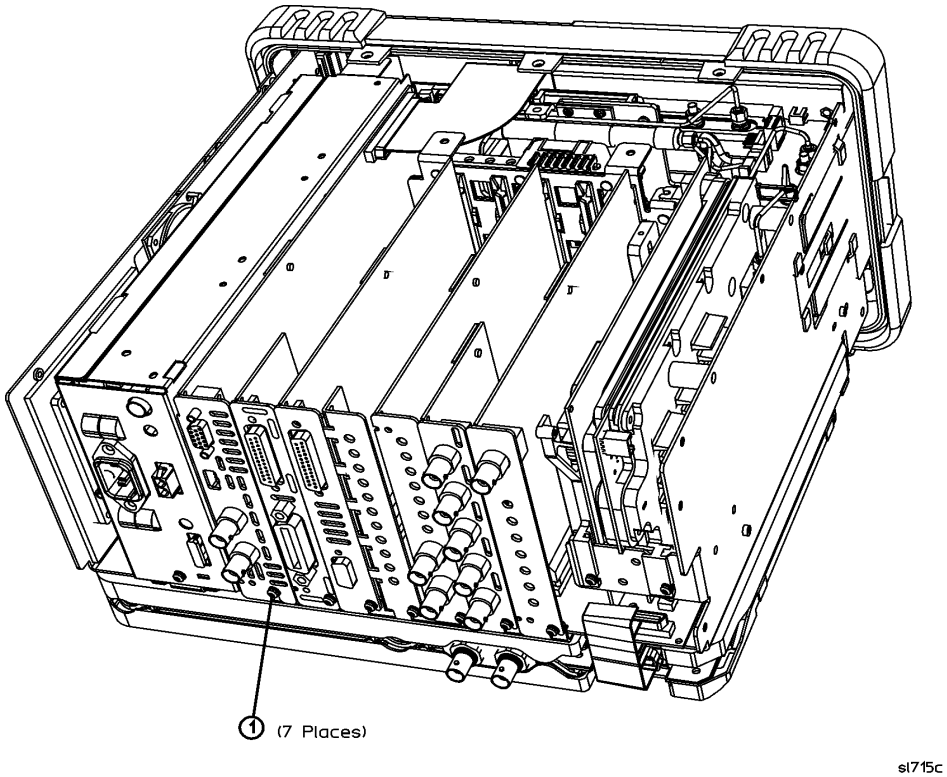


4. Refer to Figure 6-30. Loosen, the single screw **(1)** securing the card cage assembly to the chassis.
5. Carefully pull up on the assembly to remove it from the motherboard connector.

### Replacement

1. Carefully plug the assembly into the motherboard.
2. Refer to Figure 6-30. Replace the single screw **(1)** that secures the card cage assembly to the chassis, but do not tighten it yet.
3. Replace the vibration support bar. Refer to the replacement procedure "Vibration Support Bar" on page 271.
4. Refer to Figure 6-30. Tighten the single screw **(1)** that secures the card cage assembly to the chassis to 9 inch-pounds.
5. Replace the chassis cover. Refer to the replacement procedure "Chassis Cover" on page 252.
6. Replace the outer case. Refer to the replacement procedure "Instrument Outer Case" on page 250.
7. Refer to Table 7-2 on page 330 for the related adjustments and performance verification tests required for each assembly.

## Digital Demod Assemblies Replacement

### Digital Signal Processor Board Removal

**CAUTION** Use ESD precautions when performing this replacement procedure.

1. Remove the analyzer chassis cover. Refer to the removal procedure "Chassis Cover" on page 252.
2. Remove the vibration support bar. Refer to the removal procedure "Vibration Support Bar" on page 271.
3. Refer to Figure 6-31. Loosen, the single screw **(1)** securing the digital signal processor (DSP) assembly to the chassis.
4. Carefully pull up on the DSP assembly to remove it from the motherboard connector.
5. Unplug the sample rate cable **(2)** and the DSP out cable **(3)** from the DSP assembly.
6. Remove the DSP assembly.

**Figure 6-31 Digital Signal Processor Board**

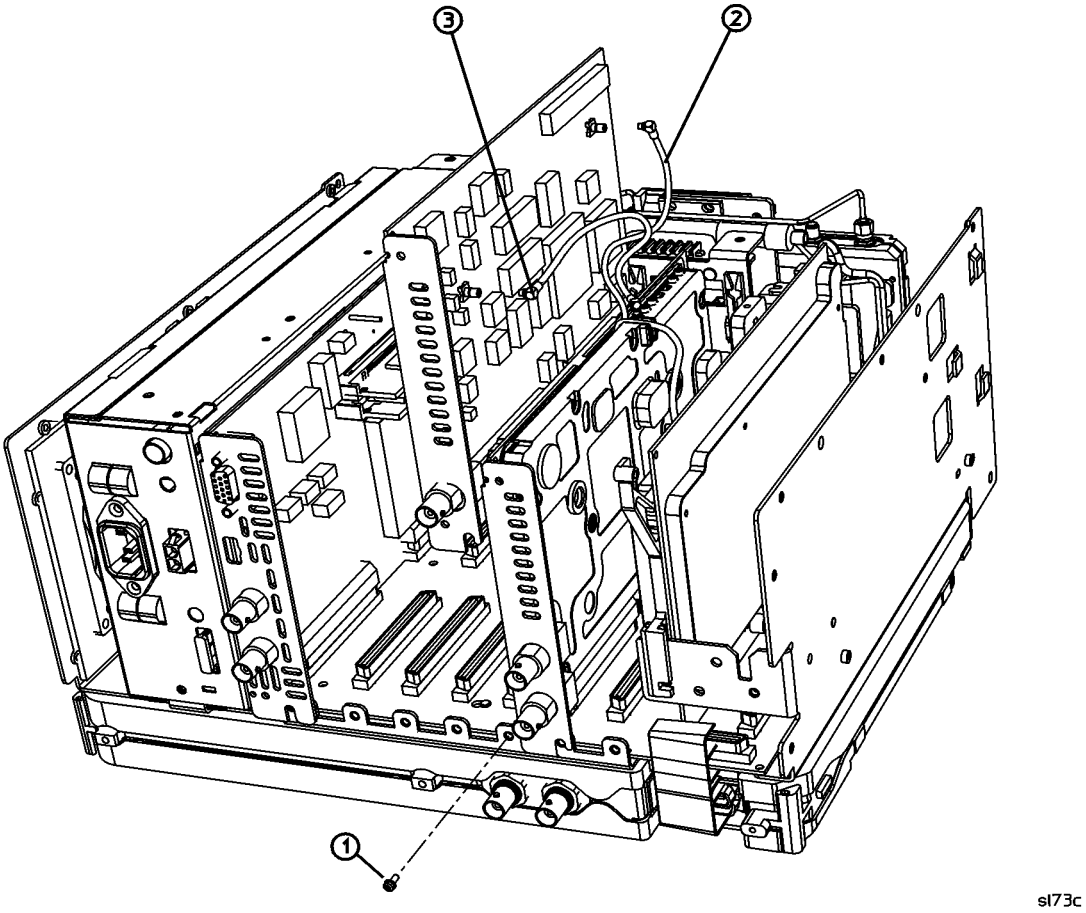

### Digital Signal Processor Board Replacement

**CAUTION** Use ESD precautions when performing this replacement procedure.

1. Refer to Figure 6-31. Position the digital signal processor (DSP) assembly to be able to connect the cables as shown.
2. Connect the sample rate cable **(2)** and the DSP out cable **(3)** to the DSP assembly.
3. Lower the assembly into the card cage being careful not to pinch the cables, and plug it into the motherboard.
4. Replace the single screw **(1)** securing the DSP assembly to the chassis.
5. Replace the vibration support bar. Refer to the replacement procedure "Vibration Support Bar" on page 271.
6. Replace the analyzer chassis cover. Refer to the replacement procedure "Chassis Cover" on page 252.

### Digital Demod RF Board Removal

**CAUTION** Use ESD precautions when performing this replacement procedure.

1. Remove the DSP board. Refer to the procedure "Digital Signal Processor Board Removal" on page 298.
2. Refer to Figure 6-30. Loosen, the single screw **(1)** securing the Digital Demod RF (DDRF) assembly to the chassis.
3. Refer to Figure 6-32. Unplug the MMCX cable connectors **(2)** through **(6)** from the DDRF board.

**Figure 6-32 Digital Demod RF Board Cables**

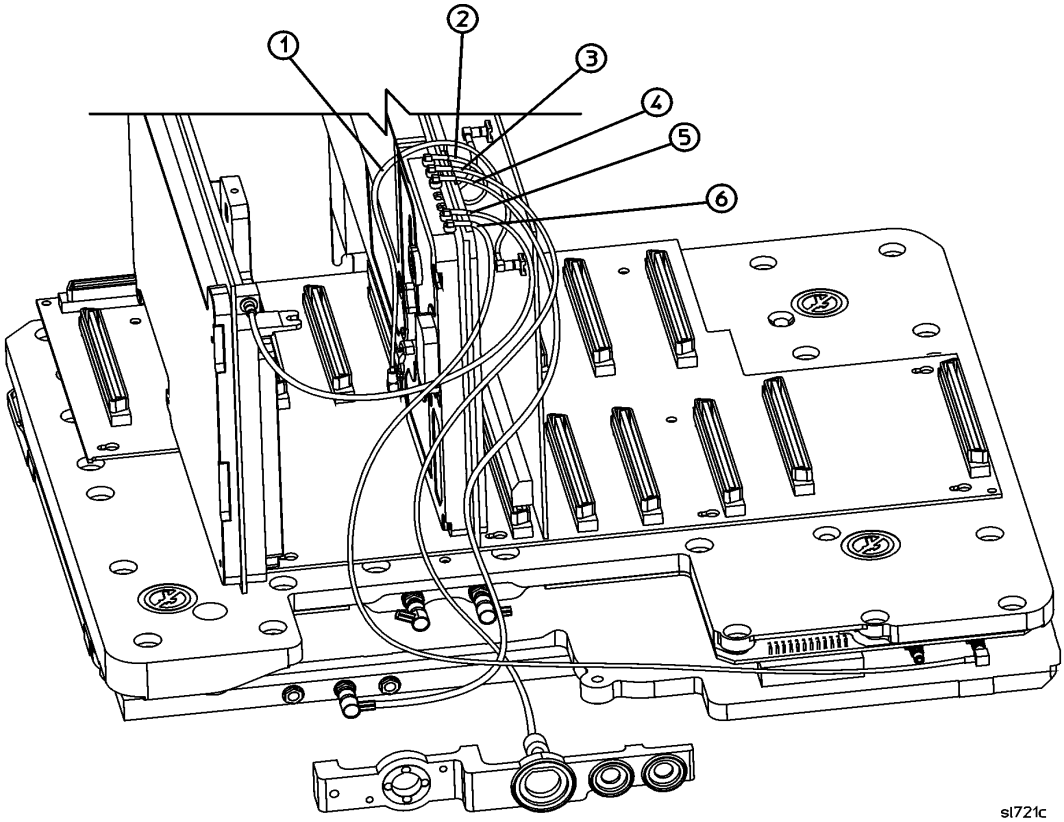

**Figure 6-33 Digital Demod RF Board Cable Clip**

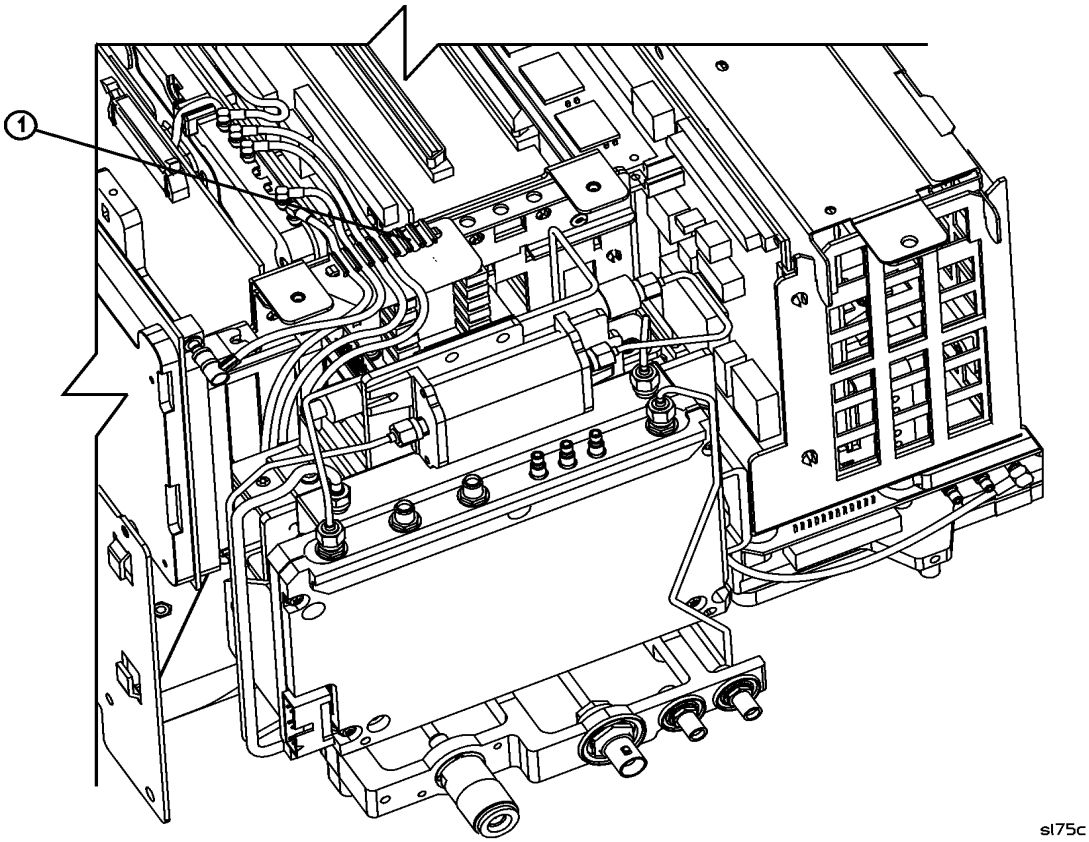


4. Refer to Figure 6-33. Remove the cables from the cable clip **(1)**.
5. Carefully pull up on the DDRF assembly, to unplug it from the motherboard, remove the DDRF assembly.
6. Refer to Figure 6-34. If necessary, unplug the sample rate cable **(1)** from the DDRF board and remove the cable from the groves on the shield and the cable clip **(2)**.

### Digital Demod RF Board Replacement

**CAUTION** Use ESD precautions when performing this replacement procedure.

**Figure 6-34 Digital Demod RF Board Sample Rate Cable Routing**

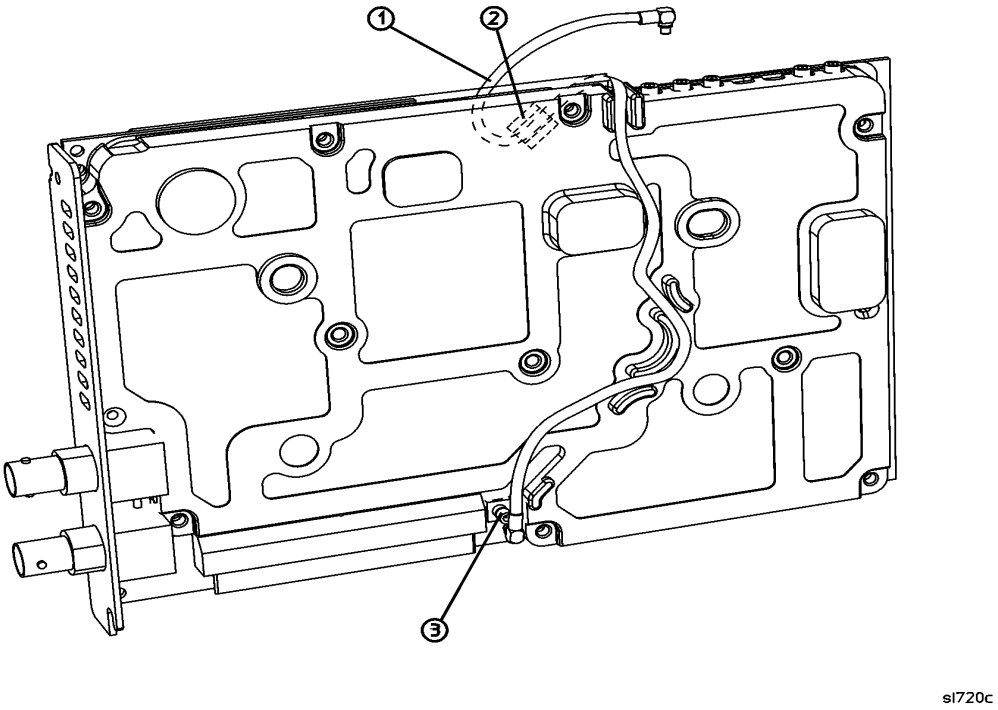


1. Refer to Figure 6-33. Ensure that the DDRF cables have been removed from the cable clip (**1**).
2. Refer to Figure 6-34. Connect sample rate cable **(3)** to the DDRF board at J12.
3. Dress the cable into the groves on the shield, over the top of the board, and secure it in the cable clip **(2)** as shown.

**Figure 6-35 Digital Demod RF Board Option Slot**

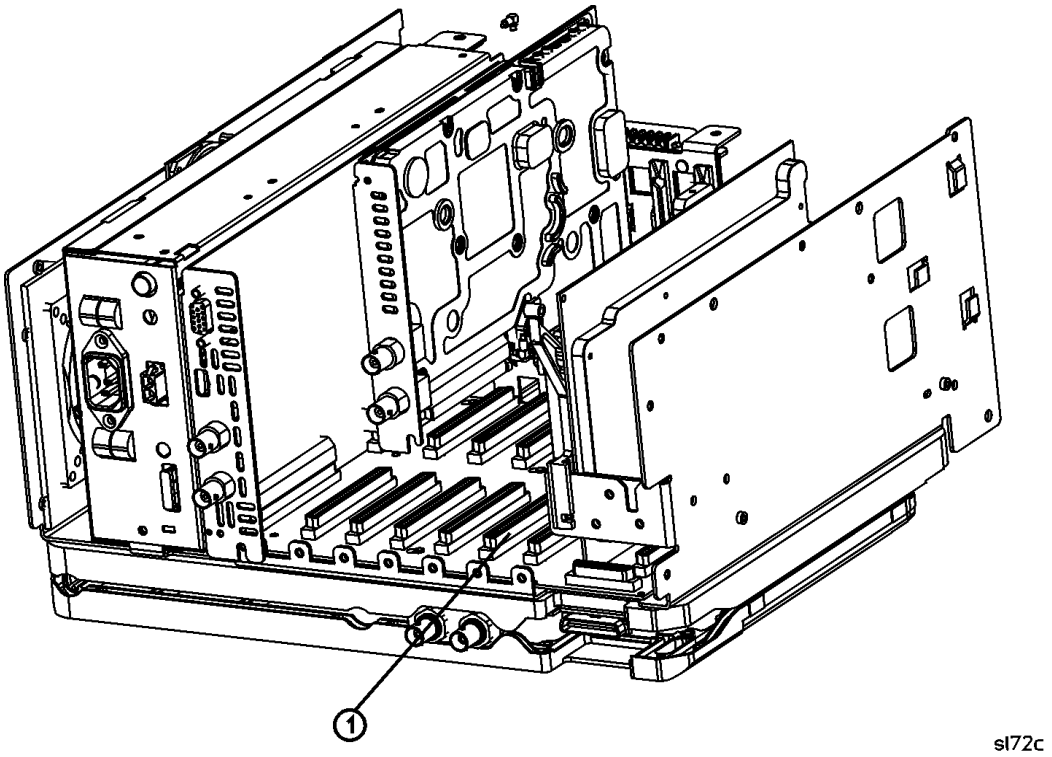


4. Refer to Figure 6-35. Lower the assembly into the card cage being careful not to pinch the cables and plug it into Option Slot 5 **(1)** on the motherboard.
5. Refer to Figure 6-32. Connect the MMCX cable connectors to the DDRF board as shown in the illustration.
6. Refer to Figure 6-33. Secure the MMCX cables in the cable clip **(1)**.
7. Refer to Figure 6-30. Replace the single screw **(1)** securing the DDRF assembly to the chassis.
8. Connect the sample rate cable to the DSP board and replace the DSP board into Option Slot 4. Refer to the procedure "Digital Signal Processor Board Replacement" on page 299.

# A8 1.5 GHz RF Assembly

(E4401B and E4411B)

**CAUTION** Use ESD precautions when performing this replacement procedure.

**NOTE** The RF assembly is not field serviceable. Please do not remove the shields (other than the input connector cover).

## Removal

1. Remove the instrument outer case. Refer to the removal procedure "Instrument Outer Case" on page 250.
2. Remove chassis cover. Refer to the removal procedure "Chassis Cover" on page 252.
3. Remove the A1 Front Frame assembly. Refer to the removal procedure "A1 Front Frame Assembly" on page 254.

**Figure 6-36 A8 1.5 GHz RF Assembly Cables**

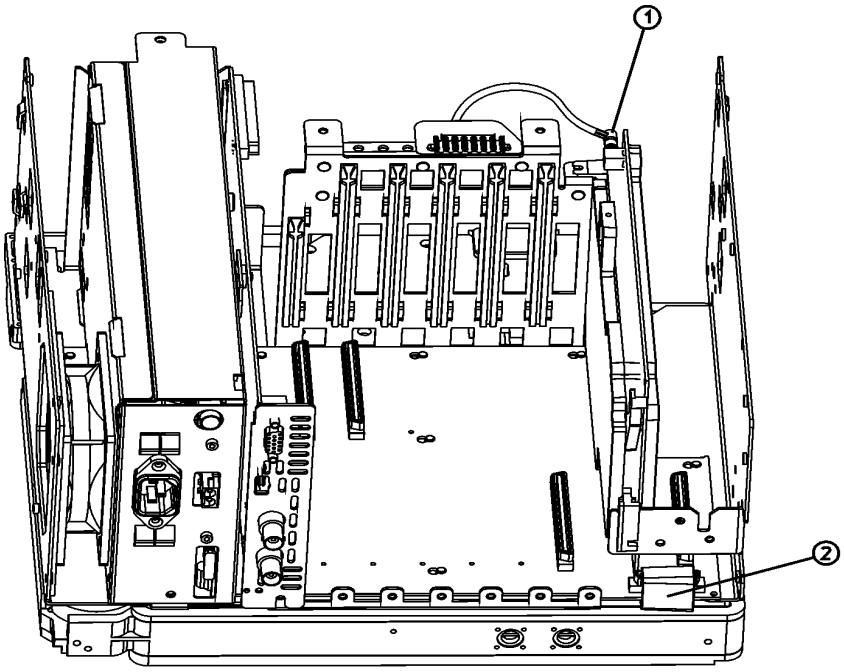


sl771b

4. Refer to Figure 6-36. Disconnect the W2 coaxial cable `(1)` from the A3 IF assembly.
5. Disconnect the RF ribbon cable **`(2)`** from the motherboard at the rear of the analyzer.

**Figure 6-37 A8 1.5 GHz RF Assembly Removal**

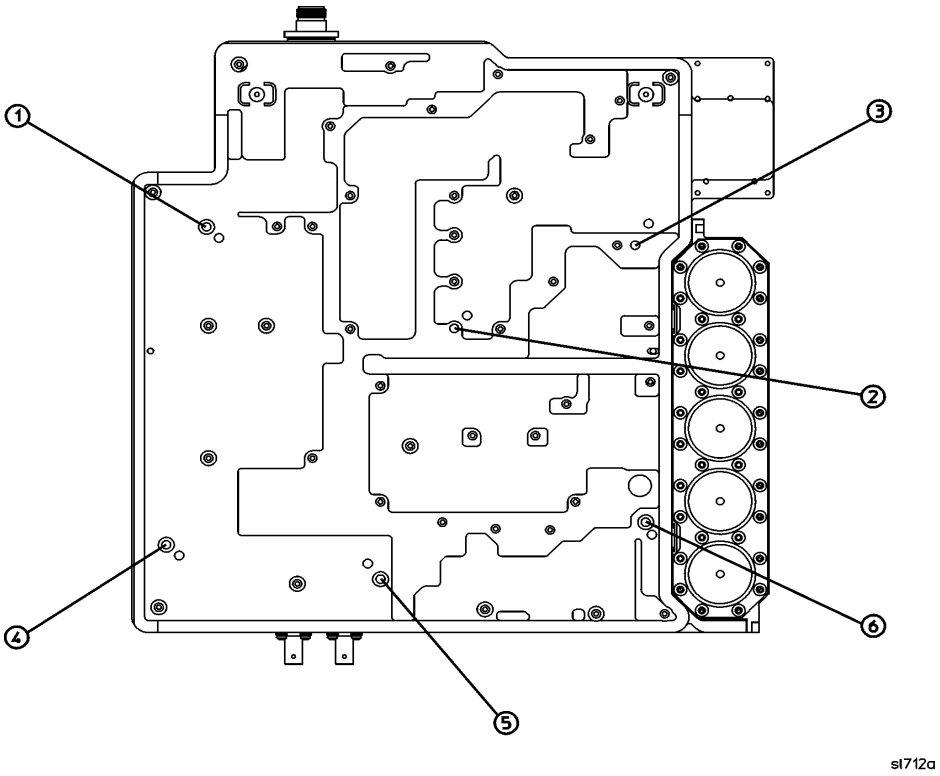


6. Refer to Figure 6-37. Turn the analyzer upside down and remove the six screws labeled **`(1 - 6)`** that hold the RF assembly to the chassis.
7. Lift the RF assembly from the spectrum analyzer.

## Replacement

1. Place the analyzer chassis upside down on the work surface.
2. Position the RF assembly on the chassis, taking care not to pinch any of the cables.
3. Refer to Figure 6-37. Replace the six screws labeled **`(1 - 6)`** that secure the RF assembly to the chassis. The correct screw holes are marked 1 through 6 on the assembly. Tighten them to 9 inch-pounds.
4. Refer to Figure 6-36. Connect the ribbon cable **`(1)`** to the RF assembly and W2 coaxial cable **`(2)`** to the A3 IF assembly.
5. Replace the chassis cover. Refer to the replacement procedure "Chassis Cover" on page 252.

6. Make sure the water seal is in place on the input connector.
7. Reconnect the A1 front frame to the chassis. Refer to the replacement procedure "A1 Front Frame Assembly" on page 254.
8. Replace the outer case. Refer to the replacement procedure "Instrument Outer Case" on page 250.
9. Refer to Table 7-2 on page 330 for the related adjustments and performance verification tests required for each assembly.

# A8 3.0 GHz RF Assembly

(E4402B, E4404B, E4405B, E4407B, and E4408B)

**CAUTION** Use ESD precautions when performing this replacement procedure.

## Removal

1. Remove the analyzer chassis cover. Refer to the removal procedure "Chassis Cover" on page 252.
2. Remove the A1 front frame assembly. Refer to the removal procedure "A1 Front Frame Assembly" on page 254.

**Figure 6-38 3.0 GHz RF Assembly Ribbon Cable**

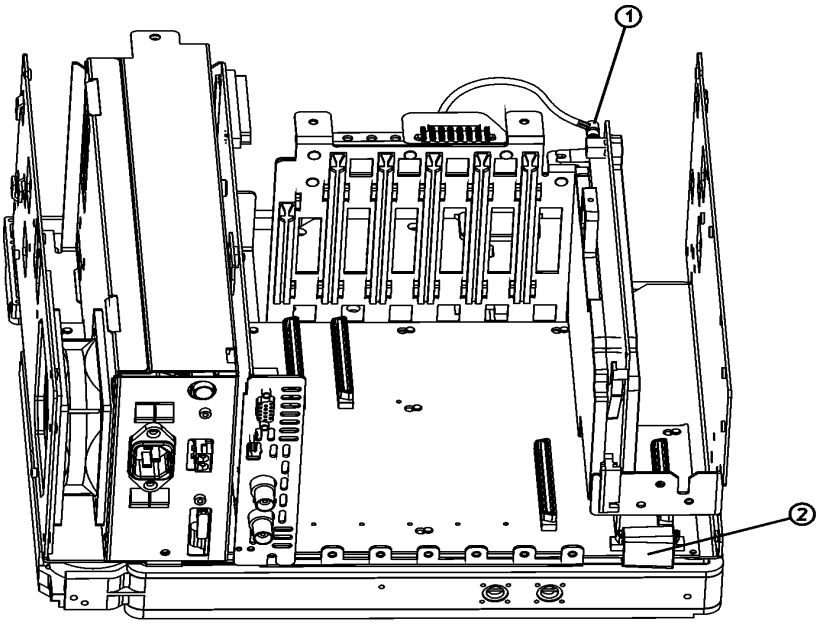


sl771b

3. Referring to Figure 6-38, disconnect the SMB cable **(1)** from the IF assembly.
4. Disconnect the RF assembly ribbon cable **(2)**.

**Figure 6-39 3.0 GHz RF Assembly Cables**

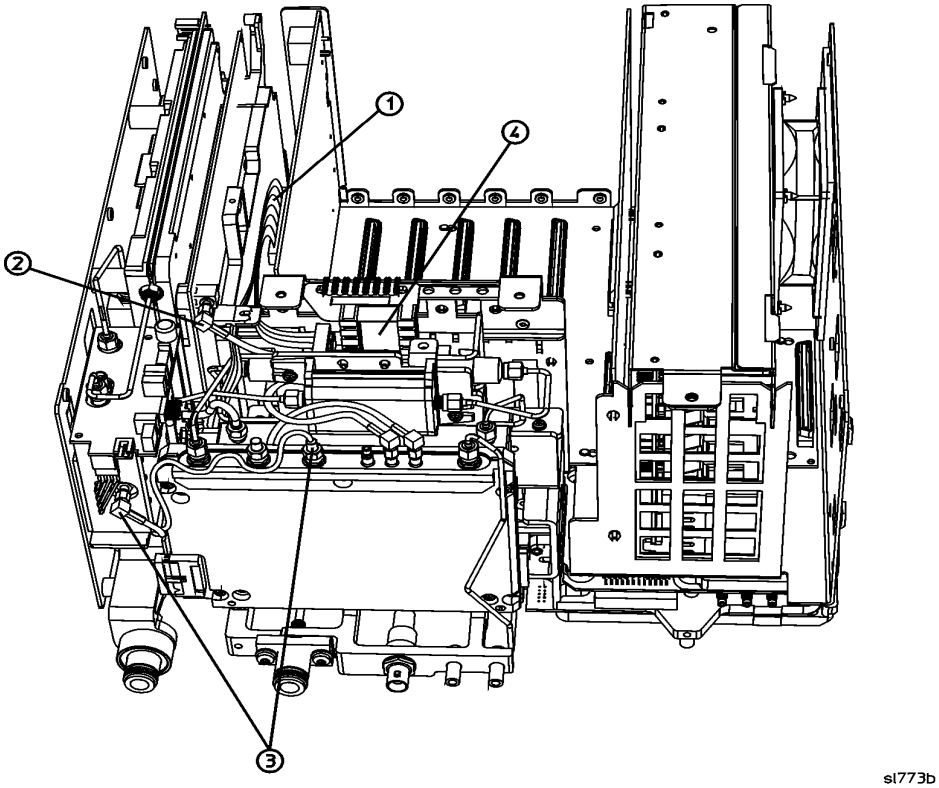


5. Referring to Figure 6-39, disconnect the frequency extension ribbon cable **(1)**. (E4404B, E4405B, E4407B, and E4408B only)
6. Gently tuck these two cables away behind the microcircuits **(4)** of the RF assembly.
7. If the analyzer has a tracking generator, disconnect the cable **(3)** from the tracking generator connector. Tuck the cable end with the yellow tag away with the other cables as described in the previous step.

**Figure 6-40 RF Deck Screws**

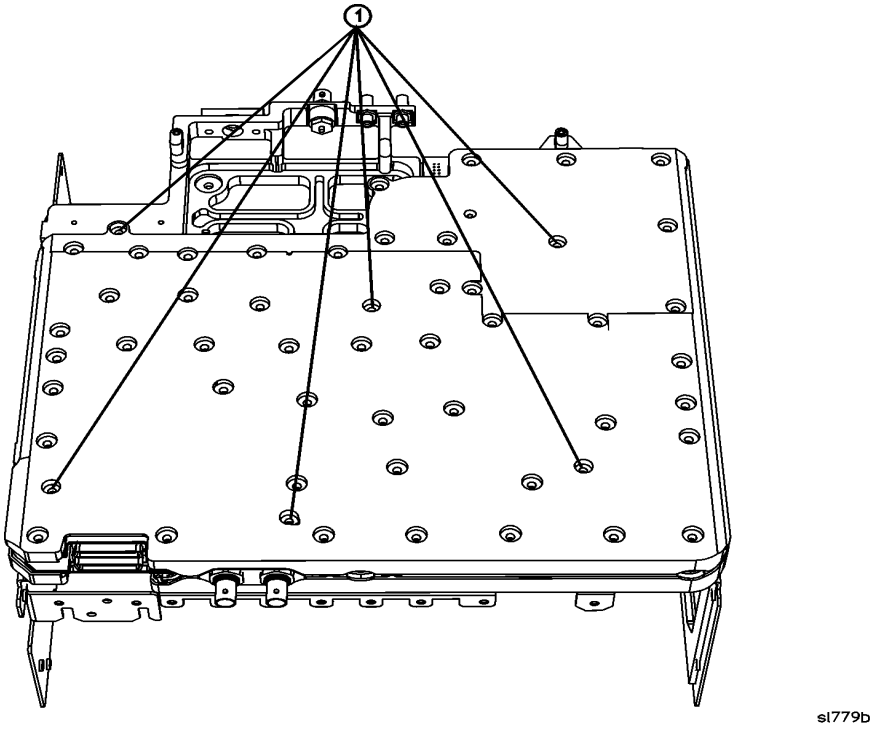


8. Referring to Figure 6-40, position the analyzer upside down and remove the six screws **(1)** marked “RF Deck” securing the RF assembly to the chassis.
9. Carefully lift the RF assembly from the chassis.

**CAUTION** The cables and assemblies are easily damaged. Once removed, it is best to lay the RF assembly flat on a work surface. Do not rest it against any of the microcircuits or cables.

## Replacement

1. Position the analyzer upside down on the work surface.
2. Referring to Figure 6-39, tuck the cables away behind the microcircuits **(4)**.
3. Lower the RF assembly onto the chassis taking care not to pinch any cables.
4. Referring to Figure 6-40, replace the six screws **(1)** securing the RF assembly to the chassis, and tighten them to 9 inch-pounds.
5. Referring to Figure 6-39, connect the ribbon cable **(1)** to the frequency extension assembly. (E4404B, E4405B, E4407B, and E4408B only)
6. Connect the SMB cable **(2)** to the IF assembly.
7. If the analyzer has a tracking generator, reconnect the cables **(3)** to it, and tighten the SMA connector to 10 inch-pounds.

8. Connect the RF assembly ribbon cable **(2)** as shown in Figure 6-38.
9. Replace the A1 front frame assembly. Refer to the replacement procedure "A1 Front Frame Assembly" on page 254.
10. Replace the analyzer chassis cover. Refer to the replacement procedure "Chassis Cover" on page 252.

# RF Subassemblies

**CAUTION** Use ESD precautions when performing this replacement procedure.

## A8A1 OCXO Precision Frequency Reference

(Option 1D5 - E4401B only)

**CAUTION** Use ESD precautions when performing this replacement procedure.

### Removal

1. Remove the A8 1.5 GHz RF Assembly. Refer to the removal procedure "A8 1.5 GHz RF Assembly" on page 304.

**Figure 6-41 Precision Frequency Reference**

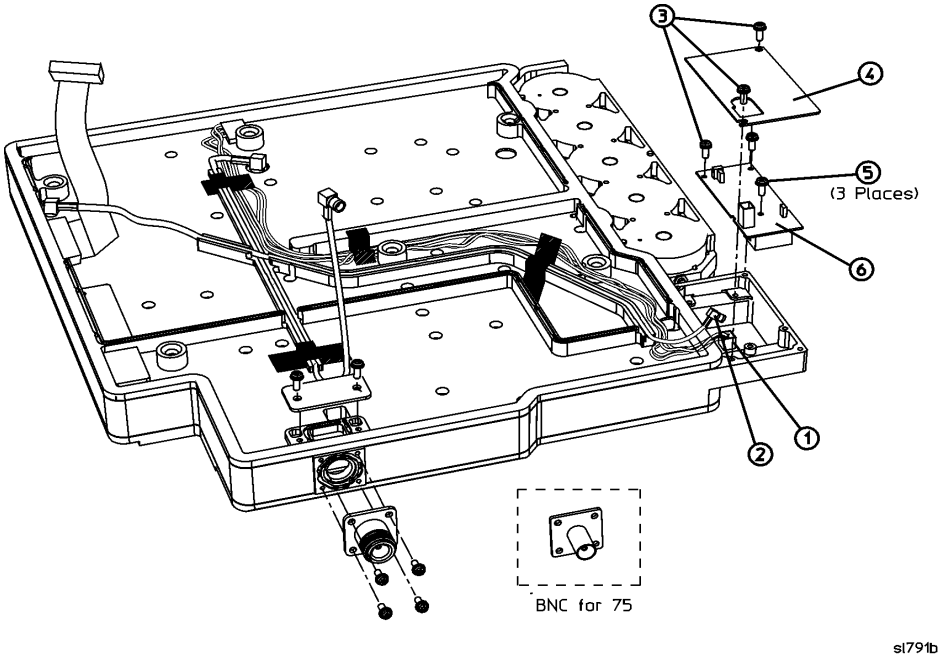


2. Referring to Figure 6-41, disconnect the control cable **(1)** and the SMB cable **(2)** from the precision frequency assembly.
3. Remove the screws **(3)** and cover **(4)**.
4. Remove the screws **(5)** and the assembly **(6)**.

### Replacement

1. Referring to Figure 6-41, replace the assembly **(6)** and secure with the screws **(5)**.

2. Replace the cover **(4)** and screws **(3)**.
3. Reconnect the control cable **(1)** and the SMB cable **(2)** to the precision frequency assembly.
4. Dress the cables to avoid pinching during reassembly.

## A8A4 LO Amp/IF Switch Assembly

(E4404B, E4405B, E4407B, and E4408B)

**CAUTION** Use ESD precautions when performing this replacement procedure.

**NOTE** The LO amplifier and IF switch (LOIS) assembly can be removed without removing the RF assembly.

### Removal

1. Remove the analyzer chassis cover. Refer to the removal procedure "Chassis Cover" on page 252.
2. Remove the A1 front frame assembly. Refer to the removal procedure "A1 Front Frame Assembly" on page 254.
3. Referring to Figure 6-42, disconnect any cables and loads **(1)** from the LOIS assembly.
4. Remove the three screws **(2)** and remove the LOIS assembly.

**Figure 6-42 Removing the LO Amplifier/IF Switch Assembly**

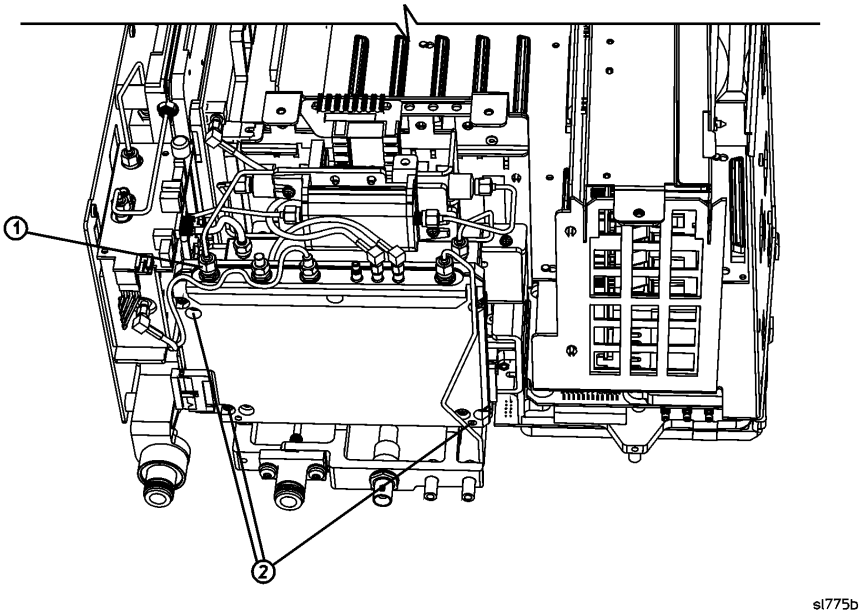

### Replacement

**CAUTION** Use care not to pinch any cables during reassembly.

1. Referring to Figure 6-42, replace the assembly and secure in place with the three screws **(2)**. Tighten them to 9 inch-pounds.
2. Reconnect the previously removed cables and loads **(1)**. Tighten the SMA connectors to 10 inch-pounds.
3. Replace the A1 front frame assembly. Refer to the replacement procedure "A1 Front Frame Assembly" on page 254.
4. Replace the analyzer chassis cover. Refer to the replacement procedure "Chassis Cover" on page 252.

## A8A5 Input Attenuator

(E4402 (Option UKB), E4404B, E4405B, E4407B, and E4408B)

**CAUTION** Use ESD precautions when performing this replacement procedure.

### Removal

1. Remove the A8 RF Assembly. Refer to the removal procedure "A8 3.0 GHz RF Assembly" on page 307.

**Figure 6-43 Input Attenuator Hardware**

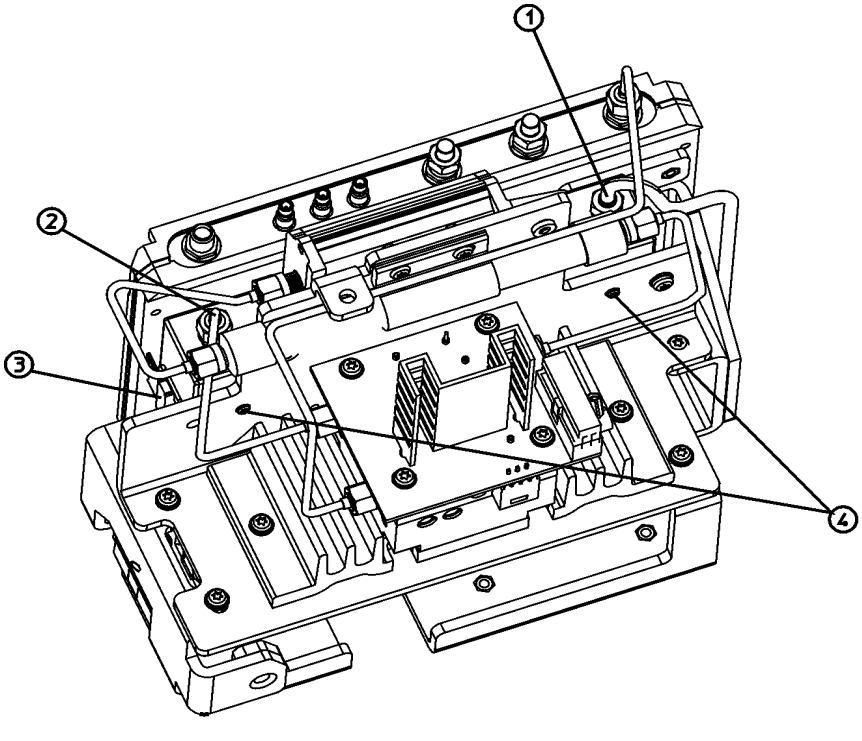

2. Refer to Figure 6-43. Disconnect the input semi-rigid cable **(1)** from the attenuator.
3. Remove the semi-rigid cable **(2)** from the attenuator.
4. Disconnect the ribbon cable **(3)** from the attenuator.
5. Remove the screws **(4)**.
6. Remove the attenuator from the left side as shown in Figure 6-44.

**Replacement**

**CAUTION** Use care not to pinch any cables during reassembly.

**Figure 6-44 Input Attenuator Remove and Replace**

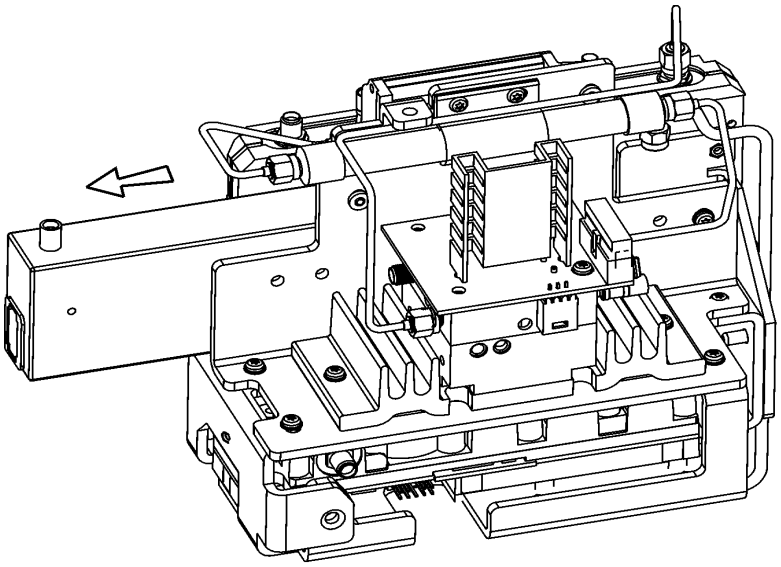

sl792b

1. Refer to Figure 6-44. Install the attenuator from the left side and secure in place with the two screws **(4)**. Tighten them to 9 inch-pounds.
2. Refer to Figure 6-43. Reconnect the ribbon cable **(3)** to the attenuator.
3. Reconnect the semi-rigid cables **(1)** and **(2)** to the attenuator. Tighten them to 10 inch-pounds.

## A8A6 YIG-Tuned Filter/Mixer

(E4404B, E4405B, E4407B, and E4408B)

**CAUTION** Use ESD precautions when performing this replacement procedure.

### Removal

1. Remove the A8 RF assembly. Refer to the removal procedure "A8 3.0 GHz RF Assembly" on page 307.
2. Position the A8 RF assembly right side up on the work bench.

**Figure 6-45 YIG-Tuned Mixer/Filter**

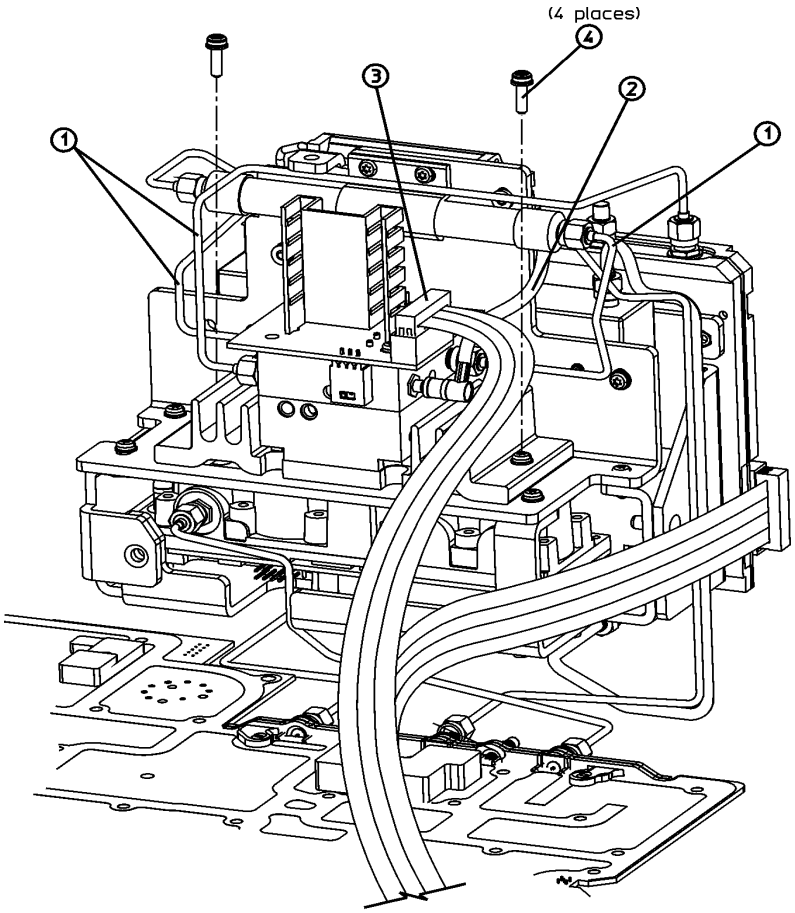


3. Refer to Figure 6-45. Remove the three semi-rigid cables **(1)** from the assembly.
4. Disconnect the SMB coax cable **(2)** from the YTF assembly.

5. Disconnect the frequency extension ribbon cable **(3)**.

   Use a T10 TORX driver to remove the two screws **(4)** from the assembly bracket.

6. Lift out the assembly.

**Replacement**

**CAUTION** Use great care not to overtighten the SMA connections to the YIG-tuned filter/mixer assembly. If the connectors are broken loose, the assembly will have to be returned to the factory for repair.

1. Refer to Figure 6-45. Replace the A8A6 YIG-tuned filter/mixer assembly onto the A8 RF assembly.
2. Replace the two screws, **(4)** and tighten them to 9 inch-pounds.
3. Replace the three semi-rigid cables **(1)** to the assembly and tighten them to 10 inch-pounds with a 5/16” wrench.
4. Reconnect the SMB coax cable **(2)**.
5. Reconnect the frequency extension ribbon cable **(3)**.
6. Replace the A8 RF Assembly. Refer to the replacement procedure “A8 3.0 GHz RF Assembly” on page 307.

## A8A2 Second Converter

(E4404B, E4405B, E4407B, and E4408B)

**CAUTION** Use ESD precautions when performing this replacement procedure.

### Removal

1. Remove the RF Assembly. Refer to the removal procedure "A8 3.0 GHz RF Assembly" on page 307.

**Figure 6-46 YTM Deck Cables**

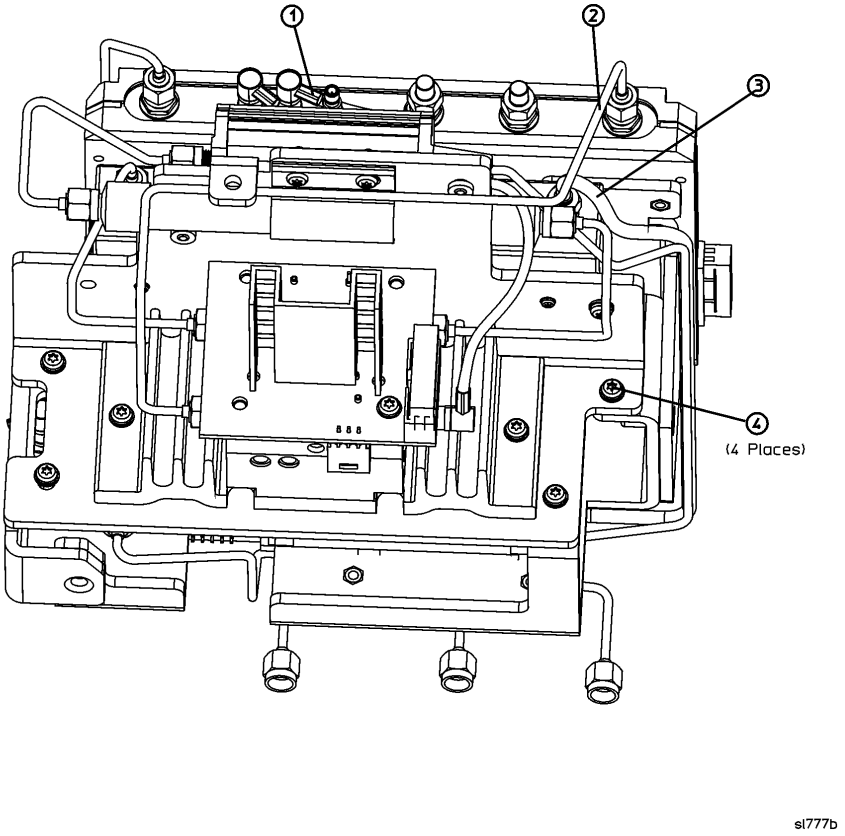


2. Refer to Figure 6-46, and position the A8 RF Assembly upright on the work bench.
3. Disconnect the SMB cables **(1)** from LOIS.
4. Disconnect the SMA semi-rigid cable **(2)** from LOIS.
5. Disconnect the SMA semi-rigid cable **(3)** to the input attenuator.
6. Disconnect the SMA semi-rigid cable **(4)** to the dc block assembly.
7. Disconnect the ribbon cable **(5)** from the YTM-mixer/filter assembly.
8. Remove the four screws **(6)**, then remove the sub-bracket from the microcircuit bracket.

**Figure 6-47 Second Converter, Bottom View**

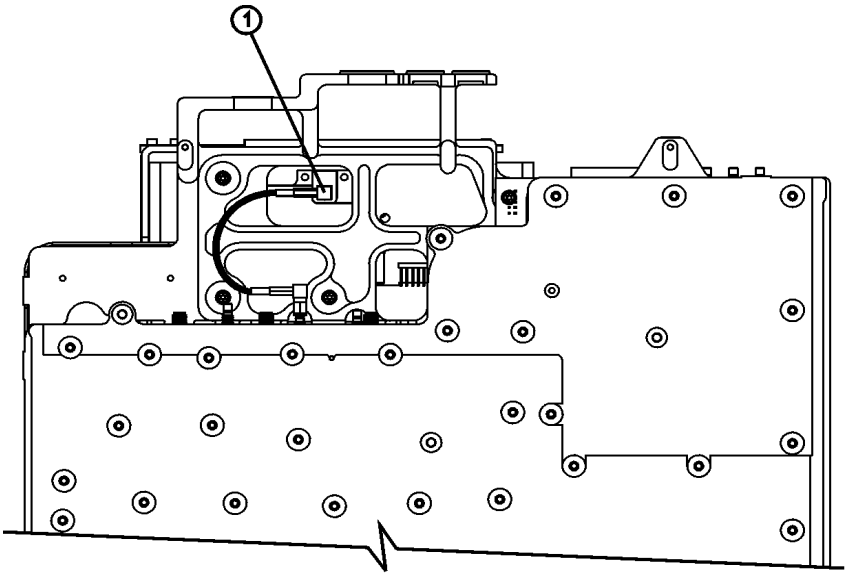


sl776b

**Figure 6-48 Second Converter Hardware**

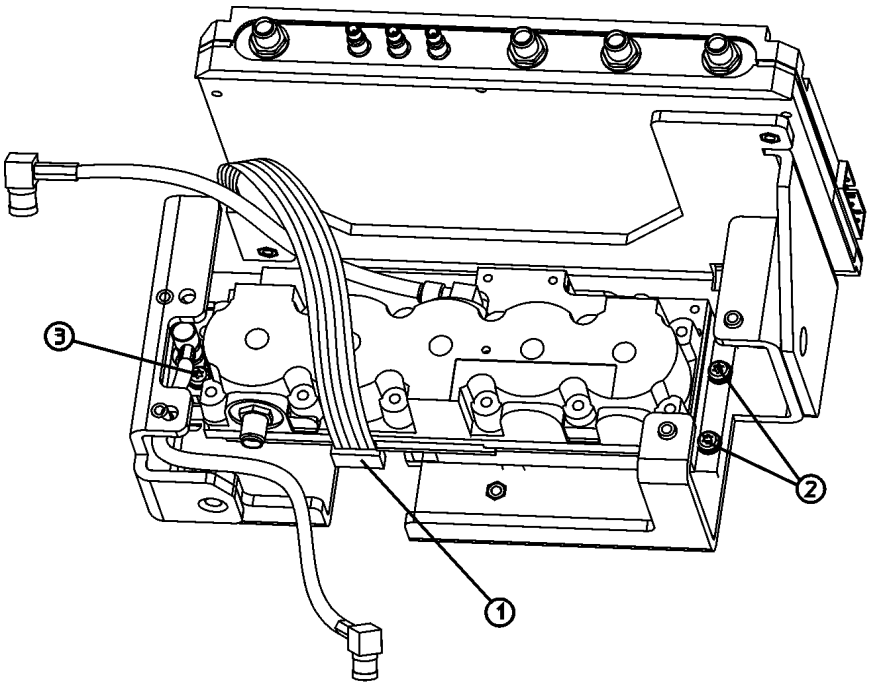


sl778b

9. Refer to Figure 6-47. Disconnect the SMB cable **(1)** from the bottom side of the second converter.
10. Refer to Figure 6-48. Disconnect the ribbon cable **(1)**.
11. Remove the two screws **(2)** and then the single screw **(3)**.
12. Remove the second converter assembly.
13. Remove any of the remaining cables and transfer them to the new second converter. Tighten the SMA cables to 10 inch-pounds.

**Replacement**

1. Refer to Figure 6-48. Install the second converter assembly with the single screw **(3)**, but don't tighten it yet.

**NOTE** The screws that secure the second converter in place are slightly longer than the other assembly screws.

2. Install the other two screws **(2)**, and tighten all three screws to 9 inch-pounds.
3. Connect the ribbon cable **(1)** and place it as shown in Figure 6-48.
4. Refer to Figure 6-46. Replace the sub-bracket to the microcircuit bracket and replace the four screws **(4)**. Tighten them to 9 inch-pounds.
5. Reconnect the SMB cable **(1)** to LOIS.
6. Reconnect the SMA semi-rigid cable **(2)** from LOIS.
7. Reconnect the SMA semi-rigid cable **(3)** to the input attenuator.
8. Reconnect the SMA semi-rigid cable **(4)** to the dc block assembly.
9. Reconnect the ribbon cable **(5)** to the YTM-mixer/filter assembly.
10. Replace the RF Assembly. Refer to the replacement procedure "A8 3.0 GHz RF Assembly" on page 307.

## RF Input Connector

(E4402B, E4403B, E4404B, E4405B, E4407B, and E4408B)

**CAUTION** Use ESD precautions when performing this replacement procedure.

**Removal**

1. Remove the analyzer chassis cover. Refer to the removal procedure "Chassis Cover" on page 252.
2. Remove the A1 front frame assembly. Refer to the removal procedure "A1 Front Frame Assembly" on page 254.
3. Remove the RF connector. For a Type-N connector, refer to the removal procedure "Type-N Connector" on page 320. For a APC 3.5, refer to the

removal procedure “APC 3.5 Connector” on page 320.

**Figure 6-49 RF Connector, Type-N and APC 3.5**

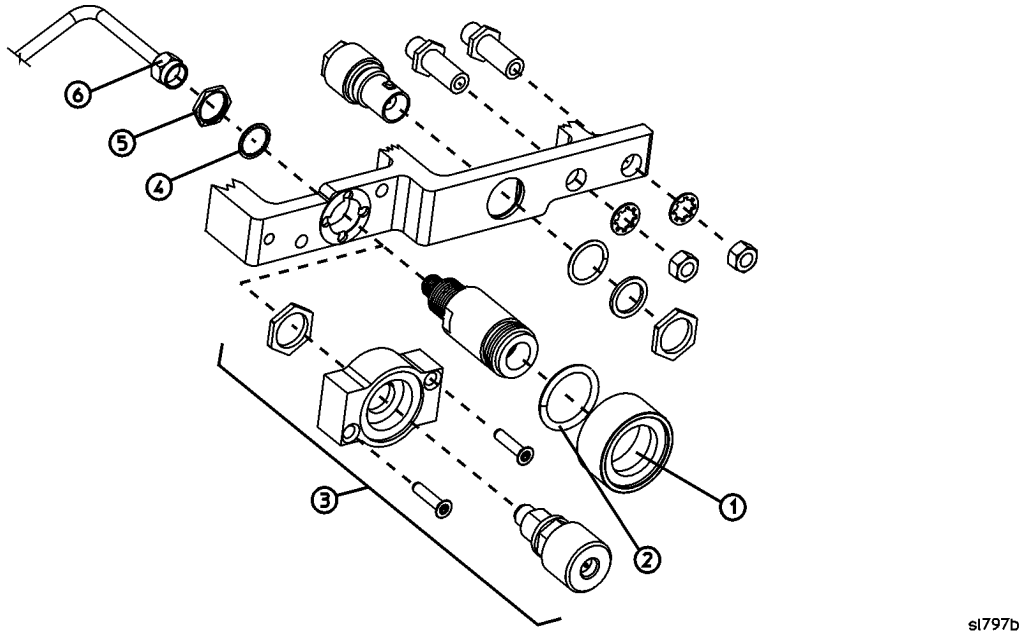


### Type-N Connector

a. Refer to Figure 6-49. Gently twist the water seal **(1)** and remove it from around the input connector. Make sure the O-ring **(2)** is retained within the water seal.

b. Use a 5/16” wrench to remove the semi-rigid **(6)** cable from the input connector.

c. Loosen the nut **(5)** from the back side of the input connector with a 9/16” wrench, and gently remove the connector, retaining the washer **(4)** and nut.

### APC 3.5 Connector

a. Refer to Figure 6-49. Use a 5/16” wrench to remove the semi-rigid **(6)** cable from the input connector.

b. Remove the two screws that fasten the APC 3.5 connector assembly **(3)** to the frame.

c. Remove the connector assembly.

**Replacement**

1. Install the RF connector. For a Type-N connector, refer to the replacement procedure "Type-N Connector" on page 320. For a APC 3.5, refer to the replacement procedure "APC 3.5 Connector" on page 320.

   **Type-N Connector**

   a. Refer to Figure 6-49. Reattach the input connector and secure with the washer **(5)**, and nut **(4)**. Tighten the nut to 21 inch-pounds.

   b. Reattach the semi-rigid cable **(6)** to the input connector with a 5/16" wrench. Tighten it to 10 inch-pounds.

   c. Make sure the O-ring **(2)** is still inside the water seal **(1)**, then gently twist and push the water seal onto the input connector.

   d. Continue with step 2 below.

   **APC 3.5 Connector**

   a. Refer to Figure 6-49. Reattach the APC 3.5 input connector assembly (2) and secure with the two screws. Tighten them to 9 inch-pounds.

   b. Reattach the semi-rigid cable **(6)** to the input connector with a 5/16" wrench. Tighten it to 10 inch-pounds.

   c. Continue with step 2 below.

2. Reconnect the A1 front frame to the chassis. Refer to the replacement procedure "A1 Front Frame Assembly" on page 254.

3. Replace the chassis cover. Refer to the replacement procedure "Chassis Cover" on page 252.

4. Replace the outer case. Refer to the replacement procedure "Instrument Outer Case" on page 250.

5. Refer to Table 7-2 on page 330 for the related adjustments and performance verification tests required for each assembly.

## 1.5 GHz RF Input Connector

**CAUTION** Use ESD precautions when performing this replacement procedure.

**Removal**

1. Remove the analyzer chassis cover. Refer to the removal procedure "Chassis Cover" on page 252.

2. Remove the A1 front frame assembly. Refer to the removal procedure "A1 Front Frame Assembly" on page 254.

3. Remove the RF assembly. Refer to the removal procedure "A8 1.5 GHz RF Assembly" on page 304.

**Figure 6-50 A8J10 RF Input Connector**

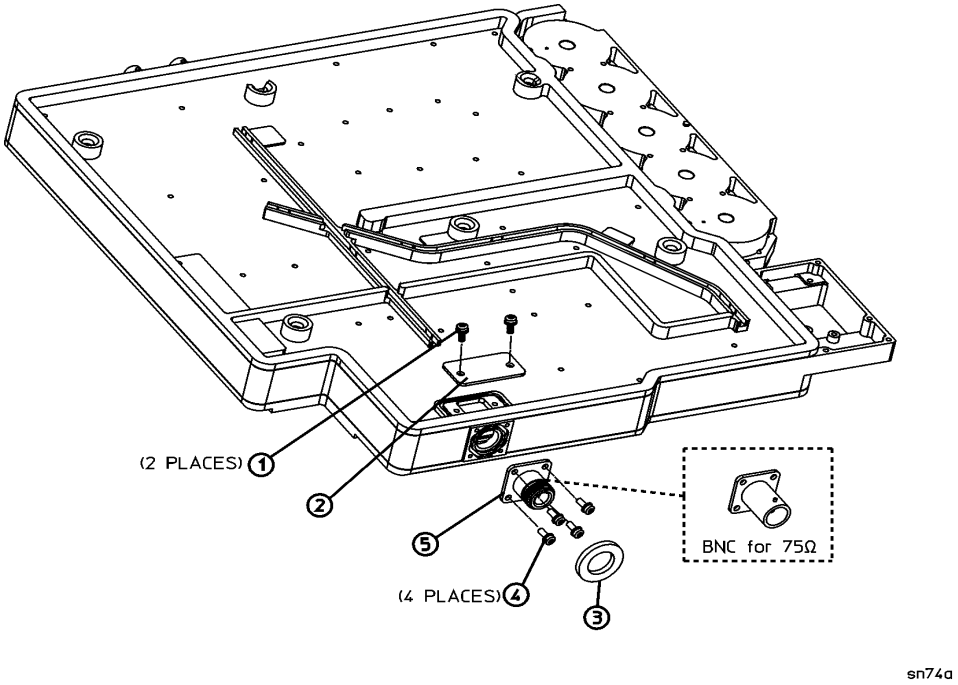


4. Refer to Figure 6-50. Remove the two screws **(1)** that secure the input connector cover **(2)**, and remove the cover.
5. Remove the water seal **(3)** from around the input connector.
6. Remove the four screws **(4)** that secure the input connector.
7. Apply heat to the center conductor with a soldering iron, and gently pull out the input connector.

### Replacement

1. Remove excess solder from the RF board pad.
2. Refer to Figure 6-50. Insert the RF connector and fasten in place with the four screws **(4)**. Tighten them to 9 inch-pounds.
3. Replace the water seal **(3)** around the input connector.
4. Resolder the center conductor to the RF board.
5. Replace the input connector cover **(2)**, and secure it with the two screws **(1)**. Tighten them to 9 inch-pounds.
6. Replace the RF assembly. Refer to the replacement procedure "A8 1.5 GHz RF Assembly" on page 304.
7. Replace the A1 front frame assembly. Refer to the replacement procedure "A1 Front Frame Assembly" on page 254.

# 7 Post-Repair Procedures

## What You Will Find in This Chapter

The tables in this chapter list the adjustments that should be performed if there is a performance test failure or an assembly has been repaired or replaced. Automated software is required to provide most of the analyzer adjustments. Never perform adjustments as routine maintenance. Adjustments should be performed after a repair or a performance test failure. For information on installing and using the adjustment software, refer to Chapter 8, “Performance Verification and Adjustment Software”.

## Safety

Familiarize yourself with the safety symbols marked on the analyzer and read the general safety considerations and the safety note definitions in the front of this guide, *before* you begin the procedures in this chapter.

# Before You Start

There are three things you should do before starting an adjustment procedure:

- Check that you are familiar with the safety symbols marked on the analyzer and read the general safety considerations and the symbol definitions given in the front of this service guide.
- Check that the analyzer has been turned on and allowed to warm up for at least 30 minutes at room temperature before making any adjustments. The analyzer *must* be allowed to stand at room temperature at least 2 hours prior to the 30 minute warm-up.
- Read the rest of this section.

## Finding abnormal indications during adjustments

If the indications received during an adjustment do not agree with the normal conditions given in the adjustment procedures, a fault exists in your analyzer. The fault should be repaired *before* proceeding with any further adjustments. Refer to the troubleshooting and repair information in Chapter 1 of this guide.

## Periodically verifying calibration

The analyzer requires periodic verification of operation. Under most conditions of use, you should test the analyzer at least once a year with the complete set of performance verification tests located in the calibration guide for your analyzer or using the performance verification and adjustment software.

When test results show proper operation and calibration, no adjustments are necessary. However, if test results indicate that the instrument does not meet specifications, the cause should be determined and rectified. Refer to the troubleshooting information in Chapter 1 before attempting to recalibrate.

## Replacing or repairing an assembly

If one or more analyzer assemblies has been replaced or repaired, related adjustment procedures should be done prior to verifying operation. Refer to Table 7-2 to determine which adjustment to perform after replacing or repairing an assembly. Find the assembly that has been repaired or replaced in the left-hand column. Then perform the adjustments marked across the adjustment column for that assembly. It is important that adjustments are performed in the order indicated to ensure that the instrument meets all of its specifications.

## List of Tests and Adjustments for Calibration

To perform calibration:

1. Run ALL applicable performance verification tests listed in Column 1 of Table 7-1.
2. If any of the performance verification tests fail, perform the appropriate calibration adjustments listed in Column 2 of Table 7-1 which corresponds to the failure.
3. Repeat ALL of the performance verification tests listed in Column 1 of Table 7-1 if any calibration adjustments were made in step 2. This will confirm that there is no interaction between adjustments which could negatively impact performance.

**NOTE** If performance verifications fail and there are no corresponding calibration adjustments to be performed, or if failures continue to occur after calibration adjustments have been performed, this indicates a hardware problem. Review the troubleshooting tips in Column 3 of Table 7-1 for possible defective assemblies.

**Table 7-1 Calibration Requirements**

| Test Number | Column 1<br>Performance Verification Tests | Column 2<br>Calibration Adjustments | Column 3<br>Troubleshooting Tips |
|---|---|---|---|
| 1 | 10 MHz Reference Output Accuracy | 10 MHz Reference Adjustment | RF |
| 2 | 10 MHz Precision Frequency Reference Output Accuracy | 10 MHz Reference Adjustment | RF |
| 3, 4 | Frequency Readout and Marker Frequency Accuracy | None | IF/Processor/RF |
| 5, 6 | Frequency Span Readout Accuracy | None | RF |
| 7 | Noise Sidebands | IF Amplitude | RF/IF |
| 8 | System Related Sidebands | IF Amplitude | RF |
| 9 | Residual FM | None | RF |
| 10 | Sweep Time Accuracy | None | RF |
| 11 | Display Scale Fidelity | IF Amplitude<br>Align Now, All | RF<br>IF |
| 12 | Input Attenuation Switching Uncertainty | 50 MHz Amplitude Reference | RF |
| 13, 14 | Reference Level Accuracy | IF Amplitude<br>Align Now, All | RF<br>IF |

**Table 7-1 Calibration Requirements**

| Test Number | Column 1 Performance Verification Tests | Column 2 Calibration Adjustments | Column 3 Troubleshooting Tips |
|---|---|---|---|
| 15 | Resolution Bandwidth Switching Uncertainty | IF Amplitude | IF |
| 16, 17 | Absolute Amplitude Accuracy (Reference Settings) | 50 MHz Amplitude Reference<br>IF Amplitude | RF<br>IF |
| 18, 19 | Overall Absolute Amplitude Accuracy | None | RF |
| 20 | Resolution Bandwidth Accuracy | IF Amplitude | RF/IF |
| 21, 22, 23 | Frequency Response | Frequency Response | RF |
| 24, 25, 26 | Frequency Response (Preamp On) | Frequency Response | RF |
| 27, 28 | Other Input-Related Spurious Responses | None | RF |
| 29, 30, 31 | Spurious Responses | None | RF |
| 32, 33 | Gain Compression | None | RF, IF |
| 34, 35<br>36, 37 | Displayed Average Noise Level | Frequency Response | RF, IF |
| 38 | Residual Responses | None | RF, IF |
| 39. | Fast Time Domain Amplitude Accuracy | None | Option AYX |
| 40, 41 | Tracking Generator Absolute Amplitude and Vernier Accuracy | Tracking Generator ALC and Tracking Generator Frequency Slope | TG |
| 42, 43 | Tracking Generator Level Flatness | Tracking Generator ALC and Tracking Generator Frequency Slope | TG |
| 44, 45 | Tracking Generator Harmonic Spurious Outputs | None | TG |
| 46, 47 | Tracking Generator Non-Harmonic Spurious Outputs | None | TG |
| 48 | Tracking Generator LO Feedthrough Amplitude | LO Power (TG) | TG |
| 49 | Gate Delay Accuracy and Gate Length Accuracy | None | |
| 50 | Gate Mode Amplitude Error | None | |
| 51 | First LO Output Amplitude Accuracy | LO Power | |
| 52 | IF Input Accuracy | IF Input Correction | |

**Table 7-1 Calibration Requirements**

| Test Number | Column 1 Performance Verification Tests | Column 2 Calibration Adjustments | Column 3 Troubleshooting Tips |
|---|---|---|---|
| 53 | Comms Frequency Response | Frequency Response | |
| 58 | GSM — Phase and Frequency | Align Now, All | |
| 59 | Comms Absolute Amplitude Accuracy | 50 MHz Amplitude Reference,<br>IF Amplitude,<br>Align Now, All | |

# List of Tests and Adjustments for Post-Repair

Table 7-2 lists the adjustments and performance tests needed after an assembly repair or replacement. Performance tests are located in the *ESA Spectrum Analyzers Calibration Guide*.

**Table 7-2 Adjustments and Tests for Replaced or Repaired Assemblies**

| Assembly changed or repaired | Perform the following adjustments in the order listed | Perform the following performance tests after the adjustments are completed |
|---|---|---|
| A1 Front Frame Assembly | Front Panel Internal Test | Displayed Average Noise Level<br>Residual Responses |
| A2 1.5 GHz Tracking Generator Assembly | Tracking Generator ALC[a]<br>Tracking Generator Frequency Slope[a]<br>Align Now, All | Absolute Amplitude and Vernier Sweep Accuracy<br>Tracking Generator Level Flatness<br>Harmonic Spurious Outputs<br>Non-Harmonic Spurious Outputs |
| A2A2 BITG Microcircuit Assembly | Align Now, TG<br>L. O. Power Adjustment<br>BITG only[a] | Absolute Amplitude and Vernier Sweep Accuracy<br>Tracking Generator Level Flatness<br>Harmonic Spurious Outputs<br>Non-Harmonic Spurious Outputs |
| A3 IF Assembly | Align Now, All | Reference Level Accuracy<br>Display Scale Fidelity<br>Overall Amplitude Accuracy<br>Resolution Bandwidth Switching Uncertainty |
| A4 Processor Assembly | Processor Initialization | Reference Level Accuracy<br>Scale Fidelity<br>Absolute Amplitude Accuracy<br>Displayed Average Noise Level |
| A4MAU58 Processor Battery | Processor Initialization | None |
| A5 Power Supply Assembly | None | Noise Sidebands<br>System-Related Sidebands<br>Displayed Average Noise Level<br>Residual FM |
| A6 Speaker /Floppy Assembly | None | None |
| A7 Motherboard | Align Now, All | None |
| A7A4 Frequency Extension Assembly | YTF Adjust<br>LO Power<br>Frequency Response | System Related Sidebands<br>Frequency Response<br>Displayed Average Noise Level |
| A7A5 Fast ADC Assembly | None | None |

**Table 7-2 Adjustments and Tests for Replaced or Repaired Assemblies**

| Assembly changed or repaired | Perform the following adjustments in the order listed | Perform the following performance tests after the adjustments are completed |
|---|---|---|
| A7A6 FM Demod Assembly | None | None |
| A7A7 Digital Demod DSP Assembly | None | Sweep time accuracy<br>GSM Phase/Frequency[b]<br>Fast Time Domain Accuracy |
| A7A8 Digital Demod RF Assembly | 50 MHz Amplitude Reference<br>IF Amplitude<br>Align Now, All | Comms Frequency Response<br>Absolute Amplitude Accuracy<br>Display Scale Fidelity<br>Reference Level Accuracy<br>Comms Absolute Power Accuracy<br>GSM Phase/Frequency[b] |
| A7A9 Enhanced ACPR Dynamic Range Assembly | Align Now, All | Displayed Average Noise Level<br>Residual Responses<br>Noise Sidebands<br>Noise Sidebands, Wide Offsets |
| A7A10 Bluetooth FM Demod Assembly | None | None |
| A7A13 Noise Source Driver Assembly | None | Displayed Average Noise Level<br>Residual Responses |
| A8 RF Assembly | 10 MHz Reference[a]<br>IF Amplitude[a]<br>50 MHz Amplitude Reference[a]<br>Frequency Response[a] | 10 MHz Reference Accuracy<br>Noise Sidebands<br>System-Related Sidebands<br>Residual FM<br>Frequency Span Readout Accuracy<br>Frequency Readout and Marker Count Accuracy<br>Absolute Amplitude Accuracy<br>Frequency Response<br>Spurious Responses<br>Gain Compression<br>Other Input Related Spurious Responses<br>Displayed Average Noise Level<br>Residual Responses |
| A8A1 Precision Frequency Reference | 10 MHz Reference | 10 MHz Reference Out Accuracy<br>Residual FM |

**Table 7-2 Adjustments and Tests for Replaced or Repaired Assemblies**

| Assembly changed or repaired | Perform the following adjustments in the order listed | Perform the following performance tests after the adjustments are completed |
|---|---|---|
| A8A1 3.0 GHz RF Assembly | 10 MHz Reference[a]<br>IF Amplitude[a]<br>50 MHz Amplitude Reference[a]<br>Frequency Response<br><br>IF Input Correction (Option AYZ only) | 10 MHz Reference Accuracy<br>Noise Sidebands<br>System-Related Sidebands<br>Residual FM<br>Frequency Span Readout Accuracy<br>Frequency Readout and Marker Count Accuracy<br>Absolute Amplitude Accuracy<br>Frequency Response<br>Spurious Responses<br>Gain Compression<br>Other Input Related Spurious Responses<br>Displayed Average Noise Level<br>Residual Responses |
| A8A2 Second Converter | IF Input Correction (Option AYZ only) | Displayed Average Noise Level<br>Frequency Response<br>Residual FM<br>IF Input Accuracy (Option AYZ only) |
| A8A4 LOIS LO Amp/IF Switch | LO Power<br>IF Input Correction (Option AYZ only) | System Related Sidebands<br>Frequency Response<br>IF Input Accuracy (Option AYZ only) |
| A8A5 Input Attenuator | Frequency Response | Input Attenuator Switching Uncertainty<br>Frequency Response |
| A8A6 RYTHM | YTF Adjust<br>Frequency Response | Gain Compression<br>Frequency Response |

a. Only necessary after a repair to the assembly
b. Only with Option BAH

# 8 Performance Verification and Adjustment Software

## What You Will Find in This Chapter

Information about instruments with Option 226 or Option 290. ESA specific field test software information. A link to the Field Calibration Software webpage.

# Introduction

## Instruments with Option 266 or Option 290

Instruments with Option 266, 8566 Series Programming Code Compatibility, installed and with the language set to something other than SCPI will not be able to execute or process SCPI commands. The software will notify you and set the language to SCPI prior to running the performance verification software.

Instruments with Option 290, 8590 Series Programming Code Compatibility, installed will not be able to execute or process SCPI commands. Therefore, Option 290 will need to be uninstalled prior to running the performance verification software. To uninstall or reinstall Option 290, refer to “Uninstalling/Installing Option 290” in the 8590 Series Programming Compatibility Guide.

You can find a free download for Option 290 at:
http://www.home.agilent.com/agilent/software.jspx?cc=US&lc=eng&ckey=1000000936:epsg:sud&nid=-536902958.536881907.02&id=1000000936:epsg:sud

## N7800A Calibration and Adjustment Software

http://www.agilent.com/find/calibrationsoftware provides detailed information about the field test software.

## ESA Field Test Software

Go to http://calsw.tm.agilent.com. Scroll down to the table and locate the ESA platform. Select the “Help” link. This page has links to:

- Getting Started
- Required Equipment
- Performance Tests
- Adjustments
- ESA utilities

# Index


**Numerics**

1.5 GHz tracking generator assembly troubleshooting, 40
3.0 GHz RF assembly, 332
3.0 GHz tracking generator, 45
50 ohm RF bridge, 162
50 ohm/75 ohm minimum loss pad, 159
75 ohm matching transformer, 159, 161
75 ohm RF bridge, 162
8566 Series Programming Code Compatibility, 149

**A**

A1 display/front panel, 110
  A1A1 front panel interface board, 110
  A1A4 backlight supply, 110
  A6 speaker board, 110
  display, 110
A2 1.5 GHz tracking generator assembly troubleshooting, 40
A2 3.0 GHz tracking generator assembly troubleshooting, 45
A3 IF assembly, 102
  21.4 MHz bandpass filters, 102
  cal attenuator, 102
  downconverter, 103
  interconnections to other assemblies, 103
  linear detector, 102
  log detector, 102
A4 processor assembly, 104
  A4A1 flash SIMM, 107
  A4A2 DRAM SIMM, 107
  analog section, 104
  analyzer battery information, 105
  interconnections to other assemblies, 106
A4 processor assembly troubleshooting, 37
A5 power supply assembly, 108
  interconnections to other assemblies, 108
A7 motherboard, 109
A7A4 frequency extension, 101
A7J1 power supply connector, 118
A7J10 through A7J16 analog card/J10 tracking generator connector, 126
A7J2 IF assembly connector, 119
A7J20 speaker board connector, 128
A7J21 and A7J26 I/O assembly connector, 130
A7J4 RF connector, 120
A7J6 processor digital connector, 122
A7J7 processor analog connector, 124
A8 RF assembly, 93, 97
  E4401B and E4411B, 96
A8A1 3.0 GHz RF assembly, 98
A8A1A1 reference/third converter, 99
A8A1A2 front end/LO, 99
A8A2 second converter, 100
A8A3 dc block, 100
A8A4 amplifier/IF switch (LOIS), 100
A8A5 input connector, 101
A8A6 YIG-tuned filter/mixer (RYTHM), 101
A8FL1 3.1 GHz low-pass filter (LPF), 101
A8J10 input connector, 98
abbreviations, 167
ac probe, 159
accessories, 159
  50 ohm/75 ohm minimum loss pad, 159
  75 ohm matching transformer, 159
  ac probe, 159
  battery pack, 161
  broadband preamplifiers, 159
  carrying strap, 160
  external keyboard, 160
  GPIB cable, 160
  harmonic mixers, 160
  Parallel Interface Cable, 161
  preselected millimeter mixers, 160
  printer, 161
  RF bridge, 162
  RF limiters, 161
  RS-232 cable, 162
  transient limiters, 161
ACPR Dynamic Range Extension, 149
acronyms, 167
adjusting the analog converters, 32
adjustment software, 15
Agilent Technologies, contacting, 241
align now, 34
alignment signal, 31
amplifier 21.4 MHz, 95
amplifiers, 159
analyzer battery, 105
APC 3.5 input connector, 320
assembly
  1.5 GHz RF, 304
  3.0 GHz RF, 307
  attenuator, 313
  front frame, 254, 258
  IF, 102, 281
  LOIS, 312
  motherboard, 293
  power supply, 108
  processor, 283, 285
  second converter, 317
  speaker, 291
  tracking generator, 274
  tracking generator, 3.0 GHz, 279
  YTM, 315
auto align now, 34
auto align off, 28

**B**

B7D and B7E digital demod assemblies troubleshooting
  digital demod RF, DDRF, 47
  digital signal processing, DSP, 47
backlight, 269
backlight supply, 110
backpack, 150
basic checks, 23
battery, 330
battery pack, 161
Benchlink, 150
Benchlink Web Remote Control Software, 150
BITG microcircuit assembly, 330
block diagrams, 133–138
blown fuse, 22
Bluetooth
  FM Demodulation, 150
  General Purpose Bundle, 150
  Measurement Personality, 150
  Premium Bundle, 150
bootrom self-test, 38
broadband preamplifiers, 159

**C**

cable
  GPIB, 160
  parallel interface, 161
  RS-232, 162
Cable TV Measurement Personality, 151
calibration
  verifying, 326
calibration requirements, 327
carrying case, 150
carrying strap, 160
cdmaOne operation, 49
chassis cover, 252
checking power supply, 23
checking the basics, 19
clearing EPROM, 39
clearing RAM, 39
connector
  A7J1 power supply, 118
  A7J10 through A7J16 analog card/J10 tracking generator, 126
  A7J2 IF assembly, 119
  A7J20 speaker board, 128
  A7J21 and A7J26 I/O assembly, 130
  A7J4 RF, 120

A7J6 processor, digital, 122
A7J7 processor, analog, 124
connector, type-N, 320
cooling fan, 22
corrected performance, 27
cover, 250
chassis, 252
inner, 252

**D**

DAC
controlling, 32
tuning, 32
dc probes
use of, 159
dead instrument, 21
demodulation
Bluetooth FM, 150
detector modes, 27
diagnostic routines, 32
display, 110
display backlight, 269
display/front panel, 110
A1A1 front panel interface board, 110
A1A4 backlight supply, 110
A6 speaker board, 110
displays, external, 25
Distance to Fault Measurement Personality, 153
distorted signal, 30
downconversion, 61, 71
downconverting, 59

**E**

electrostatic discharge, 15
EMI
Low Emission (Option 060), 156
EPROM, 39
EPROM, clearing, 39
ESD Information, 15
excessive loss, 60
external keyboard, 160

**F**

fan, 22, 289
fast ADC assembly, 330
firmware queries, 41
flash EPROM, 39
flatness tolerance, 42
floppy speaker assembly, 291
FM demod assembly, 331
frequency extension assembly, 330
frequency response, 59
front frame assembly, 254, 258, 330
front panel interface board, 110
front panel rpg, 266
fuse, 22

**G**

GPIB, 155
GPIB cable, 160
GSM Measurement Personality, 155

**H**

harmonic output levels, 42
high band block diagram, 86
high band quick check, 81
high band troubleshooting points, 84
high noise floor, 30
high signal amplitude, 60, 82
horizontal trace, checking, 29
how to return your analyzer for service, 242

**I**

IF assembly, 102, 281, 330
21.4 MHz bandpass filters, 102
cal attenuator, 102
downconverter, 103
interconnections to other assemblies, 103
linear detector, 102
log detector, 102
IF assembly connector, 119
IF gain, 33
IF problem, 27
IF problem isolation, 27
initial checks of processor, 37
inner cover, 252
inner shield, 252
inoperative analyzer, 21
inoperative analyzer troubleshooting, 21
input attenuator, 313, 332
input connector, 319
1.5 GHz RF, 321
connector, 319
input connector, APC 3.5, 320
instrument outer case, 250
interface bus
GPIB, 155
RS-232, 157
internal diagnostic routines, 32
introduction
performance verification, 335
performance verification tests, 335
isolating amplitude failures, 61

**K**

keypad/flex circuit, 267

**L**

LCD display, 25
LCD display troubleshooting, 25
LED patterns, 38
lens/keypad assembly, 268
limiters
RF and transient, 161
line fuse, 22
LO, 312
LO amp/IF switch asse, 312
LO amp/IF switch assembly, 312
LO problem, 27
LO problem isolation, 27
load default, 35
log amplifier errors, 33
LOIS, 100
LOIS LO amp/IF switch, 332
low band troubleshooting points, 74, 75
low signal amplitude, 82
low signal level, 29

**M**

media door/bezel, 270
mixers
External Mixing (Option AYZ), 153
harmonic, 160
preselected millimeter, 160
mnemonics, 111
mnemonics pin locations, 114
motherboard, 109, 330
motherboard assembly, 293
motherboard mnemonics, 111
motherboard mnemonics and connectors, 111–132
multipliers, 171

**N**

N2714A test and adj. software, 15
non-harmonic output levels, 42

**O**

OCXO, 96
OCXO precision frequency reference, 311
Option 106, 150
Option 1AX, 158
Option 226, 157
Option B70, 150
Option B7B (TV trigger and picture on screen), 158
Options, 147
RS-232 and parallel interface, 150, 158
ordering options, 148
outer case, 250

output power, TG, 44

**P**

packaging, 242
packaging materials, 242, 244
Parallel Interface Cable, 161
parts
  assembly level, 172
  how to order, 165
  reference designators, 166
  replaceable, 172, 238
password, 34
performance test software, 15
performance verification
  introduction, 335
  software, 334
performance verification tests
  introduction, 335
  software, 334
Personality
  Bluetooth, 151
  Cable TV, 151
  Distance to Fault, 153
  GSM, 155
Phase Noise Measurement Personality, 157
phase noise personality, 157
PLL operation, 32
post-repair adjustments, 330
power amplifiers, 159
power supply, 23, 287
power supply assembly, 108, 330
  interconnections to other assemblies, 108
power supply connector, 118
power sweep, 44
power-up problems, 20
preamplifiers, 159
precision frequency, 311
precision frequency reference, 331
printer, 161
printer connector
  parallel, 155, 157
probe power connector voltages, 23
probes
  ac and dc, 159
problems at power-up, 20
processor assembly, 104, 283, 285, 330
  A4A1 flash SIMM, 107
  A4A2 DRAM SIMM, 107
  analog section, 104
  analyzer battery information, 105
  interconnections to other assemblies, 106
processor assembly troubleshooting, 37
processor, analog connector, 124
processor, digital connector, 122

**R**

RAM, clearing, 39
rear-panel battery information label, 106
reference, 311
reference designators, 166
remote control
  8566 Series Programming Code Compatibility, 149
  Benchlink Web Remote Control Software, 150
replaceable parts, 172, 238
restore system defaults, 35
returning your analyzer, 242
returning your analyzer for service, 242
RF, 64
RF assembly, 93, 97, 331
  21.4 MHz amplifier, 95
  A7A4 frequency extension, 101
  A8A1 3.0 GHz RF assembly, 98
  A8A1A1 reference/third converter, 99
  A8A1A2 front end/LO, 99
  A8A2 second converter, 100
  A8A3 dc block, 100
  A8A4 amplifier/IF switch(LOIS), 100
  A8A5 input connector, 101
  A8A6 YIG-tuned filter/mixer (RYTHM), 101
  A8FL1 3.1 GHz low-pass filter (LPF), 101
  A8J10 input connector, 98
  attenuator, 94
  first IF amplifier/filter/attenuator, 94
  first mixer, 94
  frequency reference, 95
  input connector, 93
  input protection, 93
  LO, 95
  LO, A8A1 OCXO, 96
  LO, first LO, 95
  LO, second LO, 96
  low-pass filter, 94
  second mixer, 94
RF assembly, 1.5 GHz, 304
RF assembly, 3.0 GHz, 307
RF bridge, 162
RF connector, 120
RF input connector, 319
RF input connector, 1.5 GHz, 321
RF limiters, 161
RF performance check, 59
RF problem, 27
RF quick check, 61
RF section block diagram, 64
RF section high band block diagram, 86
RF section performance, 61
RF section, low band block diagram, 76
RF section, verifying performance, 71
RF subassemblies, 311
RF troubleshooting points, 64, 73
RF troubleshooting, detailed, 63
RF troubleshooting, detailed, high band, 83
rpg replacement, 266
RS-232, 157
RS-232 Cable, 162
RS-232 cable, 162
RYTHM, 101, 315, 332

**S**

second converter, 317, 332
service menu password, 34
service tag, 242
shipping container, 244
software
  performance verification, 334
  performance verification tests, 334
speaker assembly, 291
speaker board, 110
speaker/floppy assembly, 330
spurious output, 43
system defaults, restoring, 35

**T**

test software, 15
TG LO unlock, 41
timebase function, 33
tracking generator, 40
tracking generator ALC adjustment, 42
tracking generator assembly, 330
tracking generator assembly, 3.0 GHz, 279
tracking generator assembly, 3.0 GHz troubleshooting, 45
tracking generator boards, 275
tracking generator output power, 44
tracking generator power sweep, 44
tracking generator, 1.5 GHz, 274
tracking generator, 3.0 GHz, 45
transient limiter, 161
troubleshoot the RF section, 59
troubleshooting
  LO, IF, video problems, 27
troubleshooting A2 1.5 GHz tracking generator assembly, 40

troubleshooting A2 3.0 GHz tracking generator assembly, 45
troubleshooting A4 processor assembly, 37
troubleshooting B7D and B7E digital demod assemblies
digital demod RF, DDRF, 47
digital signal processing, DSP, 47
troubleshooting inoperative analyzer, 21
troubleshooting LCD display, 25
troubleshooting the processor, 37
TV Trigger and Picture on Screen, 158
type-N connector, 320

**U**

uncorrected performance, 27
unleveled TG output, 40

**V**

verifying calibration, 326
verifying cdmaOne operation, 49
verifying the A3 IF assembly performance, 28
vernier accuracy tolerance, 42
VGA monitor, 25
vibration support bar, 272
video problem, 27
video problem isolation, 27
video shift, 33
visible align, 35

**Y**

YIG-tuned filter/mixer, 315
YTM, 315