Analyzer Repair Inc.

Test Equipment Repair & Calibration

Agilent E5071C

Agilent E5071C Configuration Guide

Need this instrument repaired or calibrated?

Analyzer Repair services spectrum analyzers, network analyzers, signal generators and other RF/microwave test equipment.

Free estimates - visit our website or email us to get started.

www.analyzerrepair.com **manager@analyzerrepair.com**

This manual is provided free as a reference by Analyzer Repair, Inc. All original content remains the property of its original manufacturer. Not for resale.

If you are the rights holder and object to this document being hosted here, email manager@analyzerrepair.com and it will be removed promptly.

CONFIGURATION GUIDE

E5071C Network Analyzer
E5092A Configurable Multiport Test Set

– 9 kHz to 4.5/6.5/8.5 GHz
– 100 kHz to 4.5/6.5/8.5 GHz (with bias tees)
– 300 kHz to 14/20 GHz (with bias tees)

Product Discontinuance Notice

The E5071C ENA and all associated options will be discontinued, and the last date this product can be ordered is May 31, 2021. For new product purchases, Keysight recommends the E5080B ENA Series Vector Network Analyzer. (2- or 4-ports, up to 53 GHz)

For more information, as well as to access to detailed migration guides, please visit:

www.keysight.com/find/e5080b

KEYSIGHT TECHNOLOGIES

This configuration guide describes standard configurations, options, accessories and peripherals for the E5071C ENA network analyzer. Refer to the ENA brochure for a complete description of the ENA network analyzer and the E5092A configurable multiport test set.

E5071C ENA Network Analyzer

The ENA is an integrated network analyzer with a two- or four-port S-parameter test set, a synthesized RF source, a 10.4-inch color LCD, and a hard disk drive.

Step 1: Select frequency range, number of test ports, and with or without bias tees

Up to 4.5 GHz range
9 kHz to 4.5 GHz (without bias tees)
E5071C-240 2-port S-parameter test set
E5071C-440 4-port S-parameter test set

100 kHz to 4.5 GHz (with bias tees)
E5071C-245 2-port S-parameter test set
E5071C-445 4-port S-parameter test set

Up to 6.5 GHz range
9 kHz to 6.5 GHz (without bias tees)
E5071C-260 2-port S-parameter test set
E5071C-460 4-port S-parameter test set

100 kHz to 6.5 GHz (with bias tees)
E5071C-265 2-port S-parameter test set
E5071C-465 4-port S-parameter test set

Up to 8.5 GHz range
9 kHz to 8.5 GHz (without bias tees)
E5071C-280 2-port S-parameter test set
E5071C-480 4-port S-parameter test set

100 kHz to 8.5 GHz (with bias tees)
E5071C-285 2-port S-parameter test set
E5071C-485 4-port S-parameter test set

Up to 14 GHz range[3]
300 kHz to 14 GHz (with bias tees)
E5071C-2D5 2-port S-parameter test set
E5071C-4D5 4-port S-parameter test set
Up to 20 GHz range[3]
300 kHz to 20 GHz (with bias tees)

1. Order the 82357B USB/GPIB interface at the same time if you want to control power meters with the E5071C. This will allow you to conduct scalar mixer calibrations (SMC), power calibrations, or receiver calibrations after power calibrations.
2. E5071C-TDR is a superset of E5071C-010. To add option TDR, you do not need to have option 010 already installed; however, you can have both option 010 and TDR installed in one instrument
3. Consider purchasing Keysight 20mm TORQUE WRENCH 8710-1764 for NMD 3.5 mm(f) test port connector.

E5071C-2K5 2-port S-parameter test set
E5071C-4K5 4-port S-parameter test set
Step 2: Select time base
E5071C-1E5 High stability time base
E5071C-UNQ Standard stability time base

Step 3: Select hard disk drive

E5071C-017 Removable hard disk drive
E5071C-019 Standard hard disk drive

Step 4: Choose additional options (Optional)

E5071C-008[1] Frequency offset mode
E5071C-TDR[2] Enhanced time domain analysis
E5071C-010 Time domain analysis
E5071C-790 Measurement Wizard Assistant software

Step 5: Choose accessories (Optional)

E5071C-1CM Rack mount kit,
E5071C-1CN Front handle kit
E5071C-1CP Rack mount and front handle kit
E5071C-810 Adds a keyboard
E5071C-820 Adds a mouse

Step 6: Choose certification documentation (Optional)

E5071C-1A7 ISO 17025 compliant calibration
E5071C-A6J ANSI Z540 compliant calibration

Documentation

The documentation for the E5071C is located in the Online Help system for the E5071C ENA network analyzer. The ENA Service Guide and Online Help system are also available on the Web site:
www.keysight.com/find/ena

Additional product information

For additional product information, refer to the ENA brochure available on the Web site:
www.keysight.com/find/ena

Receiver assignment

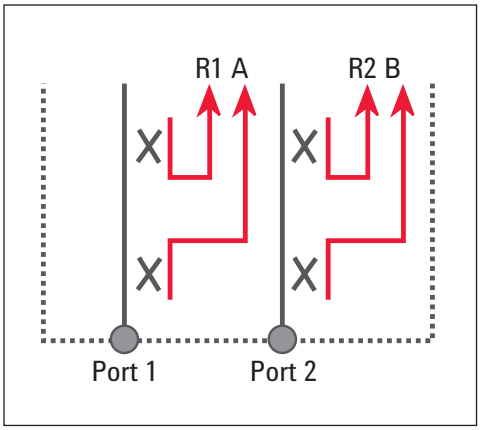

2-port test set option

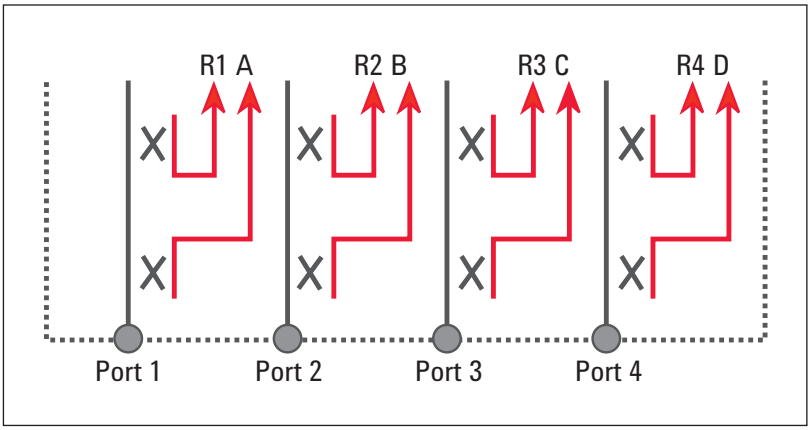

4-port test set option

E5071C ENA Network Analyzer

Options

To add options to a product, order the corresponding item number.

Option[1]	Description	Additional information
Test set		
Option 240	2-port test set, 9 kHz to 4.5 GHz without bias tees	
Option 440	4-port test set, 9 kHz to 4.5 GHz without bias tees	
Option 245	2-port test set, 100 kHz to 4.5 GHz with bias tees	
Option 445	4-port test set, 100 kHz to 4.5 GHz with bias tees	
Option 260	2-port test set, 9 kHz to 6.5 GHz without bias tees	
Option 460	4-port test set, 9 kHz to 6.5 GHz without bias tees	Test port connector: Type-N (f)
Option 265	2-port test set, 100 kHz to 6.5 GHz with bias tees	
Option 465	4-port test set, 100 kHz to 6.5 GHz with bias tees	
Option 280	2-port test set, 9 kHz to 8.5 GHz without bias tees	
Option 480	4-port test set, 9 kHz to 8.5 GHz without bias tees	
Option 285	2-port test set, 100 kHz to 8.5 GHz with bias tees	
Option 485	4-port test set, 100 kHz to 8.5 GHz with bias tees	
Option 2D5	2-port test set, 300 kHz to 14 GHz with bias tees	
Option 4D5	4-port test set, 300 kHz to 14 GHz with bias tees	Test port connector: 3.5 mm (m)[5]
Option 2K5	2-port test set, 300 kHz to 20 GHz with bias tees	
Option 4K5	4-port test set, 300 kHz to 20 GHz with bias tees	
Time base		
Option UNQ	Standard stability time base	
Option 1E5	High stability time base	Adds a higher stability time base reference.
Hard disk drive		
Option 017	Removable hard disk drive	
Option 019	Standard hard disk drive	
Additional features		
Option 008[2]	Frequency offset mode	Adds frequency-offset sweep and harmonic measurement capabilities.
Option TDR[3, 4]	Enhanced time domain analysis	Adds time domain transform, gating capabilities and graphical user interface to simplify time domain measurements.
Option 010	Time domain analysis	Adds time domain transform and gating capabilities.
Option 790[5]	Measurement wizard assistant software	Adds Measurement Wizard Assistant (MWA) software to simplify your multiport measurements with the 4-port ENA
Accessories		
Option 1CM	Rack mount kit	Adds a rack mount kit (part number: 1CM015A) for use without handles.
Option 1CN	Front handle kit	Adds a front handle kit (part number: 1CN005A).
Option 1CP	Rack mount and front handle kit	Adds a rack mount and front handle kit (part number: 1CN009A).
Option 810	Add keyboard	
Option 820	Add mouse	
Calibration documentation		
Option 1A7	ISO 17025 compliant calibration	
Option A6J	ANSI Z540 compliant calibration	

1. Options are ordered using the combined model/option number, e.g. E5071C-240.
2. Order the 82357B USB/GPIB interface at the same time if you want to control power meters with the E5071C. This will allow you to conduct scalar mixer calibrations (SMC), power calibrations, or receiver calibrations after power calibrations.
3. Option TDR is a superset of Option 010. Option TDR and Option 010 are mutually exclusive options and there is no need to purchase both options.
4. A 4-port ECal module (i.e. N4431B, N4433A) is recommended for the Option TDR using the 4-port E5071C.
5. When using an ECal module with the MWA calibration wizard, a 4-port ECal module (i.e. N4431B, N4433A) is required.

E5092A Configurable Multiport Test Set

This guide is intended to assist you in the ordering process of the E5092A configurable multiport test set for use with the 4-port ENA (E5070B, E5071B and E5071C). Multiple multiport measurement configurations, from 50 MHz to 20 GHz, can be made by connecting included semi-rigid cables to the E5092A's front panel which accesses its internal switches.

Step 1:[1] Select appropriate cable and adapter set for connection to the ENA (Optional)

E5092A-08C	Cables and adapters for connection to E5071C Option 440/445/460/465/480/485
E5092A-20C	Cables and adapters for connection to E5071C Option 4D5/4K5

Step 2: Choose accessories (Optional)

E5092A-1CM	Rack mount kit only
E5092A-1CN	Front handle kit only
E5092A-1CP	Rack mount kit with handle kit

Step 3: Choose calibration certification documentation (Optional)

E5092A-1A7	ISO 17025 compliant calibration
E5092A-A6J	ANSI Z540 compliant calibration

Block diagram

E5092A (Option 020)

Documentation

The documentation for the E5092A is located in the Online Help system for the E5071C ENA network analyzer. The ENA Service Guide and Online Help system are also available on the Web site:
www.keysight.com/find/ena

Additional product information

For additional product information, refer to the ENA brochure available on the Web site:
www.keysight.com/find/ena
www.keysight.com/find/multiport

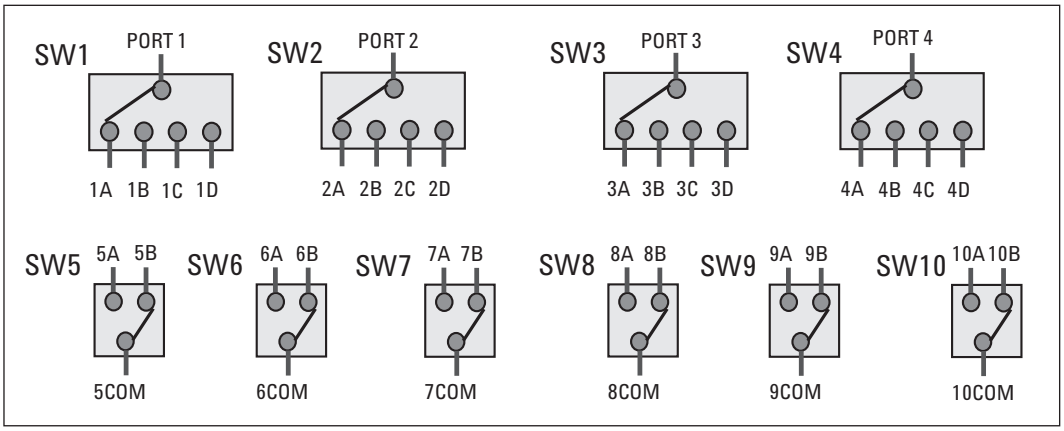

1. Semi-rigid cables are designed for connection to the E5071C and are not available for the E5070B, E5071B.

E5092A Configurable Multiport Test Set

Options

To add options to a product, order the corresponding option number.

Option[1]	Description	Additional information
Test set		
Option 020	20 GHz switching test set	Up to 22-port or 10-port full crossbar measurement.
Cable adapter set		
Option 08C	Cable and adapter set for E5071C Option 440/445/460/465/480/485 (4.5 GHz/6.5 GHz/8.5 GHz)	Adds SMA semi-rigid cables and type-N-to-SMA adapters for connection to the E5071C.
Option 20C	Cable and adapter set for the E5071C Option 4D5/4K5 (14 GHz/20 GHz)	Adds SMA semi-rigid cables and 3.5 mm-to-3.5 mm adapters for connection to the E5071C.
Accessories		
Option 1CM	Rack mount kit	Adds a rack mount kit (part number: 1CM015A) for use without handles.
Option 1CN	Front handle kit	Adds a front handle kit (part number: 1CN007A).
Option 1CP	Rack mount and front handle kit	Adds a rack mount and front handle kit (part number: 1CP008A).
Calibration documentation		
Option 1A7	ISO 17025 compliant calibration	
Option A6J	ANSI Z540 compliant calibration	

1. Options are ordered using the combined model/option number, e.g. E5092A-020.

ENA Network Analyzer (E5071C)

Additional software options

Option TDR Enhanced time domain analysis

Option TDR enables the ENA to view reflection and transmission responses in the time domain using a simple and intuitive graphical user interface. Use time domain to tune filters, gate out the response of fixtures and cables, characterize the impedance of transmission lines, and more.

Option 010 Time domain analysis

Option 010 enables the ENA to view reflection and transmission responses in the time domain. Use time domain to tune filters, gate out the response of fixtures and cables, characterize the impedance of transmission lines, and more.

Option 008 Frequency offset mode

Option 008 enables the ENA to set the receiver frequencies independently from where the source frequency is tuned. This ability is important for harmonic distortion measurements and for measuring frequency converting devices such as mixers and converters. Advanced calibration techniques for the ENA, such as scalar mixer calibration (SMC) or vector mixer calibration (VMC), require this option.

Option 790 Measurement Wizard Assistant

Option 790 provides a simple measurement procedure setup for the 4-port ENA with a multiport test set such as the E5092A. The software delivers an easy-to-use measurement wizard programs including a calibration wizard setup[1], which reduces operation time for complicated, time-consuming multiport measurements.

Time base options

Option UNQ Standard stability time base

Option UNQ provides following stability:
CW accuracy: ±5 ppm (specification)
Source stability: ±5 ppm (5 °C to 40 °C typical)

Option 1E5 High stability time base

Option 1E5 provides the following stability:
CW accuracy: ±1 ppm (specification)
Source stability: ±0.05 ppm (5 °C to 40 °C typical),
± 0.5 ppm/year

Hard disk drive options[2]

Option 019 Standard hard disk drive

Option 019 provides a fixed hard disk drive. The removable disk drive is not available.

Option 017 Removable hard disk drive

Option 017 provides a removable hard disk drive. You can remove or replace the hard disk drive for secure area operations. If a spare disk is needed, order E5071CU-058 Solid state drive kit.

Certification options

Option 1A7 ISO 17025 compliant calibration

Option 1A7 provides a complete set of measurements which test the unit to manufacturer's published specifications. Includes calibration label, ISO 17025 calibration certificate, and data report, and measurement uncertainties and guardbands on all customer specifications. Conforms to ISO 17025 and ISO 9001.

Option A6J ANSI Z540 compliant calibration

Option A6J provides a complete set of measurements which test the unit to manufacturer's published specifications. Includes pre- and post-adjustment data and measurement uncertainty information compliant with the ANSI/NCSL Z540 standard.

1. When using an ECal module with MWA calibration wizard, a 4-port ECal module (i.e. N4431B, N4433A) is required.
2. A solid state drive is used as storage from Sep 2012.

Measurement Accessories

A complete list of RF and microwave test accessories is available on our Web site:
www.keysight.com/find/accessories

Accessories are available with the following connector types: 50 Ω Type-N, 3.5 mm, 7 mm, 2.4 mm, 2.92 mm, 1.85 mm, 1.0 mm and waveguide.

Test port cables and a calibration kit/ECal module should be added for a complete measurement system.

Calibration kits

Coaxial measurements

Mechanical calibration kits include standards, such as opens, shorts and loads, which are measured by the network analyzer for increased measurement accuracy.

Electronic calibration (ECal) kits replace mechanical calibration standards with one solid-state calibration module that is controlled by the network analyzer via USB. ECal kits provide many different impedances to the test ports which enables a full two-port calibration to be performed quickly with a single connection. This technique reduces operator errors and connector wear and abrasion.

Choose a calibration kit for each connector type to be used.
Economy, includes:

- open standards (male and female)
- short standards (male and female)
- fixed-termination standards (male and female)

Standard, includes the devices in the economy kit and adds:

- sliding load standards1 (male and female) or a series of offset shorts

Precision, includes the devices in the economy kit and adds:

- 50 Ω airline(s) for TRL calibration
- TRL adapters

Waveguide measurements

For waveguide measurements, Keysight offers mechanical calibration kits that include:

- waveguide-to-coax adapters (X, P, K, R, Q, U, and V bands)
- precision waveguide section
- flush short circuit
- fixed terminations[2]
- straight section

Cables and adapter sets

Keysight offers the following types of cables:

- single cables: semi-rigid or flexible
- cable sets: semi-rigid or flexible

There are also adapter sets that protect the test port and convert the port to the desired connector interface. These kits contain:

- one male adapter
- one female adapter

To attain the best mechanical rigidity for device connection, use a single cable and the appropriate special adapter set. To attain the greatest flexibility for device connection, use a cable set.

1. A sliding load is not supported by the ENA.
2. An offset load is not supported by the ENA.

For devices with 50 Ω Type-N connectors

Mechanical calibration kits

- 85032F economy: DC to 9 GHz. Includes:
  85032-60017 Type-N (m) fixed load
  85032-60018 Type-N (f) fixed load
  85032-60013 Type-N (m) open
  85032-60014 Type-N (f) open
  85032-60016 Type-N (m) short
  85032-60015 Type-N (f) short
- Option 85032F-100 adds:
  85032-60021 Type-N (f) to Type-N (f) adapter
- Option 85032F-200 adds:
  85032-60019 Type-N (m) to Type-N (m) adapter
- Option 85032F-300 adds:
  85032-60020 Type-N (m) to Type-N (f) adapter
- Option 85032F-500 adds:
  85054-60001 Type-N (f) to 7 mm adapter (two included)
  85054-60009 Type-N (m) to 7 mm adapter (two included)

- 85054D economy: DC to 18 GHz. Includes:
  85054-60025 Type-N (m) short
  85054-60026 Type-N (f) short
  85054-60027 Type-N (m) open
  85054-60028 Type-N (f) open
  85054-60031 Type-N (f) to 7 mm adapter
  85054-60032 Type-N (m) to 7 mm adapter
  85054-60037 Type-N (f) to Type-N (f) adapter
  85054-60038 Type-N (m) to Type-N (m) adapter
  85054-60046 Type-N (m) fixed load
  85054-60047 Type-N (f) fixed load

Electronic calibration kits

- 85092C RF ECal: 300 kHz to 9 GHz, 2 ports
  Includes:
  Option 85092C-MOF module with:
  85092-60008 Type-N (f) to Type-N (m) RF ECal module
  Option Option 85092C-00M module with:
  85092-60009 Type-N (m) to Type-N (m) RF ECal module
  Option 85092C-00F module with:
  85092-60010 Type-N (f) to Type-N (f) RF ECal module
  Option 85092C-00A adds:
  85054-60037 Type-N (f) to Type-N (f) adapter
  85054-60038 Type-N (m) to Type-N (m) adapter

- N4431B Microwave ECal: 9 kHz to 13.5 GHz, 4 ports[1]
  Includes:
  Option 020 module with:
  N4431-60007 4 x Type-N (f) ECal module

N4431B-xxx mixed-connector options:

Connector type	Port A option	Port B option	Port C option	Port D option
3.5 mm (f)	101	201	301	401
3.5 mm (m)	102	202	302	402
Type-N 50 Ω (f)	103	203	303	403
Type-N 50 Ω (m)	104	204	304	404
7-16 (f)	105	205	305	405
7-16 (m)	106	206	306	406

1. Performance from 9 kHz to 300 kHz is valid only for the E5071C ENA network analyzer with firmware version A.09.10 or higher.

- N4432A Microwave ECal: 300 kHz to 18 GHz, 4 ports
  Includes:
  Option 020 module with:
  N4432-60003 4 x Type-N (f) ECal module

N4432A-xxx mixed-connector options:

Connector type	Port A option	Port B option	Port C option	Port D option
3.5 mm (f)	101	201	301	401
3.5 mm (m)	102	202	302	402
Type-N 50 Ω (f)	103	203	303	403
Type-N 50 Ω (m)	104	204	304	404

- N4690D Microwave ECal[4]: DC or 300 kHz to 18 GHz, 2-ports
  Includes:
  Option F0F: Both connectors are Type-N 50 Ω female on module
  Option M0F: 1 female and 1 male Type-N 50 Ω connector on module
  Option M0M: Both connectors are Type-N 50 Ω male on module
  Option 0DC: DC to 18 GHz
  Option 003: 300 kHz to 18 GHz
  Option 00A adds:
  - 85054-60037 Type-N (f) to Type-N (f) adapter
  - 85054-60038 Type-N (m) to Type-N (m) adapter

Cables

- N6314A 50 Ω Type-N RF cable, DC to 12.4 GHz
  Includes 8120-8862 one 610 mm (24 in) cable with male connectors
- N6315A 50 Ω Type-N RF cable, DC to 12.4 GHz
  Includes 8121-0027 one 610 mm (24 in) cable with both female and male connectors

Adapters

- 11853A 50 Ω Type-N accessory kit. Includes:
  1250-1472 Type-N (f) to Type-N (f) adapter (two included)
  1250-1475 Type-N (m) to Type-N (m) adapter (two included)
  11511A Type-N (f) short
  11512A Type-N (m) short
- 11878A Type-N to 3.5 mm adapter kit. Includes:
  1250-1744 3.5 mm (f) to 50 Ω Type-N (m) adapter
  1250-1743 3.5 mm (m) to 50 Ω Type-N (m) adapter
  1250-1745 3.5 mm (f) to 50 Ω Type-N (f) adapter
  1250-1750 3.5 mm (m) to 50 Ω Type-N (f) adapter
- 11524A 7 mm to Type-N (f) adapter
- 11525A 7 mm to Type-N (m) adapter
- 85130C[1,2,3] 3.5 mm to Type-N Includes:
  85054-60029 NMD-3.5 mm to Type-N (f)
  85054-60030 NMD-3.5 mm to Type-N (m)

1. Special rugged female connector specifically for connecting to the network analyzer test port, but does not mate with a standard male connector.
2. Recommended to connect H device to E5071C option xD5/xK5 which has NMD-3.5 mm (m) connectors.
3. Consider purchasing Keysight 20mm TORQUE WRENCH 8710-1764
4. The E5071C must have firmware revision B.14.0x or above for the operation with the N469xD series ECal.

For devices with 3.5 mm or SMA connectors

Mechanical calibration kits

- 85033E economy: DC to 9 GHz. Includes:
  85033-60016 3.5 mm (m) load
  85033-60017 3.5 mm (f) load
  85033-60018 3.5 mm (m) open
  85033-60019 3.5 mm (f) open
  85033-60020 3.5 mm (m) short
  85033-60021 3.5 mm (f) short
  8710-1761 torque wrench
  Option 85033E-100 adds:
  85027-60005 3.5 mm (f) to 3.5 mm (f) adapter
  Option 85033E-200 adds:
  85027-60007 3.5 mm (m) to 3.5 mm (m) adapter
  Option 85033E-300 adds:
  85027-60006 3.5 mm (m) to 3.5 mm (f) adapter
  Option 85033E-400 adds:
  1250-1744 3.5 mm (f) to 50 Ω Type-N (m) adapter
  1250-1743 3.5 mm (m) to 50 Ω Type-N (m) adapter
  1250-1745 3.5 mm (f) to 50 Ω Type-N (f) adapter
  1250-1750 3.5 mm (m) to 50 Ω Type-N (f) adapter
  Option 85033E-500 adds:
  1250-1746 3.5 mm (m) to 7 mm adapter (two included)
  1250-1747 3.5 mm (f) to 7 mm adapter (two included)

- 85052C precision TRL: DC to 26.5 GHz. Includes:
  00902-60003 3.5 mm (m) fixed load
  00902-60004 3.5 mm (f) fixed load
  85052-60006 3.5 mm (m) short
  85052-60007 3.5 mm (f) short
  85052-60008 3.5 mm (m) open
  85052-60009 3.5 mm (f) open
  85052-60032 3.5 mm (f) to 3.5 mm (f) adapter
  85052-60033 3.5 mm (m) to 3.5 mm (m) adapter
  85052-60034 3.5 mm (f) to 3.5 mm (m) adapter
  85052-60035 3.5 mm short TRL line
  85052-60036 3.5 mm long TRL line

- 85052D economy: DC to 26.5 GHz. Includes:
  00902-60003 3.5 mm (m) fixed load
  00902-60004 3.5 mm (f) fixed load
  85052-60006 3.5 mm (m) short
  85052-60007 3.5 mm (f) short
  85052-60008 3.5 mm (m) open
  85052-60009 3.5 mm (f) open
  85052-60012 3.5 mm (f) to 3.5 mm (f) adapter
  85052-60013 3.5 mm (f) to 3.5 mm (m) adapter
  85052-60014 3.5 mm (m) to 3.5 mm (m) adapter

Electronic calibration kits

- 85093C RF ECal: 300 kHz to 9 GHz, 2 ports
  Standard module includes:
  Option M0F with:
  85093-60008 3.5 mm (f) to 3.5 mm (m) ECal module
  Option 00F module with:
  85093-60010 3.5 mm (f) to 3.5 mm (f) ECal module
  Option 00M module with:
  85093-60009 3.5 mm (m) to 3.5 mm (m) ECal module
  Option 00A adds:
  85052-60012 3.5 mm (f) to 3.5 mm (f) adapter
  85052-60014 3.5 mm (m) to 3.5 mm (m) adapter

85093C-xxx mixed-connector options:

Port A option			Port B option					
Type	(f)	(m)	Type	(f)	(m)	Type	(f)	(m)
3.5 mm	101	102	Type-N	203	204	7-16	205	206

- N4431B Microwave ECal: 9 kHz to 13.5 GHz, 4 ports[1]
  Includes:
  Option 010 module with:
  N4431-60006 4 x 3.5 mm (f) ECal module

N4431B-xxx mixed-connector options:

Connector type	Port A option	Port B option	Port C option	Port D option
3.5 mm		201	301	401
3.5 mm (m)	102	202	302	402
Type-N 50 Ω (f)	103	203	303	403
Type-N 50 Ω (m)	104	204	304	404
7-16 (f)	105	205	305	405
7-16 (m)	106	206	306	406

- N4433A Microwave ECal: 300 kHz to 20 GHz, 4 ports
  Includes:
  Option 010 module with:
  N4433-60003 4 x 3.5 mm (f) ECal module

1. Performance from 9 kHz to 300 kHz is valid only for the E5071C ENA network analyzer with firmware version A.09.10 or higher.

N4433A-xxx mixed-connector options:

Connector type	Port A option	Port B option	Port C option	Port D option
3.5 mm (f)	101	201	301	401
3.5 mm (m)	102	202	302	402

- N4691D Microwave ECal[5]: DC or 300 kHz to 26.5 GHz, 2-ports Includes:
- **Option F0F:** Both connectors are 3.5 mm female on module
- **Option M0F:** 1 female and 1 male 3.5 mm connector on module
- **Option M0M:** Both connectors are 3.5 mm male on module
- **Option 0DC:** DC to 26.5 GHz
- **Option 003:** 300 kHz to 26.5 GHz
- **Option 00A adds:**
  - 85052-60012 3.5 mm (f) to 3.5 mm (f) adapter
  - 85052-60014 3.5 mm (m) to 3.5 mm (m) adapter

Cables

- 11500E[2, 3, 4] cable, APC 3.5 mm (m), DC to 26.5 GHz Includes: one 610 mm (24 in) with male connectors.
- 11500F[2, 3, 4] 150 cm cable, APC 3.5 mm (m), DC to 26.5 GHz Includes: one 1520 mm (60 in) with male connectors.
- 85131C[1, 4] single, semi-rigid: 3.5 mm (f) to PSC-3.5 mm (f), 81 cm, 32 inches
- 85131D[1. 4] set, semi-rigid: 85131-60009 one 3.5 mm (f) to 3.5 mm (m), 53 cm, 21 inches,
- 85131-60010 one 3.5 mm (f) to PSC-3.5 mm (f), 53 cm, 21 inches
- 85131E[1, 4] single, flexible: 3.5 mm (f) to PSC-3.5 mm (f), 96.5 cm, 38 inches
- 85131F[1, 4] set, flexible:
- 85131-60012 one 3.5 mm (f) to 3.5 mm (m), 62.2 cm, 24.5 inches
- 85131-60013 one 3.5 mm (f) to PSC-3.5 mm (f), 62.2 cm, 24.5 inches
- 85131G[1, 4] single, semi-rigid: 3.5 mm (f) to 3.5 mm (m), 53 cm, 21 inches
- 85131H[1, 4] single, flexible: 3.5 mm (f) to 3.5 mm (m), 62.2 cm, 24.5 inches
- 85134C[1] single, semi-rigid: PSC-3.5 mm (f) to 2.4 mm (f), 81 cm, 32 inches
- 85134D[1] set, semi-rigid:
- 85134-60002 one 2.4 mm (f) to PSC-3.5 mm (f), 53 cm, 21 inches
- 85134-60001 one 2.4 mm (f) to PSC-3.5 mm (m), 53 cm, 21 inches
- 85134E[1] single, flexible: PSC-3.5 mm (f) to 2.4 mm (f), 96 cm, 38 inches
- 85134F[1] set, flexible:
  85134-60004 one 2.4 mm (f) to PSC-3.5 mm (f), 61 cm, 24 inches
  85134-60003 one 2.4 mm (f) to PSC-3.5 mm (m), 61 cm, 24 inches
- 85134G[1] single, semi-rigid: 2.4 mm (f) to PSC-3.5 mm (m), 53 cm, 21 inches
- 85134H[1] single, flexible: 2.4 mm (f) to PSC-3.5 mm (m), 61 cm, 24 inches
- N4419AK20 single, flexible: 3.5 mm (m) to 3.5 mm (f), 91.4 cm, 36 inches
- Z5623A-K20 single, flexible: 3.5 mm (m) to 3.5 mm (m), 91.4 cm, 36 inches

Adapters

- 11853A 50 Ω Type-N accessory kit.
  Includes:
  1250-1472 Type-N (f) to Type-N (f) adapter (two included)
  1250-1475 Type-N (m) to Type-N (m) adapter (two included)
  85032-60009 Type-N (f) short
  85032-60008 Type-N (m) short
- 11878A Type-N to 3.5 mm adapter kit.
  Includes:
  1250-1744 3.5 mm (f) to 50 Ω Type-N (m) adapter
  1250-1743 3.5 mm (m) to 50 Ω Type-N (m) adapter
  1250-1745 3.5 mm (f) to 50 Ω Type-N (f) adapter
  1250-1750 3.5 mm (m) to 50 Ω Type-N (f) adapter
- 11524A 7 mm to Type-N (f) adapter
- 11525A 7 mm to Type-N (m) adapter
- 85130C[1] 3.5 mm to Type-N
  Includes:
  85054-60029 NMD-3.5 mm to Type-N (f)
  85054-60030 NMD-3.5 mm to Type-N (m)
- 85130D[1] 3.5 mm to 3.5 mm
  Includes:
  85130-60005 NMD-3.5 mm to PSC-3.5 mm (f)
  85130-60006 NMD-3.5 mm to PSC-3.5 mm (m)
- 85130F[1] 2.4 mm to 3.5 mm

1. Special rugged female connector specifically for connecting to the network analyzer test port, but does not mate with a standard male connector.
2. 1250-1744 3.5 mm (f) to 50 Ω Type-N (m) adapters are recommended to connect to the E5071C Option x4x, x6x, and x8x test ports, which have Type-N (f) connectors.
3. NMD-3.5 mm (f) to 3.5 mm (f), or 3.5 mm (f) to 3.5 mm (f) adapters are recommended to connect to the E5071C Option xD5, xK5, which have NMD-3.5 mm (m) connectors.
4. Consider purchasing Keysight 20mm TORQUE WRENCH 8710-1764
5. The E5071C must have firmware revision B.14.0x or above for the operation with the N469xD series ECal.

For devices with 75 Ω Type-N connectors

Mechanical calibration kits

- 85036B DC to 3 GHz, includes:
  00909-60019 75 Ω Type-N (m) broadband load
  00909-60020 75 Ω Type-N (f) broadband load
  85036-60012 75 Ω Type-N (m) short
  85036-60011 75 Ω Type-N (f) short
  85032-60007 75 Ω Type-N (m) open
  85032-20001 75 Ω Type-N (f) open body
  85036-60010 75 Ω Type-N (f) open center conductor extender
  85036-60013 75 Ω Type-N (m) to (m) adapter
  85036-60014 75 Ω Type-N (f) to (f) adapter
  85036-60015 75 Ω Type-N (m) to (f) adapter

- 85036E DC to 3 GHz, includes:
  00909-60019 75 Ω Type-N (m) broadband load
  85036-60016 75 Ω Type N (m) combined open/short

Adapters

- 11852B Minimum-loss pad
  Option 11852B-004 Type-N connectors, 50 Ω (m) to 75 Ω (f)

Calibration must be done with a 75 Ω calibration kit using an 11852B minimum-loss pad, and impedance conversion to 75 Ω using the ENA's fixture simulator function is required.

For devices with waveguide

Mechanical calibration kits

X Band
- X11644A standard, WR-90: 8.2 to 12.4 GHz.
  Includes:
  00896-60008 X-band standard section
  00910-60003 X-band termination
  11644-20018 X-band short
  11644-20021 X-band shim
- 85132F cable set (set of 2, flexible 7 mm to 3.5 mm, 62.9 cm each, 24.75 inches each)
- 85135F cable set (set of 2 , flexible, 7 mm to 2.4 mm, 53 cm each, 21 inches each)
- X281C adapter (included in calibration kit): WR-90 to 7 mm

P Band
- P11644A standard, WR-62: 12.4 to 18 GHz.
  Includes:
  00896-60007 P-band standard section
  00910-60002 P-band termination
  11644-20017 P-band short
  11644-20020 P-band shim
- 85132F cable set (set of 2, flexible, 7 mm to 3.5 mm, 62.9 cm each, 24.75 inches each)
- 85135F cable set (set of 2, flexible, 7 mm to 2.4 mm, 53 cm each, 21 inches each)
- P281C adapter (included in calibration kit): WR-62 to 7 mm

K Band
- K11644A standard, WR-42: 18 to 26.5 GHz.
  Includes:
  00896-60006 K-band standard section
  00910-60001 K-band termination
  11644-20016 K-band short
  11644-20019 K-band shim
- 85134F cable set (set of 2, flexible, 3.5 mm to 2.4 mm, 53 cm each, 21 inches each)
- K281C adapter (included in calibration kit):
  WR-42 to 3.5 mm (f)
  Option 012[1] WR-42 to 3.5 mm (m)

1. For this option order K281C-012.

Additional Accessories

Power limiters

- N9355B power limiter, 10 dBm limiting threshold, 10 MHz to 18 GHz, Type-N
- N9356B power limiter, 25 dBm limiting threshold, 10 MHz to 18 GHz, Type-N
- N9355C power limiter, 10 dBm limiting threshold, 10 MHz to 26.5 GHz, 3.5 mm
- N9356C power limiter, 25 dBm limiting threshold, 10 MHz to 26.5 GHz, 3.5 mm

DC blocks

- N9398C DC block, 16 V maximum working voltage, 50 kHz to 26.5 GHz, 3.5 mm
- N9399C DC block, 50 V maximum working voltage, 700 kHz to 26.5 GHz, 3.5 mm
- 11742A, 50 V maximum working voltage, 45 MHz to 26.5 GHz, 3.5 mm

Amplifiers

- 87405B pre-amplifier, 22 dB gain, 10 MHz to 4 GHz
- 87405C pre-amplifier, 25 dB gain, 100 MHz to 18 GHz
- 87415A amplifier, 25 dB gain, 2 to 8 GHz
- 83006A amplifier, 20 dB gain, 10 MHz to 26.5 GHz

Attenuators

- 8491A fixed attenuator, DC to 12.4 GHz, Type-N
- 8493A fixed attenuator, DC to 12.4 GHz, SMA

RF & microwave switches

- N1810TL SPDT switch, terminated, DC to 26.5 GHz
- N1810UL SPDT switch, unterminated, DC to 26.5 GHz
- 87104B SP4T switch, terminated, DC to 20 GHz
- 87106B SP6T switch, terminated, DC to 20 GHz
- 87222C transfer switch, DC to 26.5 GHz
- L7104B SP4T switch, terminated, DC to 20 GHz
- L7106B SP6T Switch, terminated, DC to 20 GHz
- L7222C transfer switch, DC to 26.5 GHz
- P9400C solid state PIN diode transfer switch, 100 MHz to 18 GHz
- P9402C SPDT solid state PIN diode switch, 100 MHz to 18 GHz
- P9404C SP4T solid state PIN diode switch, 100 MHz to 18 GHz
- U9397C SPDT solid state FET hybrid switch, 300 kHz to 18 GHz
- U9400C solid state FET hybrid transfer switch, 300 KHz to 18 GHz

1. Order the 82357B USB/GPIB interface to control a power meter by the E5071C.
2. To use the U200x USB power sensors for source power calibration, the E5071C ENA firmware version A.09.2x or higher is required.

Power meters and sensors[1]

Recommended for source output power calibration.

- E4416A[1] single-channel EPM-P series power meter
- E4417A[1] dual-channel EPM-P series power meter
- E4418B[1] single-channel EPM series power meter
- E4419B[1] dual-channel EPM series power meter
- N1911A[1] single-channel P-series power meter
- N1912A[1] dual-channel P-series power meter
- 8482A power sensor, 100 kHz to 4.2 GHz, Type-N (m), 100 mW
- E9304A-H18 power sensor, 9 kHz to 18 GHz, Type-N (m), 100 mW
- E4412A CW power sensor, 10 MHz to 18 GHz, Type-N (m), 200 mW
- E4413A CW power sensor, 50 MHz to 26.5 GHz, 3.5 mm (m), 200 mW
- N1921A power sensor 50 MHz to 18 GHz, Type-N (m)
- N1922A power sensor 50 MHz to 40 GHz, 2.4 mm (m)
- U2000A/B/H[2] USB power sensor, 10 MHz to 18 GHz, Type-N (m)
- U2001A/B/H[2] USB power sensor, 10 MHz to 6 GHz, Type-N (m)
- U2002A/H[2] USB power sensor, 50 MHz to 24 GHz, 3.5 mm (m)
- U2004A[2] USB power sensor, 9 kHz to 6 GHz, Type-N (m)

Probes

- N1021B 18 GHz differential TDR/TDT passive probe kit
- 85024A high-frequency probe, 300 kHz to 3 GHz

General accessories

System racks

- 1CN005A handle kit, may be ordered as option 1CN (two included)
- 1CM015A rack mount kit, for use without handles: may be ordered as option 1CM
- 1CP009A rack mount kit, for use with previously supplied handles; may be ordered as option 1CP
- E3663AC rack mount rail kit, for use with 1CM015A or 5188-4430
- 1181BZ test mobile system cart

Interface cables

The following GPIB cables can be used to connect the network analyzer with an external device such as a computer

- 10833A GPIB cable, 1.0 m (3.3 ft)
- 10833B GPIB cable, 2.0 m (6.6 ft)
- 10833C GPIB cable, 4.0 m (13.1 ft)
- 10833D GPIB cable, 0.5 m (1.6 ft)
- 82357B GPIB to USB interface, necessary to control a power meter or signal generator with the E5071C.

Monitors

- XGA-compatible monitor

Printers

- USB printers with Microsoft Windows printer driver

Other

- 8710-1764 WRENCH - TORQUE 8 IN/LB, 20 MM OPEN END

Upgrade kits

Upgrade kits for the E5071C

Protecting your hardware investment

The E5071C ENA network analyzer is a safe investment because of its flexibility. Easily upgrade any ENA software or hardware feature whenever you need that feature.

Ordering instructions

To upgrade an existing E5071C, order the corresponding upgrade kit model. For further information, visit:
http://www.keysight.com/find/ena_upgrades

Application and product notes

Introduction to the Fixture Simulator Function of the ENA Series RF Network Analyzers: Network De-embedding/Embedding and Balanced Measurement, Product Note E5070/71-1 Literature number 5988-4923EN

Evolution of Test Automation Using Built-in VBA with the ENA Series RF Network Analyzers, Product Note E5070/71-2
Literature number 5988-6192EN

On-wafer Multiport Calibration Using the ENA Series RF Network Analyzer with the Cascade Microtech Probing System, Product Note E5070/71-3
Literature number 5988-5886EN

In-Fixture Characterization Using the ENA Series RF Network Analyzer with Cascade Microtech Probing System, Product Note E5070/71-4
Literature number 5988-6522EN

Improve the Circuit Evaluation Efficiency of Wireless LAN Chip Set Design, Application Note 1463-2
Literature number 5988-9803EN

Impedance Characteristic Evaluation of SMD by Using the ENA with Inter-Continental Microwave (ICM)
Application Note 1463-5
Literature number 5989-0547EN

Accurate Mixer Measurements Using the Frequency-Offset Mode, Application Note 1463-6
Literature number 5989-1420EN

7 Reasons to Migrate from Your 8753 to an ENA Network Analyzer Application Note 1478
Literature number 5989-0206EN

Multiport Solutions for E5071C ENA RF Network Analyzers Using External Switches
Literature number 5989-7916EN

Advanced Measurement Techniques for RF Amplifiers Using Unique Functions of the Keysight E5071C ENA
Literature number 5989-6522EN

Measurement Wizard Assistant software for ENA/E5091A
Literature number 5989-4855EN

Comprehensive Multiport Solution for the ENA Network Analyzer
Literature number 5989-8737EN

E5071C ENA Option TDR Enhanced Time Domain Analysis Option
Literature number 5990-5237EN

Correlation between TDR oscilloscope and VNA generated time domain waveform
Literature number 5990-5238EN

Literature and information

E5071C ENA Vector Network Analyzer Brochure
Literature number 5989-5478EN

E5071C ENA Vector Network Analyzer Data Sheet
Literature number 5989-5479EN

Keysight Network Analyzer Selection Guide
Literature number 5989-7603EN

Key web resources for additional information on the ENA Series, visit:

www.keysight.com/find/ena

Learn more at: www.keysight.com

For more information on Keysight Technologies' products, applications or services, please contact your local Keysight office. The complete list is available at:
www.keysight.com/find/contactus

KEYSIGHT TECHNOLOGIES

This information is subject to change without notice. © Keysight Technologies, 2018 - 2020, Published in USA, March 30, 2020, 5989-5480EN